US011737754B2

(12) **United States Patent**
Shelton, IV et al.

(10) **Patent No.: US 11,737,754 B2**
(45) **Date of Patent: Aug. 29, 2023**

(54) **SURGICAL STAPLER WITH FLOATING ANVIL**

(71) Applicant: **Cilag GmbH International**, Zug (CH)

(72) Inventors: **Frederick E. Shelton, IV**, Hillsboro, OH (US); **Joseph E. Young**, Loveland, OH (US); **Taylor W. Aronhalt**, Loveland, OH (US); **Chester O. Baxter, III**, Loveland, OH (US)

(73) Assignee: **Cilag GmbH International**, Zug (CH)

(*) Notice: Subject to any disclaimer, the term of this patent is extended or adjusted under 35 U.S.C. 154(b) by 0 days.

(21) Appl. No.: **16/995,099**

(22) Filed: **Aug. 17, 2020**

(65) **Prior Publication Data**

US 2021/0030416 A1 Feb. 4, 2021

Related U.S. Application Data

(63) Continuation of application No. 15/793,382, filed on Oct. 25, 2017, now Pat. No. 10,743,877, which is a (Continued)

(51) **Int. Cl.**

A61B 17/072	(2006.01)
A61B 17/10	(2006.01)
A61B 17/068	(2006.01)
A61B 17/3209	(2006.01)
A61B 17/00	(2006.01)

(Continued)

(52) **U.S. Cl.**

CPC ***A61B 17/105*** (2013.01); ***A61B 17/068*** (2013.01); ***A61B 17/07207*** (2013.01); ***A61B 17/07292*** (2013.01); ***A61B 17/3209*** (2013.01); *A61B 2017/00115* (2013.01); *A61B 2017/0725* (2013.01); *A61B 2017/07235* (2013.01); *A61B 2017/07257* (2013.01);

(Continued)

(58) **Field of Classification Search**

CPC ... A61B 17/105; A61B 17/068; A61B 17/072; A61B 17/0729; A61B 17/3209

See application file for complete search history.

(56) **References Cited**

U.S. PATENT DOCUMENTS

66,052 A 6/1867 Smith
662,587 A 11/1900 Blake

(Continued)

FOREIGN PATENT DOCUMENTS

AU 2012200594 A1 2/2012
AU 2012203035 A1 6/2012

(Continued)

OTHER PUBLICATIONS

ASTM procedure D2240-00, "Standard Test Method for Rubber Property-Durometer Hardness," (Published Aug. 2000).

(Continued)

Primary Examiner — Nathaniel C Chukwurah

(57) **ABSTRACT**

A surgical instrument can include an anvil and, in addition, a staple cartridge support configured to support a staple cartridge. In various embodiments, the jaw can be moved toward the staple cartridge to deform staples contained within the staple cartridge. The anvil can be configured to be translated and/or rotated as the anvil is moved toward the staple cartridge. In certain embodiments, the anvil can be configured to float and adjust such that the anvil is moved downwardly in a level manner.

4 Claims, 156 Drawing Sheets

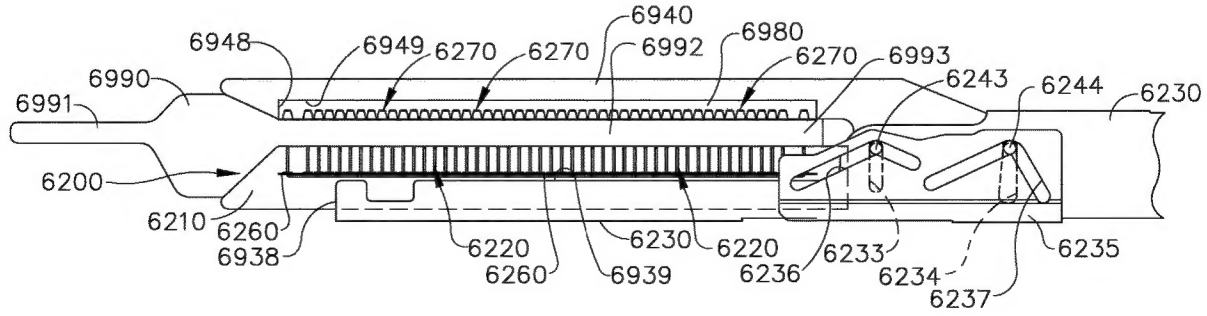

Related U.S. Application Data

continuation of application No. 14/549,219, filed on Nov. 20, 2014, now Pat. No. 10,064,624, which is a continuation-in-part of application No. 13/097,856, filed on Apr. 29, 2011, now abandoned, which is a continuation-in-part of application No. 12/894,369, filed on Sep. 30, 2010, now abandoned, said application No. 15/793,382 is a continuation of application No. 14/549,219, filed on Nov. 20, 2014, now Pat. No. 10,064,624, which is a continuation-in-part of application No. 13/242,029, filed on Sep. 23, 2011, now Pat. No. 8,893,949, which is a continuation-in-part of application No. 12/894,369, filed on Sep. 30, 2010, now abandoned.

(51) **Int. Cl.**
A61B 17/29 (2006.01)
A61B 90/00 (2016.01)

(52) **U.S. Cl.**
CPC *A61B 2017/07271* (2013.01); *A61B 2017/2933* (2013.01); *A61B 2090/0807* (2016.02)

(56) **References Cited**

U.S. PATENT DOCUMENTS

670,748	A	3/1901	Weddeler
719,487	A	2/1903	Minor
804,229	A	11/1905	Hutchinson
903,739	A	11/1908	Lesemann
951,393	A	3/1910	Hahn
1,075,556	A	10/1913	Fenoughty
1,082,105	A	12/1913	Anderson
1,188,721	A	6/1916	Bittner
1,306,107	A	6/1919	Elliott
1,314,601	A	9/1919	McCaskey
1,466,128	A	8/1923	Hallenbeck
1,677,337	A	7/1928	Grove
1,794,907	A	3/1931	Kelly
1,849,427	A	3/1932	Hook
1,912,783	A	6/1933	Meyer
1,944,116	A	1/1934	Stratman
1,954,048	A	4/1934	Jeffrey et al.
2,028,635	A	1/1936	Wappler
2,037,727	A	4/1936	La Chapelle
2,120,951	A	6/1938	Hodgman
2,132,295	A	10/1938	Hawkins
2,161,632	A	6/1939	Nattenheimer
D120,434	S	5/1940	Gold
2,211,117	A	8/1940	Hess
2,214,870	A	9/1940	West
2,224,108	A	12/1940	Ridgway
2,224,882	A	12/1940	Peck
2,256,295	A	9/1941	Schmid
2,318,379	A	5/1943	Davis et al.
2,329,440	A	9/1943	La Place
2,377,581	A	6/1945	Shaffrey
2,406,389	A	8/1946	Royal Lee
2,420,552	A	5/1947	Morrill
2,441,096	A	5/1948	Happe
2,448,741	A	9/1948	Scott et al.
2,450,527	A	10/1948	Smith
2,491,872	A	12/1949	Neuman
2,507,872	A	5/1950	Unsinger
2,526,902	A	10/1950	Rublee
2,527,256	A	10/1950	Jackson
2,578,686	A	12/1951	Fish
2,638,901	A	5/1953	Sugarbaker
2,674,149	A	4/1954	Benson
2,701,489	A	2/1955	Osborn
2,711,461	A	6/1955	Happe
2,724,289	A	11/1955	Wight
2,742,955	A	4/1956	Dominguez
2,804,848	A	9/1957	O'Farrell et al.
2,808,482	A	10/1957	Zanichkowsky et al.
2,825,178	A	3/1958	Hawkins
2,853,074	A	9/1958	Olson
2,856,192	A	10/1958	Schuster
2,887,004	A	5/1959	Stewart
2,957,353	A	10/1960	Lewis
2,959,974	A	11/1960	Emrick
3,026,744	A	3/1962	Rouse
3,032,769	A	5/1962	Palmer
3,035,256	A	5/1962	Egbert
3,060,972	A	10/1962	Sheldon
3,075,062	A	1/1963	Iaccarino
3,078,465	A	2/1963	Bobrov
3,079,606	A	3/1963	Bobrov et al.
3,080,564	A	3/1963	Strekopitov et al.
3,166,072	A	1/1965	Sullivan, Jr.
3,180,236	A	4/1965	Beckett
3,196,869	A	7/1965	Scholl
3,204,731	A	9/1965	Bent et al.
3,252,643	A	5/1966	Strekopytov et al.
3,266,494	A	8/1966	Brownrigg et al.
3,269,630	A	8/1966	Fleischer
3,269,631	A	8/1966	Takaro
3,275,211	A	9/1966	Hirsch et al.
3,315,863	A	4/1967	O'Dea
3,317,103	A	5/1967	Cullen et al.
3,317,105	A	5/1967	Astafjev et al.
3,357,296	A	12/1967	Lefever
3,359,978	A	12/1967	Smith, Jr.
3,377,893	A	4/1968	Shorb
3,480,193	A	11/1969	Ralston
3,490,675	A	1/1970	Green et al.
3,494,533	A	2/1970	Green et al.
3,499,591	A	3/1970	Green
3,503,396	A	3/1970	Pierie et al.
3,509,629	A	5/1970	Kidokoro
3,551,987	A	1/1971	Wilkinson
3,568,675	A	3/1971	Harvey
3,572,159	A	3/1971	Tschanz
3,583,393	A	6/1971	Takahashi
3,589,589	A	6/1971	Akopov
3,598,943	A	8/1971	Barrett
3,604,561	A	9/1971	Mallina et al.
3,608,549	A	9/1971	Merrill
3,616,278	A	10/1971	Jansen
3,618,842	A	11/1971	Bryan
3,635,394	A	1/1972	Natelson
3,638,652	A	2/1972	Kelley
3,640,317	A	2/1972	Panfili
3,643,851	A	2/1972	Green et al.
3,650,453	A	3/1972	Smith, Jr.
3,661,339	A	5/1972	Shimizu
3,661,666	A	5/1972	Foster et al.
3,662,939	A	5/1972	Bryan
3,685,250	A	8/1972	Henry et al.
3,688,966	A	9/1972	Perkins et al.
3,692,224	A	9/1972	Astafiev et al.
3,695,646	A	10/1972	Mommsen
3,709,221	A	1/1973	Riely
3,717,294	A	2/1973	Green
3,724,237	A	4/1973	Wood
3,726,755	A	4/1973	Shannon
3,727,904	A	4/1973	Gabbey
3,734,207	A	5/1973	Fishbein
3,740,994	A	6/1973	De Carlo, Jr.
3,744,495	A	7/1973	Johnson
3,746,002	A	7/1973	Haller
3,747,603	A	7/1973	Adler
3,747,692	A	7/1973	Davidson
3,751,902	A	8/1973	Kingsbury et al.
3,752,161	A	8/1973	Bent
3,797,494	A	3/1974	Zaffaroni
3,799,151	A	3/1974	Fukaumi et al.
3,808,452	A	4/1974	Hutchinson
3,815,476	A	6/1974	Green et al.
3,819,100	A	6/1974	Noiles et al.
3,821,919	A	7/1974	Knohl
3,822,818	A	7/1974	Strekopytov et al.

(56) **References Cited**

U.S. PATENT DOCUMENTS

3,825,007 A 7/1974 Rand
3,826,978 A 7/1974 Kelly
3,836,171 A 9/1974 Hayashi et al.
3,837,555 A 9/1974 Green
3,841,474 A 10/1974 Maier
3,851,196 A 11/1974 Hinds
3,863,639 A 2/1975 Kleaveland
3,863,940 A 2/1975 Cummings
3,883,624 A 5/1975 McKenzie et al.
3,885,491 A 5/1975 Curtis
3,887,393 A 6/1975 La Rue, Jr.
3,892,228 A 7/1975 Mitsui
3,894,174 A 7/1975 Cartun
3,899,829 A 8/1975 Storm et al.
3,902,247 A 9/1975 Fleer et al.
3,940,844 A 3/1976 Colby et al.
3,944,163 A 3/1976 Hayashi et al.
3,950,686 A 4/1976 Randall
3,952,747 A 4/1976 Kimmell, Jr.
3,955,581 A 5/1976 Spasiano et al.
3,959,879 A 6/1976 Sellers
RE28,932 E 8/1976 Noiles et al.
3,972,734 A 8/1976 King
3,973,179 A 8/1976 Weber et al.
3,981,051 A 9/1976 Brumlik
3,993,072 A 11/1976 Zaffaroni
3,999,110 A 12/1976 Ramstrom et al.
4,025,216 A 5/1977 Hives
4,027,746 A 6/1977 Kine
4,034,143 A 7/1977 Sweet
4,038,987 A 8/1977 Komiya
4,047,654 A 9/1977 Alvarado
4,054,108 A 10/1977 Gill
4,060,089 A 11/1977 Noiles
4,066,133 A 1/1978 Voss
4,085,337 A 4/1978 Moeller
4,100,820 A 7/1978 Evett
4,106,446 A 8/1978 Yamada et al.
4,106,620 A 8/1978 Brimmer et al.
4,108,211 A 8/1978 Tanaka
4,111,206 A 9/1978 Vishnevsky et al.
4,127,227 A 11/1978 Green
4,129,059 A 12/1978 Van Eck
4,132,146 A 1/1979 Uhlig
4,135,517 A 1/1979 Reale
4,149,461 A 4/1979 Simeth
4,154,122 A 5/1979 Severin
4,160,857 A 7/1979 Nardella et al.
4,169,476 A 10/1979 Hiltebrandt
4,169,990 A 10/1979 Lerdman
4,180,285 A 12/1979 Reneau
4,185,701 A 1/1980 Boys
4,190,042 A 2/1980 Sinnreich
4,198,734 A 4/1980 Brumlik
4,198,982 A 4/1980 Fortner et al.
4,203,444 A 5/1980 Bonnell et al.
4,207,898 A 6/1980 Becht
4,213,562 A 7/1980 Garrett et al.
4,226,242 A 10/1980 Jarvik
4,239,431 A 12/1980 Davini
4,241,861 A 12/1980 Fleischer
4,244,372 A 1/1981 Kapitanov et al.
4,250,436 A 2/1981 Weissman
4,250,817 A 2/1981 Michel
4,261,244 A 4/1981 Becht et al.
4,272,002 A 6/1981 Moshofsky
4,272,662 A 6/1981 Simpson
4,274,304 A 6/1981 Curtiss
4,274,398 A 6/1981 Scott, Jr.
4,275,813 A 6/1981 Noiles
4,278,091 A 7/1981 Borzone
4,282,573 A 8/1981 Imai et al.
4,289,131 A 9/1981 Mueller
4,289,133 A 9/1981 Rothfuss
4,290,542 A 9/1981 Fedotov et al.
D261,356 S 10/1981 Robinson
4,293,604 A 10/1981 Campbell
4,296,654 A 10/1981 Mercer
4,296,881 A 10/1981 Lee
4,304,236 A 12/1981 Conta et al.
4,305,539 A 12/1981 Korolkov et al.
4,312,363 A 1/1982 Rothfuss et al.
4,312,685 A 1/1982 Riedl
4,317,451 A 3/1982 Cerwin et al.
4,319,576 A 3/1982 Rothfuss
4,321,002 A 3/1982 Froehlich
4,321,746 A 3/1982 Grinage
4,328,839 A 5/1982 Lyons et al.
4,331,277 A 5/1982 Green
4,340,331 A 7/1982 Savino
4,347,450 A 8/1982 Colligan
4,348,603 A 9/1982 Huber
4,349,028 A 9/1982 Green
4,350,151 A 9/1982 Scott
4,353,371 A 10/1982 Cosman
4,357,940 A 11/1982 Muller
4,361,057 A 11/1982 Kochera
4,366,544 A 12/1982 Shima et al.
4,369,013 A 1/1983 Abildgaard et al.
4,373,147 A 2/1983 Carlson, Jr.
4,376,380 A 3/1983 Burgess
4,379,457 A 4/1983 Gravener et al.
4,380,312 A 4/1983 Landrus
4,382,326 A 5/1983 Rabuse
4,383,634 A 5/1983 Green
4,389,963 A 6/1983 Pearson
4,393,728 A 7/1983 Larson et al.
4,394,613 A 7/1983 Cole
4,396,139 A 8/1983 Hall et al.
4,397,311 A 8/1983 Kanshin et al.
4,402,445 A 9/1983 Green
4,406,621 A 9/1983 Bailey
4,408,692 A 10/1983 Sigel et al.
4,409,057 A 10/1983 Molenda et al.
4,415,112 A 11/1983 Green
4,416,276 A 11/1983 Newton et al.
4,417,890 A 11/1983 Dennehey et al.
4,421,264 A 12/1983 Arter et al.
4,423,456 A 12/1983 Zaidenweber
4,425,915 A 1/1984 Ivanov
4,428,376 A 1/1984 Mericle
4,429,695 A 2/1984 Green
4,430,997 A 2/1984 DiGiovanni et al.
4,434,796 A 3/1984 Karapetian et al.
4,438,659 A 3/1984 Desplats
4,442,964 A 4/1984 Becht
4,448,194 A 5/1984 DiGiovanni et al.
4,451,743 A 5/1984 Suzuki et al.
4,452,376 A 6/1984 Klieman et al.
4,454,887 A 6/1984 Kruger
4,459,519 A 7/1984 Erdman
4,461,305 A 7/1984 Cibley
4,467,805 A 8/1984 Fukuda
4,468,597 A 8/1984 Baumard et al.
4,469,481 A 9/1984 Kobayashi
4,470,414 A 9/1984 Imagawa et al.
4,471,780 A 9/1984 Menges et al.
4,471,781 A 9/1984 Di Giovanni et al.
4,473,077 A 9/1984 Noiles et al.
4,475,679 A 10/1984 Fleury, Jr.
4,476,864 A 10/1984 Tezel
4,478,220 A 10/1984 Di Giovanni et al.
4,480,641 A 11/1984 Failla et al.
4,481,458 A 11/1984 Lane
4,483,562 A 11/1984 Schoolman
4,485,816 A 12/1984 Krumme
4,485,817 A 12/1984 Swiggett
4,486,928 A 12/1984 Tucker et al.
4,488,523 A 12/1984 Shichman
4,489,875 A 12/1984 Crawford et al.
4,493,983 A 1/1985 Taggert
4,494,057 A 1/1985 Hotta
4,499,895 A 2/1985 Takayama
4,500,024 A 2/1985 DiGiovanni et al.

(56) **References Cited**

U.S. PATENT DOCUMENTS

D278,081 S 3/1985 Green
4,503,842 A 3/1985 Takayama
4,505,272 A 3/1985 Utyamyshev et al.
4,505,273 A 3/1985 Braun et al.
4,505,414 A 3/1985 Filipi
4,506,671 A 3/1985 Green
4,512,038 A 4/1985 Alexander et al.
4,514,477 A 4/1985 Kobayashi
4,520,817 A 6/1985 Green
4,522,327 A 6/1985 Korthoff et al.
4,523,707 A 6/1985 Blake, III et al.
4,526,174 A 7/1985 Froehlich
4,527,724 A 7/1985 Chow et al.
4,530,357 A 7/1985 Pawloski et al.
4,530,453 A 7/1985 Green
4,531,522 A 7/1985 Bedi et al.
4,532,927 A 8/1985 Miksza, Jr.
4,540,202 A 9/1985 Amphoux et al.
4,548,202 A 10/1985 Duncan
4,556,058 A 12/1985 Green
4,560,915 A 12/1985 Soultanian
4,565,109 A 1/1986 Tsay
4,565,189 A 1/1986 Mabuchi
4,566,620 A 1/1986 Green et al.
4,569,346 A 2/1986 Poirier
4,569,469 A 2/1986 Mongeon et al.
4,571,213 A 2/1986 Ishimoto
4,573,468 A 3/1986 Conta et al.
4,573,469 A 3/1986 Golden et al.
4,573,622 A 3/1986 Green et al.
4,576,165 A 3/1986 Green et al.
4,576,167 A 3/1986 Noiles
4,580,712 A 4/1986 Green
4,585,153 A 4/1986 Failla et al.
4,586,501 A 5/1986 Claracq
4,586,502 A 5/1986 Bedi et al.
4,589,416 A 5/1986 Green
4,589,582 A 5/1986 Bilotti
4,589,870 A 5/1986 Citrin et al.
4,591,085 A 5/1986 Di Giovanni
RE32,214 E 7/1986 Schramm
4,597,753 A 7/1986 Turley
4,600,037 A 7/1986 Hatten
4,604,786 A 8/1986 Howie, Jr.
4,605,001 A 8/1986 Rothfuss et al.
4,605,004 A 8/1986 Di Giovanni et al.
4,606,343 A 8/1986 Conta et al.
4,607,636 A 8/1986 Kula et al.
4,607,638 A 8/1986 Crainich
4,608,980 A 9/1986 Aihara
4,608,981 A 9/1986 Rothfuss et al.
4,610,250 A 9/1986 Green
4,610,383 A 9/1986 Rothfuss et al.
4,612,933 A 9/1986 Brinkerhoff et al.
D286,180 S 10/1986 Korthoff
D286,442 S 10/1986 Korthoff et al.
4,617,893 A 10/1986 Donner et al.
4,617,914 A 10/1986 Ueda
4,617,935 A 10/1986 Cartmell et al.
4,619,262 A 10/1986 Taylor
4,619,391 A 10/1986 Sharkany et al.
4,624,401 A 11/1986 Gassner et al.
D287,278 S 12/1986 Spreckelmeier
4,628,459 A 12/1986 Shinohara et al.
4,628,636 A 12/1986 Folger
4,629,107 A 12/1986 Fedotov et al.
4,632,290 A 12/1986 Green et al.
4,633,861 A 1/1987 Chow et al.
4,633,874 A 1/1987 Chow et al.
4,634,419 A 1/1987 Kreizman et al.
4,635,638 A 1/1987 Weintraub et al.
4,641,076 A 2/1987 Linden
4,642,618 A 2/1987 Johnson et al.
4,642,738 A 2/1987 Meller
4,643,173 A 2/1987 Bell et al.
4,643,731 A 2/1987 Eckenhoff
4,646,722 A 3/1987 Silverstein et al.
4,646,745 A 3/1987 Noiles
4,651,734 A 3/1987 Doss et al.
4,652,820 A 3/1987 Maresca
4,654,028 A 3/1987 Suma
4,655,222 A 4/1987 Florez et al.
4,662,555 A 5/1987 Thornton
4,663,874 A 5/1987 Sano et al.
4,664,305 A 5/1987 Blake, III et al.
4,665,916 A 5/1987 Green
4,667,674 A 5/1987 Korthoff et al.
4,669,647 A 6/1987 Storace
4,671,278 A 6/1987 Chin
4,671,280 A 6/1987 Dorband et al.
4,671,445 A 6/1987 Barker et al.
4,672,964 A 6/1987 Dee et al.
4,675,944 A 6/1987 Wells
4,676,245 A 6/1987 Fukuda
4,679,460 A 7/1987 Yoshigai
4,679,719 A 7/1987 Kramer
4,684,051 A 8/1987 Akopov et al.
4,688,555 A 8/1987 Wardle
4,691,703 A 9/1987 Auth et al.
4,693,248 A 9/1987 Failla
4,698,579 A 10/1987 Richter et al.
4,700,703 A 10/1987 Resnick et al.
4,705,038 A 11/1987 Sjostrom et al.
4,708,141 A 11/1987 Inoue et al.
4,709,120 A 11/1987 Pearson
4,715,520 A 12/1987 Roehr, Jr. et al.
4,719,917 A 1/1988 Barrows et al.
4,721,099 A 1/1988 Chikama
4,722,340 A 2/1988 Takayama et al.
4,724,840 A 2/1988 McVay et al.
4,726,247 A 2/1988 Hormann
4,727,308 A 2/1988 Huljak et al.
4,728,020 A 3/1988 Green et al.
4,728,876 A 3/1988 Mongeon et al.
4,729,260 A 3/1988 Dudden
4,730,726 A 3/1988 Holzwarth
4,741,336 A 5/1988 Failla et al.
4,743,214 A 5/1988 Tai-Cheng
4,744,363 A 5/1988 Hasson
4,747,820 A 5/1988 Hornlein et al.
4,750,902 A 6/1988 Wuchinich et al.
4,752,024 A 6/1988 Green et al.
4,754,909 A 7/1988 Barker et al.
4,755,070 A 7/1988 Cerutti
4,761,326 A 8/1988 Barnes et al.
4,763,669 A 8/1988 Jaeger
4,767,044 A 8/1988 Green
D297,764 S 9/1988 Hunt et al.
4,773,420 A 9/1988 Green
4,777,780 A 10/1988 Holzwarth
4,781,186 A 11/1988 Simpson et al.
4,784,137 A 11/1988 Kulik et al.
4,787,387 A 11/1988 Burbank, III et al.
4,788,485 A 11/1988 Kawagishi et al.
D298,967 S 12/1988 Hunt
4,788,978 A 12/1988 Strekopytov et al.
4,790,225 A 12/1988 Moody et al.
4,790,314 A 12/1988 Weaver
4,805,617 A 2/1989 Bedi et al.
4,805,823 A 2/1989 Rothfuss
4,807,628 A 2/1989 Peters et al.
4,809,695 A 3/1989 Gwathmey et al.
4,815,460 A 3/1989 Porat et al.
4,817,643 A 4/1989 Olson
4,817,847 A 4/1989 Redtenbacher et al.
4,819,495 A 4/1989 Hormann
4,819,853 A 4/1989 Green
4,821,939 A 4/1989 Green
4,827,552 A 5/1989 Bojar et al.
4,827,911 A 5/1989 Broadwin et al.
4,828,542 A 5/1989 Hermann
4,828,944 A 5/1989 Yabe et al.
4,830,855 A 5/1989 Stewart
4,832,158 A 5/1989 Farrar et al.

(56) **References Cited**

U.S. PATENT DOCUMENTS

4,833,937 A 5/1989 Nagano
4,834,096 A 5/1989 Oh et al.
4,834,720 A 5/1989 Blinkhorn
4,838,859 A 6/1989 Strassmann
4,844,068 A 7/1989 Arata et al.
4,848,637 A 7/1989 Pruitt
4,856,078 A 8/1989 Konopka
4,860,644 A 8/1989 Kohl et al.
4,862,891 A 9/1989 Smith
4,863,423 A 9/1989 Wallace
4,865,030 A 9/1989 Polyak
4,868,530 A 9/1989 Ahs
4,868,958 A 9/1989 Suzuki et al.
4,869,414 A 9/1989 Green et al.
4,869,415 A 9/1989 Fox
4,873,977 A 10/1989 Avant et al.
4,875,486 A 10/1989 Rapoport et al.
4,880,015 A 11/1989 Nierman
4,890,613 A 1/1990 Golden et al.
4,892,244 A 1/1990 Fox et al.
4,893,622 A 1/1990 Green et al.
4,894,051 A 1/1990 Shiber
4,896,584 A 1/1990 Stoll et al.
4,896,678 A 1/1990 Ogawa
4,900,303 A 2/1990 Lemelson
4,903,697 A 2/1990 Resnick et al.
4,909,789 A 3/1990 Taguchi et al.
4,915,100 A 4/1990 Green
4,919,679 A 4/1990 Averill et al.
4,921,479 A 5/1990 Grayzel
4,925,082 A 5/1990 Kim
4,928,699 A 5/1990 Sasai
4,930,503 A 6/1990 Pruitt
4,930,674 A 6/1990 Barak
4,931,047 A 6/1990 Broadwin et al.
4,931,737 A 6/1990 Hishiki
4,932,960 A 6/1990 Green et al.
4,933,800 A 6/1990 Yang
4,933,843 A 6/1990 Scheller et al.
D309,350 S 7/1990 Sutherland et al.
4,938,408 A 7/1990 Bedi et al.
4,941,623 A 7/1990 Pruitt
4,943,182 A 7/1990 Hoblingre
4,944,443 A 7/1990 Oddsen et al.
4,946,067 A 8/1990 Kelsall
4,948,327 A 8/1990 Crupi, Jr.
4,949,707 A 8/1990 LeVahn et al.
4,949,927 A 8/1990 Madocks et al.
4,950,268 A 8/1990 Rink
4,951,860 A 8/1990 Peters et al.
4,951,861 A 8/1990 Schulze et al.
4,954,960 A 9/1990 Lo et al.
4,955,959 A 9/1990 Tompkins et al.
4,957,212 A 9/1990 Duck et al.
4,962,681 A 10/1990 Yang
4,962,877 A 10/1990 Hervas
4,964,559 A 10/1990 Deniega et al.
4,964,863 A 10/1990 Kanshin et al.
4,965,709 A 10/1990 Ngo
4,970,656 A 11/1990 Lo et al.
4,973,274 A 11/1990 Hirukawa
4,973,302 A 11/1990 Armour et al.
4,976,173 A 12/1990 Yang
4,978,049 A 12/1990 Green
4,978,333 A 12/1990 Broadwin et al.
4,979,952 A 12/1990 Kubota et al.
4,984,564 A 1/1991 Yuen
4,986,808 A 1/1991 Broadwin et al.
4,987,049 A 1/1991 Komamura et al.
4,988,334 A 1/1991 Hornlein et al.
4,995,877 A 2/1991 Ams et al.
4,995,959 A 2/1991 Metzner
4,996,975 A 3/1991 Nakamura
5,001,649 A 3/1991 Lo et al.
5,002,543 A 3/1991 Bradshaw et al.
5,002,553 A 3/1991 Shiber
5,005,754 A 4/1991 Van Overloop
5,009,222 A 4/1991 Her
5,009,661 A 4/1991 Michelson
5,012,411 A 4/1991 Policastro et al.
5,014,898 A 5/1991 Heidrich
5,014,899 A 5/1991 Presty et al.
5,015,227 A 5/1991 Broadwin et al.
5,018,515 A 5/1991 Gilman
5,018,657 A 5/1991 Pedlick et al.
5,019,077 A 5/1991 De Bastiani et al.
5,024,652 A 6/1991 Dumenek et al.
5,024,671 A 6/1991 Tu et al.
5,025,559 A 6/1991 McCullough
5,027,834 A 7/1991 Pruitt
5,030,226 A 7/1991 Green et al.
5,031,814 A 7/1991 Tompkins et al.
5,033,552 A 7/1991 Hu
5,035,040 A 7/1991 Kerrigan et al.
5,037,018 A 8/1991 Matsuda et al.
5,038,109 A 8/1991 Goble et al.
5,038,247 A 8/1991 Kelley et al.
5,040,715 A 8/1991 Green et al.
5,042,707 A 8/1991 Taheri
5,056,953 A 10/1991 Marot et al.
5,060,658 A 10/1991 Dejter, Jr. et al.
5,061,269 A 10/1991 Muller
5,062,491 A 11/1991 Takeshima et al.
5,062,563 A 11/1991 Green et al.
5,065,929 A 11/1991 Schulze et al.
5,071,052 A 12/1991 Rodak et al.
5,071,430 A 12/1991 de Salis et al.
5,074,454 A 12/1991 Peters
5,077,506 A 12/1991 Krause
5,079,006 A 1/1992 Urquhart
5,080,556 A 1/1992 Carreno
5,083,695 A 1/1992 Foslien et al.
5,084,057 A 1/1992 Green et al.
5,088,979 A 2/1992 Filipi et al.
5,088,997 A 2/1992 Delahuerga et al.
5,089,606 A 2/1992 Cole et al.
5,094,247 A 3/1992 Hernandez et al.
5,098,004 A 3/1992 Kerrigan
5,098,360 A 3/1992 Hirota
5,100,042 A 3/1992 Gravener et al.
5,100,420 A 3/1992 Green et al.
5,100,422 A 3/1992 Berguer et al.
5,104,025 A 4/1992 Main et al.
5,104,397 A 4/1992 Vasconcelos et al.
5,104,400 A 4/1992 Berguer et al.
5,106,008 A 4/1992 Tompkins et al.
5,108,368 A 4/1992 Hammerslag et al.
5,109,722 A 5/1992 Hufnagle et al.
5,111,987 A 5/1992 Moeinzadeh et al.
5,116,349 A 5/1992 Aranyi
D327,323 S 6/1992 Hunt
5,119,009 A 6/1992 McCaleb et al.
5,122,156 A 6/1992 Granger et al.
5,124,990 A 6/1992 Williamson
5,129,570 A 7/1992 Schulze et al.
5,137,198 A 8/1992 Nobis et al.
5,139,513 A 8/1992 Segato
5,141,144 A 8/1992 Foslien et al.
5,142,932 A 9/1992 Moya et al.
5,151,102 A 9/1992 Kamiyama et al.
5,155,941 A 10/1992 Takahashi et al.
5,156,151 A 10/1992 Imran
5,156,315 A 10/1992 Green et al.
5,156,609 A 10/1992 Nakao et al.
5,156,614 A 10/1992 Green et al.
5,158,222 A 10/1992 Green et al.
5,158,567 A 10/1992 Green
D330,699 S 11/1992 Gill
5,163,598 A 11/1992 Peters et al.
5,163,842 A 11/1992 Nonomura
5,164,652 A 11/1992 Johnson et al.
5,168,605 A 12/1992 Bartlett
5,170,925 A 12/1992 Madden et al.
5,171,247 A 12/1992 Hughett et al.

(56) **References Cited**

U.S. PATENT DOCUMENTS

5,171,249 A 12/1992 Stefanchik et al.
5,171,253 A 12/1992 Klieman
5,173,053 A 12/1992 Swanson et al.
5,173,133 A 12/1992 Morin et al.
5,176,677 A 1/1993 Wuchinich
5,176,688 A 1/1993 Narayan et al.
5,181,514 A 1/1993 Solomon et al.
5,187,422 A 2/1993 Izenbaard et al.
5,188,102 A 2/1993 Idemoto et al.
5,188,111 A 2/1993 Yates et al.
5,188,126 A 2/1993 Fabian et al.
5,190,517 A 3/1993 Zieve et al.
5,190,544 A 3/1993 Chapman et al.
5,190,560 A 3/1993 Woods et al.
5,190,657 A 3/1993 Heagle et al.
5,192,288 A 3/1993 Thompson et al.
5,193,731 A 3/1993 Aranyi
5,195,505 A 3/1993 Josefsen
5,195,968 A 3/1993 Lundquist et al.
5,197,648 A 3/1993 Gingold
5,197,649 A 3/1993 Bessler et al.
5,197,966 A 3/1993 Sommerkamp
5,197,970 A 3/1993 Green et al.
5,200,280 A 4/1993 Karasa
5,201,750 A 4/1993 Hocherl et al.
5,205,459 A 4/1993 Brinkerhoff et al.
5,207,672 A 5/1993 Roth et al.
5,207,697 A 5/1993 Carusillo et al.
5,209,747 A 5/1993 Knoepfler
5,209,756 A 5/1993 Seedhom et al.
5,211,649 A 5/1993 Kohler et al.
5,211,655 A 5/1993 Hasson
5,217,457 A 6/1993 Delahuerga et al.
5,217,478 A 6/1993 Rexroth
5,219,111 A 6/1993 Bilotti et al.
5,220,269 A 6/1993 Chen et al.
5,221,036 A 6/1993 Takase
5,221,281 A 6/1993 Klicek
5,222,945 A 6/1993 Basnight
5,222,963 A 6/1993 Brinkerhoff et al.
5,222,975 A 6/1993 Crainich
5,222,976 A 6/1993 Yoon
5,223,675 A 6/1993 Taft
D338,729 S 8/1993 Sprecklemeier et al.
5,234,447 A 8/1993 Kaster et al.
5,236,269 A 8/1993 Handy
5,236,424 A 8/1993 Imran
5,236,440 A 8/1993 Hlavacek
5,236,629 A 8/1993 Mahabadi et al.
5,239,981 A 8/1993 Anapliotis
5,240,163 A 8/1993 Stein et al.
5,242,456 A 9/1993 Nash et al.
5,242,457 A 9/1993 Akopov et al.
5,244,462 A 9/1993 Delahuerga et al.
5,246,156 A 9/1993 Rothfuss et al.
5,246,443 A 9/1993 Mai
5,251,801 A 10/1993 Ruckdeschel et al.
5,253,793 A 10/1993 Green et al.
5,258,007 A 11/1993 Spetzler et al.
5,258,008 A 11/1993 Wilk
5,258,009 A 11/1993 Conners
5,258,010 A 11/1993 Green et al.
5,258,012 A 11/1993 Luscombe et al.
5,259,366 A 11/1993 Reydel et al.
5,259,835 A 11/1993 Clark et al.
5,260,637 A 11/1993 Pizzi
5,261,135 A 11/1993 Mitchell
5,261,877 A 11/1993 Fine et al.
5,261,922 A 11/1993 Hood
5,263,629 A 11/1993 Trumbull et al.
5,263,937 A 11/1993 Shipp
5,263,973 A 11/1993 Cook
5,264,218 A 11/1993 Rogozinski
5,268,622 A 12/1993 Philipp
5,269,794 A 12/1993 Rexroth
5,271,543 A 12/1993 Grant et al.
5,271,544 A 12/1993 Fox et al.
RE34,519 E 1/1994 Fox et al.
5,275,322 A 1/1994 Brinkerhoff et al.
5,275,323 A 1/1994 Schulze et al.
5,275,608 A 1/1994 Forman et al.
5,279,416 A 1/1994 Malec et al.
5,281,216 A 1/1994 Klicek
5,281,400 A 1/1994 Berry, Jr.
5,282,806 A 2/1994 Haber et al.
5,282,826 A 2/1994 Quadri
5,282,829 A 2/1994 Hermes
5,284,128 A 2/1994 Hart
5,285,381 A 2/1994 Iskarous et al.
5,285,945 A 2/1994 Brinkerhoff et al.
5,286,253 A 2/1994 Fucci
5,289,963 A 3/1994 McGarry et al.
5,290,271 A 3/1994 Jernberg
5,290,310 A 3/1994 Makower et al.
5,291,133 A 3/1994 Gokhale et al.
5,292,053 A 3/1994 Bilotti et al.
5,293,024 A 3/1994 Sugahara et al.
5,297,714 A 3/1994 Kramer
5,300,087 A 4/1994 Knoepfler
5,302,148 A 4/1994 Heinz
5,303,606 A 4/1994 Kokinda
5,304,204 A 4/1994 Bregen
D347,474 S 5/1994 Olson
5,307,976 A 5/1994 Olson et al.
5,308,353 A 5/1994 Beurrier
5,308,358 A 5/1994 Bond et al.
5,308,576 A 5/1994 Green et al.
5,309,387 A 5/1994 Mori et al.
5,309,927 A 5/1994 Welch
5,312,023 A 5/1994 Green et al.
5,312,024 A 5/1994 Grant et al.
5,312,329 A 5/1994 Beaty et al.
5,313,935 A 5/1994 Kortenbach et al.
5,313,967 A 5/1994 Lieber et al.
5,314,424 A 5/1994 Nicholas
5,314,445 A 5/1994 Heidmueller et al.
5,314,466 A 5/1994 Stern et al.
5,318,221 A 6/1994 Green et al.
5,318,589 A 6/1994 Lichtman
5,320,627 A 6/1994 Sorensen et al.
D348,930 S 7/1994 Olson
5,326,013 A 7/1994 Green et al.
5,329,923 A 7/1994 Lundquist
5,330,486 A 7/1994 Wilk
5,330,487 A 7/1994 Thornton et al.
5,330,502 A 7/1994 Hassler et al.
5,331,971 A 7/1994 Bales et al.
5,332,142 A 7/1994 Robinson et al.
5,333,422 A 8/1994 Warren et al.
5,333,772 A 8/1994 Rothfuss et al.
5,333,773 A 8/1994 Main et al.
5,334,183 A 8/1994 Wuchinich
5,336,130 A 8/1994 Ray
5,336,229 A 8/1994 Noda
5,336,232 A 8/1994 Green et al.
5,338,317 A 8/1994 Hasson et al.
5,339,799 A 8/1994 Kami et al.
5,341,724 A 8/1994 Vatel
5,341,807 A 8/1994 Nardella
5,341,810 A 8/1994 Dardel
5,342,380 A 8/1994 Hood
5,342,381 A 8/1994 Tidemand
5,342,385 A 8/1994 Norelli et al.
5,342,395 A 8/1994 Jarrett et al.
5,342,396 A 8/1994 Cook
5,343,382 A 8/1994 Hale et al.
5,343,391 A 8/1994 Mushabac
5,344,059 A 9/1994 Green et al.
5,344,060 A 9/1994 Gravener et al.
5,344,454 A 9/1994 Clarke et al.
5,346,504 A 9/1994 Ortiz et al.
5,348,259 A 9/1994 Blanco et al.
5,350,104 A 9/1994 Main et al.
5,350,355 A 9/1994 Sklar

(56) **References Cited**

U.S. PATENT DOCUMENTS

5,350,388 A 9/1994 Epstein
5,350,391 A 9/1994 Iacovelli
5,350,400 A 9/1994 Esposito et al.
5,352,229 A 10/1994 Goble et al.
5,352,235 A 10/1994 Koros et al.
5,352,238 A 10/1994 Green et al.
5,353,798 A 10/1994 Sieben
5,354,215 A 10/1994 Viracola
5,354,250 A 10/1994 Christensen
5,354,303 A 10/1994 Spaeth et al.
5,355,897 A 10/1994 Pietrafitta et al.
5,356,006 A 10/1994 Alpern et al.
5,356,064 A 10/1994 Green et al.
5,358,506 A 10/1994 Green et al.
5,358,510 A 10/1994 Luscombe et al.
5,359,231 A 10/1994 Flowers et al.
D352,780 S 11/1994 Glaeser et al.
5,359,993 A 11/1994 Slater et al.
5,360,305 A 11/1994 Kerrigan
5,360,428 A 11/1994 Hutchinson, Jr.
5,361,902 A 11/1994 Abidin et al.
5,364,001 A 11/1994 Bryan
5,364,002 A 11/1994 Green et al.
5,364,003 A 11/1994 Williamson, IV
5,366,133 A 11/1994 Geiste
5,366,134 A 11/1994 Green et al.
5,366,479 A 11/1994 McGarry et al.
5,368,015 A 11/1994 Wilk
5,368,592 A 11/1994 Stern et al.
5,368,599 A 11/1994 Hirsch et al.
5,369,565 A 11/1994 Chen et al.
5,370,645 A 12/1994 Klicek et al.
5,372,124 A 12/1994 Takayama et al.
5,372,596 A 12/1994 Klicek et al.
5,372,602 A 12/1994 Burke
5,374,277 A 12/1994 Hassler
5,375,588 A 12/1994 Yoon
5,376,095 A 12/1994 Ortiz
5,379,933 A 1/1995 Green et al.
5,381,649 A 1/1995 Webb
5,381,782 A 1/1995 DeLaRama et al.
5,381,943 A 1/1995 Allen et al.
5,382,247 A 1/1995 Cimino et al.
5,383,460 A 1/1995 Jang et al.
5,383,738 A 1/1995 Herbermann
5,383,874 A 1/1995 Jackson et al.
5,383,880 A 1/1995 Hooven
5,383,881 A 1/1995 Green et al.
5,383,882 A 1/1995 Buess et al.
5,383,888 A 1/1995 Zvenyatsky et al.
5,383,895 A 1/1995 Holmes et al.
5,388,568 A 2/1995 van der Heide
5,389,072 A 2/1995 Imran
5,389,098 A 2/1995 Tsuruta et al.
5,389,102 A 2/1995 Green et al.
5,389,104 A 2/1995 Hahnen et al.
5,391,180 A 2/1995 Tovey et al.
5,392,979 A 2/1995 Green et al.
5,395,030 A 3/1995 Kuramoto et al.
5,395,033 A 3/1995 Byrne et al.
5,395,034 A 3/1995 Allen et al.
5,395,312 A 3/1995 Desai
5,395,384 A 3/1995 Duthoit et al.
5,397,046 A 3/1995 Savage et al.
5,397,324 A 3/1995 Carroll et al.
5,400,267 A 3/1995 Denen et al.
5,403,276 A 4/1995 Schechter et al.
5,403,312 A 4/1995 Yates et al.
5,404,106 A 4/1995 Matsuda
5,404,870 A 4/1995 Brinkerhoff et al.
5,404,960 A 4/1995 Wada et al.
5,405,072 A 4/1995 Zlock et al.
5,405,073 A 4/1995 Porter
5,405,344 A 4/1995 Williamson et al.
5,405,360 A 4/1995 Tovey
5,407,293 A 4/1995 Crainich
5,408,409 A 4/1995 Glassman et al.
5,409,498 A 4/1995 Braddock et al.
5,409,703 A 4/1995 McAnalley et al.
D357,981 S 5/1995 Green et al.
5,411,481 A 5/1995 Allen et al.
5,411,508 A 5/1995 Bessler et al.
5,413,107 A 5/1995 Oakley et al.
5,413,267 A 5/1995 Solyntjes et al.
5,413,268 A 5/1995 Green et al.
5,413,272 A 5/1995 Green et al.
5,413,573 A 5/1995 Koivukangas
5,415,334 A 5/1995 Williamson et al.
5,415,335 A 5/1995 Knodell, Jr.
5,417,203 A 5/1995 Tovey et al.
5,417,361 A 5/1995 Williamson, IV
5,419,766 A 5/1995 Chang et al.
5,421,829 A 6/1995 Olichney et al.
5,422,567 A 6/1995 Matsunaga
5,423,471 A 6/1995 Mastri et al.
5,423,809 A 6/1995 Klicek
5,423,835 A 6/1995 Green et al.
5,425,355 A 6/1995 Kulick
5,425,745 A 6/1995 Green et al.
5,427,298 A 6/1995 Tegtmeier
5,431,322 A 7/1995 Green et al.
5,431,323 A 7/1995 Smith et al.
5,431,645 A 7/1995 Smith et al.
5,431,654 A 7/1995 Nic
5,431,666 A 7/1995 Sauer et al.
5,431,668 A 7/1995 Burbank, III et al.
5,433,721 A 7/1995 Hooven et al.
5,437,681 A 8/1995 Meade et al.
5,438,302 A 8/1995 Goble
5,438,997 A 8/1995 Sieben et al.
5,439,155 A 8/1995 Viola
5,439,156 A 8/1995 Grant et al.
5,439,479 A 8/1995 Shichman et al.
5,441,191 A 8/1995 Linden
5,441,193 A 8/1995 Gravener
5,441,483 A 8/1995 Avitall
5,441,494 A 8/1995 Ortiz
5,441,499 A 8/1995 Fritzsch
5,443,197 A 8/1995 Malis et al.
5,443,198 A 8/1995 Viola et al.
5,443,463 A 8/1995 Stern et al.
5,444,113 A 8/1995 Sinclair et al.
5,445,155 A 8/1995 Sieben
5,445,304 A 8/1995 Plyley et al.
5,445,604 A 8/1995 Lang
5,445,644 A 8/1995 Pietrafitta et al.
5,446,646 A 8/1995 Miyazaki
5,447,265 A 9/1995 Vidal et al.
5,447,417 A 9/1995 Kuhl et al.
5,447,513 A 9/1995 Davison et al.
5,449,355 A 9/1995 Rhum et al.
5,449,365 A 9/1995 Green et al.
5,449,370 A 9/1995 Vaitekunas
5,452,836 A 9/1995 Huitema et al.
5,452,837 A 9/1995 Williamson, IV et al.
5,454,378 A 10/1995 Palmer et al.
5,454,822 A 10/1995 Schob et al.
5,454,824 A 10/1995 Fontayne et al.
5,454,827 A 10/1995 Aust et al.
5,456,401 A 10/1995 Green et al.
5,456,917 A 10/1995 Wise et al.
5,458,279 A 10/1995 Plyley
5,458,579 A 10/1995 Chodorow et al.
5,462,215 A 10/1995 Viola et al.
5,464,013 A 11/1995 Lemelson
5,464,144 A 11/1995 Guy et al.
5,464,300 A 11/1995 Crainich
5,465,819 A 11/1995 Weilant et al.
5,465,894 A 11/1995 Clark et al.
5,465,895 A 11/1995 Knodel et al.
5,465,896 A 11/1995 Allen et al.
5,466,020 A 11/1995 Page et al.
5,467,911 A 11/1995 Tsuruta et al.
5,468,253 A 11/1995 Bezwada et al.

(56) **References Cited**

U.S. PATENT DOCUMENTS

5,470,006 A 11/1995 Rodak
5,470,007 A 11/1995 Plyley et al.
5,470,008 A 11/1995 Rodak
5,470,009 A 11/1995 Rodak
5,470,010 A 11/1995 Rothfuss et al.
5,471,129 A 11/1995 Mann
5,472,132 A 12/1995 Savage et al.
5,472,442 A 12/1995 Klicek
5,473,204 A 12/1995 Temple
5,474,057 A 12/1995 Makower et al.
5,474,223 A 12/1995 Viola et al.
5,474,566 A 12/1995 Alesi et al.
5,474,570 A 12/1995 Kockerling et al.
5,474,738 A 12/1995 Nichols et al.
5,476,206 A 12/1995 Green et al.
5,476,479 A 12/1995 Green et al.
5,476,481 A 12/1995 Schondorf
5,478,003 A 12/1995 Green et al.
5,478,308 A 12/1995 Cartmell et al.
5,478,354 A 12/1995 Tovey et al.
5,480,089 A 1/1996 Blewett
5,480,409 A 1/1996 Riza
5,482,197 A 1/1996 Green et al.
5,483,952 A 1/1996 Aranyi
5,484,095 A 1/1996 Green et al.
5,484,398 A 1/1996 Stoddard
5,484,451 A 1/1996 Akopov et al.
5,485,947 A 1/1996 Olson et al.
5,485,952 A 1/1996 Fontayne
5,487,377 A 1/1996 Smith et al.
5,487,499 A 1/1996 Sorrentino et al.
5,487,500 A 1/1996 Knodel et al.
5,489,058 A 2/1996 Plyley et al.
5,489,256 A 2/1996 Adair
5,489,290 A 2/1996 Furnish
5,490,819 A 2/1996 Nicholas et al.
5,492,671 A 2/1996 Krafft
5,496,312 A 3/1996 Klicek
5,496,317 A 3/1996 Goble et al.
5,497,933 A 3/1996 DeFonzo et al.
5,498,164 A 3/1996 Ward et al.
5,498,838 A 3/1996 Furman
5,501,654 A 3/1996 Failla et al.
5,503,320 A 4/1996 Webster et al.
5,503,635 A 4/1996 Sauer et al.
5,503,638 A 4/1996 Cooper et al.
5,505,363 A 4/1996 Green et al.
5,507,425 A 4/1996 Ziglioli
5,507,426 A 4/1996 Young et al.
5,507,773 A 4/1996 Huitema et al.
5,509,596 A 4/1996 Green et al.
5,509,916 A 4/1996 Taylor
5,509,918 A 4/1996 Romano
5,511,564 A 4/1996 Wilk
5,514,129 A 5/1996 Smith
5,514,149 A 5/1996 Green et al.
5,514,157 A 5/1996 Nicholas et al.
5,518,163 A 5/1996 Hooven
5,518,164 A 5/1996 Hooven
5,520,609 A 5/1996 Moll et al.
5,520,634 A 5/1996 Fox et al.
5,520,678 A 5/1996 Heckele et al.
5,520,700 A 5/1996 Beyar et al.
5,522,817 A 6/1996 Sander et al.
5,522,831 A 6/1996 Sleister et al.
5,527,264 A 6/1996 Moll et al.
5,527,320 A 6/1996 Carruthers et al.
5,529,235 A 6/1996 Boiarski et al.
D372,086 S 7/1996 Grasso et al.
5,531,305 A 7/1996 Roberts et al.
5,531,744 A 7/1996 Nardella et al.
5,531,856 A 7/1996 Moll et al.
5,533,521 A 7/1996 Granger
5,533,581 A 7/1996 Barth et al.
5,533,661 A 7/1996 Main et al.
5,535,934 A 7/1996 Boiarski et al.
5,535,935 A 7/1996 Vidal et al.
5,535,937 A 7/1996 Boiarski et al.
5,540,375 A 7/1996 Bolanos et al.
5,540,705 A 7/1996 Meade et al.
5,541,376 A 7/1996 Ladtkow et al.
5,541,489 A 7/1996 Dunstan
5,542,594 A 8/1996 McKean et al.
5,542,945 A 8/1996 Fritzsch
5,542,949 A 8/1996 Yoon
5,543,119 A 8/1996 Sutter et al.
5,543,695 A 8/1996 Culp et al.
5,544,802 A 8/1996 Crainich
5,547,117 A 8/1996 Hamblin et al.
5,549,583 A 8/1996 Sanford et al.
5,549,621 A 8/1996 Bessler et al.
5,549,627 A 8/1996 Kieturakis
5,549,628 A 8/1996 Cooper et al.
5,549,637 A 8/1996 Crainich
5,551,622 A 9/1996 Yoon
5,553,624 A 9/1996 Francese et al.
5,553,675 A 9/1996 Pitzen et al.
5,553,765 A 9/1996 Knodel et al.
5,554,148 A 9/1996 Aebischer et al.
5,554,169 A 9/1996 Green et al.
5,556,020 A 9/1996 Hou
5,556,416 A 9/1996 Clark et al.
5,558,533 A 9/1996 Hashizawa et al.
5,558,665 A 9/1996 Kieturakis
5,558,671 A 9/1996 Yates
5,560,530 A 10/1996 Bolanos et al.
5,560,532 A 10/1996 DeFonzo et al.
5,561,881 A 10/1996 Klinger et al.
5,562,239 A 10/1996 Boiarski et al.
5,562,241 A 10/1996 Knodel et al.
5,562,682 A 10/1996 Oberlin et al.
5,562,690 A 10/1996 Green et al.
5,562,694 A 10/1996 Sauer et al.
5,562,701 A 10/1996 Huitema et al.
5,562,702 A 10/1996 Huitema et al.
5,563,481 A 10/1996 Krause
5,564,615 A 10/1996 Bishop et al.
5,569,161 A 10/1996 Ebling et al.
5,569,270 A 10/1996 Weng
5,569,284 A 10/1996 Young et al.
5,571,090 A 11/1996 Sherts
5,571,100 A 11/1996 Goble et al.
5,571,116 A 11/1996 Bolanos et al.
5,571,285 A 11/1996 Chow et al.
5,571,488 A 11/1996 Beerstecher et al.
5,573,169 A 11/1996 Green et al.
5,573,543 A 11/1996 Akopov et al.
5,574,431 A 11/1996 McKeown et al.
5,575,054 A 11/1996 Klinzing et al.
5,575,789 A 11/1996 Bell et al.
5,575,799 A 11/1996 Bolanos et al.
5,575,803 A 11/1996 Cooper et al.
5,575,805 A 11/1996 Li
5,577,654 A 11/1996 Bishop
5,578,052 A 11/1996 Koros et al.
5,579,978 A 12/1996 Green et al.
5,580,067 A 12/1996 Hamblin et al.
5,582,611 A 12/1996 Tsuruta et al.
5,582,617 A 12/1996 Klieman et al.
5,582,907 A 12/1996 Pall
5,583,114 A 12/1996 Barrows et al.
5,584,425 A 12/1996 Savage et al.
5,586,711 A 12/1996 Plyley et al.
5,588,579 A 12/1996 Schnut et al.
5,588,580 A 12/1996 Paul et al.
5,588,581 A 12/1996 Conlon et al.
5,591,170 A 1/1997 Spievack et al.
5,591,187 A 1/1997 Dekel
5,597,107 A 1/1997 Knodel et al.
5,599,151 A 2/1997 Daum et al.
5,599,279 A 2/1997 Slotman et al.
5,599,344 A 2/1997 Paterson
5,599,350 A 2/1997 Schulze et al.
5,599,852 A 2/1997 Scopelianos et al.

(56) **References Cited**

U.S. PATENT DOCUMENTS

5,601,224 A 2/1997 Bishop et al.
5,601,573 A 2/1997 Fogelberg et al.
5,601,604 A 2/1997 Vincent
5,602,449 A 2/1997 Krause et al.
5,603,443 A 2/1997 Clark et al.
5,605,272 A 2/1997 Witt et al.
5,605,273 A 2/1997 Hamblin et al.
5,607,094 A 3/1997 Clark et al.
5,607,095 A 3/1997 Smith et al.
5,607,303 A 3/1997 Nakamura
5,607,433 A 3/1997 Polla et al.
5,607,436 A 3/1997 Pratt et al.
5,607,450 A 3/1997 Zvenyatsky et al.
5,607,474 A 3/1997 Athanasiou et al.
5,609,285 A 3/1997 Grant et al.
5,609,601 A 3/1997 Kolesa et al.
5,611,709 A 3/1997 McAnulty
5,611,813 A 3/1997 Lichtman
5,613,499 A 3/1997 Palmer et al.
5,613,937 A 3/1997 Garrison et al.
5,613,966 A 3/1997 Makower et al.
5,614,887 A 3/1997 Buchbinder
5,615,820 A 4/1997 Viola
5,618,294 A 4/1997 Aust et al.
5,618,303 A 4/1997 Marlow et al.
5,618,307 A 4/1997 Donlon et al.
5,619,992 A 4/1997 Guthrie et al.
5,620,289 A 4/1997 Curry
5,620,326 A 4/1997 Younker
5,620,452 A 4/1997 Yoon
5,624,398 A 4/1997 Smith et al.
5,624,452 A 4/1997 Yates
5,626,587 A 5/1997 Bishop et al.
5,626,595 A 5/1997 Sklar et al.
5,626,979 A 5/1997 Mitsui et al.
5,628,446 A 5/1997 Geiste et al.
5,628,743 A 5/1997 Cimino
5,628,745 A 5/1997 Bek
5,630,539 A 5/1997 Plyley et al.
5,630,540 A 5/1997 Blewett
5,630,541 A 5/1997 Williamson, IV et al.
5,630,782 A 5/1997 Adair
5,631,973 A 5/1997 Green
5,632,432 A 5/1997 Schulze et al.
5,632,433 A 5/1997 Grant et al.
5,633,374 A 5/1997 Humphrey et al.
5,634,584 A 6/1997 Okorocha et al.
5,636,779 A 6/1997 Palmer
5,636,780 A 6/1997 Green et al.
5,637,110 A 6/1997 Pennybacker et al.
5,638,582 A 6/1997 Klatt et al.
5,639,008 A 6/1997 Gallagher et al.
D381,077 S 7/1997 Hunt
5,643,291 A 7/1997 Pier et al.
5,643,293 A 7/1997 Kogasaka et al.
5,643,294 A 7/1997 Tovey et al.
5,643,319 A 7/1997 Green et al.
5,645,209 A 7/1997 Green et al.
5,647,526 A 7/1997 Green et al.
5,647,869 A 7/1997 Goble et al.
5,649,937 A 7/1997 Bito et al.
5,649,956 A 7/1997 Jensen et al.
5,651,491 A 7/1997 Heaton et al.
5,651,762 A 7/1997 Bridges
5,651,821 A 7/1997 Uchida
5,653,373 A 8/1997 Green et al.
5,653,374 A 8/1997 Young et al.
5,653,677 A 8/1997 Okada et al.
5,653,721 A 8/1997 Knodel et al.
5,653,748 A 8/1997 Strecker
5,655,698 A 8/1997 Yoon
5,656,917 A 8/1997 Theobald
5,657,417 A 8/1997 Di Troia
5,657,429 A 8/1997 Wang et al.
5,657,921 A 8/1997 Young et al.
5,658,238 A 8/1997 Suzuki et al.
5,658,281 A 8/1997 Heard
5,658,298 A 8/1997 Vincent et al.
5,658,300 A 8/1997 Bito et al.
5,658,307 A 8/1997 Exconde
5,662,258 A 9/1997 Knodel et al.
5,662,260 A 9/1997 Yoon
5,662,662 A 9/1997 Bishop et al.
5,662,667 A 9/1997 Knodel
5,664,404 A 9/1997 Ivanov et al.
5,665,085 A 9/1997 Nardella
5,667,517 A 9/1997 Hooven
5,667,526 A 9/1997 Levin
5,667,527 A 9/1997 Cook
5,667,864 A 9/1997 Landoll
5,669,544 A 9/1997 Schulze et al.
5,669,904 A 9/1997 Platt, Jr. et al.
5,669,907 A 9/1997 Platt, Jr. et al.
5,669,918 A 9/1997 Balazs et al.
5,672,945 A 9/1997 Krause
5,673,840 A 10/1997 Schulze et al.
5,673,841 A 10/1997 Schulze et al.
5,673,842 A 10/1997 Bittner et al.
5,674,184 A 10/1997 Hassler, Jr.
5,674,286 A 10/1997 D'Alessio et al.
5,678,748 A 10/1997 Plyley et al.
5,680,981 A 10/1997 Mililli et al.
5,680,982 A 10/1997 Schulze et al.
5,680,983 A 10/1997 Plyley et al.
5,681,341 A 10/1997 Lunsford et al.
5,683,349 A 11/1997 Makower et al.
5,683,432 A 11/1997 Goedeke et al.
5,685,474 A 11/1997 Seeber
5,686,090 A 11/1997 Schilder et al.
5,688,270 A 11/1997 Yates et al.
5,690,269 A 11/1997 Bolanos et al.
5,690,675 A 11/1997 Sawyer et al.
5,692,668 A 12/1997 Schulze et al.
5,693,020 A 12/1997 Rauh
5,693,042 A 12/1997 Boiarski et al.
5,693,051 A 12/1997 Schulze et al.
5,695,494 A 12/1997 Becker
5,695,502 A 12/1997 Pier et al.
5,695,504 A 12/1997 Gifford, III et al.
5,695,524 A 12/1997 Kelley et al.
5,697,542 A 12/1997 Knodel et al.
5,697,543 A 12/1997 Burdorff
5,697,909 A 12/1997 Eggers et al.
5,697,943 A 12/1997 Sauer et al.
5,700,265 A 12/1997 Romano
5,700,270 A 12/1997 Peyser et al.
5,700,276 A 12/1997 Benecke
5,702,387 A 12/1997 Arts et al.
5,702,408 A 12/1997 Wales et al.
5,702,409 A 12/1997 Rayburn et al.
5,704,087 A 1/1998 Strub
5,704,534 A 1/1998 Huitema et al.
5,704,792 A 1/1998 Sobhani
5,706,997 A 1/1998 Green et al.
5,706,998 A 1/1998 Plyley et al.
5,707,392 A 1/1998 Kortenbach
5,709,334 A 1/1998 Sorrentino et al.
5,709,335 A 1/1998 Heck
5,709,680 A 1/1998 Yates et al.
5,709,706 A 1/1998 Kienzle et al.
5,711,472 A 1/1998 Bryan
5,711,960 A 1/1998 Shikinami
5,712,460 A 1/1998 Carr et al.
5,713,128 A 2/1998 Schrenk et al.
5,713,505 A 2/1998 Huitema
5,713,895 A 2/1998 Lontine et al.
5,713,896 A 2/1998 Nardella
5,713,920 A 2/1998 Bezwada et al.
5,715,604 A 2/1998 Lanzoni
5,715,836 A 2/1998 Kliegis et al.
5,715,987 A 2/1998 Kelley et al.
5,715,988 A 2/1998 Palmer
5,716,352 A 2/1998 Viola et al.
5,716,366 A 2/1998 Yates

(56) **References Cited**

U.S. PATENT DOCUMENTS

5,718,359 A 2/1998 Palmer et al.
5,718,360 A 2/1998 Green et al.
5,718,548 A 2/1998 Cotellessa
5,718,714 A 2/1998 Livneh
5,720,744 A 2/1998 Eggleston et al.
D393,067 S 3/1998 Geary et al.
5,724,025 A 3/1998 Tavori
5,725,536 A 3/1998 Oberlin et al.
5,725,554 A 3/1998 Simon et al.
5,728,110 A 3/1998 Vidal et al.
5,728,113 A 3/1998 Sherts
5,728,121 A 3/1998 Bimbo et al.
5,730,758 A 3/1998 Allgeyer
5,732,712 A 3/1998 Adair
5,732,821 A 3/1998 Stone et al.
5,732,871 A 3/1998 Clark et al.
5,732,872 A 3/1998 Bolduc et al.
5,733,308 A 3/1998 Daugherty et al.
5,735,445 A 4/1998 Vidal et al.
5,735,848 A 4/1998 Yates et al.
5,735,874 A 4/1998 Measamer et al.
5,736,271 A 4/1998 Cisar et al.
5,738,474 A 4/1998 Blewett
5,738,629 A 4/1998 Moll et al.
5,738,648 A 4/1998 Lands et al.
5,741,271 A 4/1998 Nakao et al.
5,743,456 A 4/1998 Jones et al.
5,746,770 A 5/1998 Zeitels et al.
5,747,953 A 5/1998 Philipp
5,749,889 A 5/1998 Bacich et al.
5,749,893 A 5/1998 Vidal et al.
5,749,896 A 5/1998 Cook
5,749,968 A 5/1998 Melanson et al.
5,752,644 A 5/1998 Bolanos et al.
5,752,965 A 5/1998 Francis et al.
5,752,970 A 5/1998 Yoon
5,752,973 A 5/1998 Kieturakis
5,755,717 A 5/1998 Yates et al.
5,755,726 A 5/1998 Pratt et al.
5,758,814 A 6/1998 Gallagher et al.
5,762,255 A 6/1998 Chrisman et al.
5,762,256 A 6/1998 Mastri et al.
5,762,458 A 6/1998 Wang et al.
5,765,565 A 6/1998 Adair
5,766,186 A 6/1998 Faraz et al.
5,766,188 A 6/1998 Igaki
5,766,205 A 6/1998 Zvenyatsky et al.
5,769,303 A 6/1998 Knodel et al.
5,769,640 A 6/1998 Jacobus et al.
5,769,748 A 6/1998 Eyerly et al.
5,769,791 A 6/1998 Benaron et al.
5,769,892 A 6/1998 Kingwell
5,772,099 A 6/1998 Gravener
5,772,379 A 6/1998 Evensen
5,772,578 A 6/1998 Heimberger et al.
5,772,659 A 6/1998 Becker et al.
5,773,991 A 6/1998 Chen
5,776,130 A 7/1998 Buysse et al.
5,778,939 A 7/1998 Hok-Yin
5,779,130 A 7/1998 Alesi et al.
5,779,131 A 7/1998 Knodel et al.
5,779,132 A 7/1998 Knodel et al.
5,782,396 A 7/1998 Mastri et al.
5,782,397 A 7/1998 Koukline
5,782,748 A 7/1998 Palmer et al.
5,782,749 A 7/1998 Riza
5,782,859 A 7/1998 Nicholas et al.
5,784,934 A 7/1998 Izumisawa
5,785,232 A 7/1998 Vidal et al.
5,785,647 A 7/1998 Tompkins et al.
5,787,897 A 8/1998 Kieturakis
5,791,231 A 8/1998 Cohn et al.
5,792,135 A 8/1998 Madhani et al.
5,792,162 A 8/1998 Jolly et al.
5,792,165 A 8/1998 Klieman et al.
5,792,573 A 8/1998 Pitzen et al.
5,794,834 A 8/1998 Hamblin et al.
5,796,188 A 8/1998 Bays
5,797,536 A 8/1998 Smith et al.
5,797,537 A 8/1998 Oberlin et al.
5,797,538 A 8/1998 Heaton et al.
5,797,637 A 8/1998 Ervin
5,797,900 A 8/1998 Madhani et al.
5,797,906 A 8/1998 Rhum et al.
5,797,927 A 8/1998 Yoon
5,797,941 A 8/1998 Schulze et al.
5,797,959 A 8/1998 Castro et al.
5,798,752 A 8/1998 Buxton et al.
5,799,857 A 9/1998 Robertson et al.
5,800,379 A 9/1998 Edwards
5,800,423 A 9/1998 Jensen
5,804,726 A 9/1998 Geib et al.
5,804,936 A 9/1998 Brodsky et al.
5,806,676 A 9/1998 Wasgien
5,807,241 A 9/1998 Heimberger
5,807,376 A 9/1998 Viola et al.
5,807,378 A 9/1998 Jensen et al.
5,807,393 A 9/1998 Williamson, IV et al.
5,809,441 A 9/1998 McKee
5,810,240 A 9/1998 Robertson
5,810,721 A 9/1998 Mueller et al.
5,810,811 A 9/1998 Yates et al.
5,810,846 A 9/1998 Virnich et al.
5,810,855 A 9/1998 Rayburn et al.
5,812,188 A 9/1998 Adair
5,813,813 A 9/1998 Daum et al.
5,814,055 A 9/1998 Knodel et al.
5,814,057 A 9/1998 Oi et al.
5,816,471 A 10/1998 Plyley et al.
5,817,084 A 10/1998 Jensen
5,817,091 A 10/1998 Nardella et al.
5,817,093 A 10/1998 Williamson, IV et al.
5,817,109 A 10/1998 McGarry et al.
5,817,119 A 10/1998 Klieman et al.
5,820,009 A 10/1998 Melling et al.
5,823,066 A 10/1998 Huitema et al.
5,824,333 A 10/1998 Scopelianos et al.
5,826,776 A 10/1998 Schulze et al.
5,827,271 A 10/1998 Buysse et al.
5,827,298 A 10/1998 Hart et al.
5,827,323 A 10/1998 Klieman et al.
5,829,662 A 11/1998 Allen et al.
5,830,598 A 11/1998 Patterson
5,833,690 A 11/1998 Yates et al.
5,833,695 A 11/1998 Yoon
5,833,696 A 11/1998 Whitfield et al.
5,836,503 A 11/1998 Ehrenfels et al.
5,836,960 A 11/1998 Kolesa et al.
5,839,369 A 11/1998 Chatterjee et al.
5,839,639 A 11/1998 Sauer et al.
5,841,284 A 11/1998 Takahashi
5,843,021 A 12/1998 Edwards et al.
5,843,096 A 12/1998 Igaki et al.
5,843,097 A 12/1998 Mayenberger et al.
5,843,122 A 12/1998 Riza
5,843,132 A 12/1998 Ilvento
5,843,169 A 12/1998 Taheri
5,846,254 A 12/1998 Schulze et al.
5,847,566 A 12/1998 Marritt et al.
5,849,011 A 12/1998 Jones et al.
5,849,020 A 12/1998 Long et al.
5,849,023 A 12/1998 Mericle
5,851,179 A 12/1998 Ritson et al.
5,851,212 A 12/1998 Zirps et al.
5,853,366 A 12/1998 Dowlatshahi
5,855,311 A 1/1999 Hamblin et al.
5,855,583 A 1/1999 Wang et al.
5,860,581 A 1/1999 Robertson et al.
5,860,975 A 1/1999 Goble et al.
5,865,361 A 2/1999 Milliman et al.
5,865,638 A 2/1999 Trafton
5,868,361 A 2/1999 Rinderer
5,868,664 A 2/1999 Speier et al.
5,868,760 A 2/1999 McGuckin, Jr.

(56) **References Cited**

U.S. PATENT DOCUMENTS

5,868,790 A 2/1999 Vincent et al.
5,871,135 A 2/1999 Williamson, IV et al.
5,873,885 A 2/1999 Weidenbenner
5,876,401 A 3/1999 Schulze et al.
5,878,193 A 3/1999 Wang et al.
5,878,607 A 3/1999 Nunes et al.
5,878,937 A 3/1999 Green et al.
5,878,938 A 3/1999 Bittner et al.
5,881,777 A 3/1999 Bassi et al.
5,881,943 A 3/1999 Heck et al.
5,891,094 A 4/1999 Masterson et al.
5,891,160 A 4/1999 Williamson, IV et al.
5,891,558 A 4/1999 Bell et al.
5,893,506 A 4/1999 Powell
5,893,835 A 4/1999 Witt et al.
5,893,855 A 4/1999 Jacobs
5,893,863 A 4/1999 Yoon
5,893,878 A 4/1999 Pierce
5,894,979 A 4/1999 Powell
5,897,552 A 4/1999 Edwards et al.
5,897,562 A 4/1999 Bolanos et al.
5,899,824 A 5/1999 Kurtz et al.
5,899,914 A 5/1999 Zirps et al.
5,901,895 A 5/1999 Heaton et al.
5,902,312 A 5/1999 Frater et al.
5,903,117 A 5/1999 Gregory
5,904,647 A 5/1999 Ouchi
5,904,693 A 5/1999 Dicesare et al.
5,904,702 A 5/1999 Ek et al.
5,906,577 A 5/1999 Beane et al.
5,906,625 A 5/1999 Bito et al.
5,907,211 A 5/1999 Hall et al.
5,907,664 A 5/1999 Wang et al.
5,908,149 A 6/1999 Welch et al.
5,908,402 A 6/1999 Blythe
5,908,427 A 6/1999 McKean et al.
5,909,062 A 6/1999 Krietzman
5,911,353 A 6/1999 Bolanos et al.
5,915,616 A 6/1999 Viola et al.
5,916,225 A 6/1999 Kugel
5,918,791 A 7/1999 Sorrentino et al.
5,919,198 A 7/1999 Graves, Jr. et al.
5,921,956 A 7/1999 Grinberg et al.
5,922,001 A 7/1999 Yoon
5,922,003 A 7/1999 Anctil et al.
5,924,864 A 7/1999 Loge et al.
5,928,137 A 7/1999 Green
5,928,256 A 7/1999 Riza
5,931,847 A 8/1999 Bittner et al.
5,931,853 A 8/1999 McEwen et al.
5,937,951 A 8/1999 Izuchukwu et al.
5,938,667 A 8/1999 Peyser et al.
5,941,442 A 8/1999 Geiste et al.
5,941,890 A 8/1999 Voegele et al.
5,944,172 A 8/1999 Hannula
5,944,715 A 8/1999 Goble et al.
5,946,978 A 9/1999 Yamashita
5,947,984 A 9/1999 Whipple
5,947,996 A 9/1999 Logeman
5,948,030 A 9/1999 Miller et al.
5,948,429 A 9/1999 Bell et al.
5,951,301 A 9/1999 Younker
5,951,516 A 9/1999 Bunyan
5,951,552 A 9/1999 Long et al.
5,951,574 A 9/1999 Stefanchik et al.
5,951,575 A 9/1999 Bolduc et al.
5,951,581 A 9/1999 Saadat et al.
5,954,259 A 9/1999 Viola et al.
5,957,831 A 9/1999 Adair
5,964,394 A 10/1999 Robertson
5,964,774 A 10/1999 McKean et al.
5,966,126 A 10/1999 Szabo
5,971,916 A 10/1999 Koren
5,973,221 A 10/1999 Collyer et al.
D416,089 S 11/1999 Barton et al.
5,976,122 A 11/1999 Madhani et al.
5,977,746 A 11/1999 Hershberger et al.
5,980,248 A 11/1999 Kusakabe et al.
5,980,569 A 11/1999 Scirica
5,984,949 A 11/1999 Levin
5,988,479 A 11/1999 Palmer
5,990,379 A 11/1999 Gregory
5,993,466 A 11/1999 Yoon
5,997,528 A 12/1999 Bisch et al.
5,997,552 A 12/1999 Person et al.
6,001,108 A 12/1999 Wang et al.
6,003,517 A 12/1999 Sheffield et al.
6,004,319 A 12/1999 Goble et al.
6,004,335 A 12/1999 Vaitekunas et al.
6,007,521 A 12/1999 Bidwell et al.
6,010,054 A 1/2000 Johnson et al.
6,010,513 A 1/2000 Tormala et al.
6,010,520 A 1/2000 Pattison
6,012,494 A 1/2000 Balazs
6,013,076 A 1/2000 Goble et al.
6,013,991 A 1/2000 Philipp
6,015,406 A 1/2000 Goble et al.
6,015,417 A 1/2000 Reynolds, Jr.
6,017,322 A 1/2000 Snoke et al.
6,017,354 A 1/2000 Culp et al.
6,017,356 A 1/2000 Frederick et al.
6,018,227 A 1/2000 Kumar et al.
6,019,745 A 2/2000 Gray
6,019,780 A 2/2000 Lombardo et al.
6,022,352 A 2/2000 Vandewalle
6,023,275 A 2/2000 Horvitz et al.
6,023,641 A 2/2000 Thompson
6,024,708 A 2/2000 Bales et al.
6,024,741 A 2/2000 Williamson, IV et al.
6,024,748 A 2/2000 Manzo et al.
6,024,750 A 2/2000 Mastri et al.
6,024,764 A 2/2000 Schroeppel
6,027,501 A 2/2000 Goble et al.
6,030,384 A 2/2000 Nezhat
6,032,849 A 3/2000 Mastri et al.
6,033,105 A 3/2000 Barker et al.
6,033,378 A 3/2000 Lundquist et al.
6,033,399 A 3/2000 Gines
6,033,427 A 3/2000 Lee
6,036,641 A 3/2000 Taylor et al.
6,036,667 A 3/2000 Manna et al.
6,037,724 A 3/2000 Buss et al.
6,037,927 A 3/2000 Rosenberg
6,039,126 A 3/2000 Hsieh
6,039,733 A 3/2000 Buysse et al.
6,039,734 A 3/2000 Goble
6,042,601 A 3/2000 Smith
6,042,607 A 3/2000 Williamson, IV et al.
6,043,626 A 3/2000 Snyder et al.
6,045,560 A 4/2000 McKean et al.
6,047,861 A 4/2000 Vidal et al.
6,049,145 A 4/2000 Austin et al.
6,050,172 A 4/2000 Corves et al.
6,050,472 A 4/2000 Shibata
6,050,989 A 4/2000 Fox et al.
6,050,990 A 4/2000 Tankovich et al.
6,050,996 A 4/2000 Schmaltz et al.
6,053,390 A 4/2000 Green et al.
6,053,899 A 4/2000 Slanda et al.
6,053,922 A 4/2000 Krause et al.
6,054,142 A 4/2000 Li et al.
6,055,062 A 4/2000 Dina et al.
RE36,720 E 5/2000 Green et al.
6,056,735 A 5/2000 Okada et al.
6,056,746 A 5/2000 Goble et al.
6,059,806 A 5/2000 Hoegerle
6,062,360 A 5/2000 Shields
6,063,020 A 5/2000 Jones et al.
6,063,025 A 5/2000 Bridges et al.
6,063,050 A 5/2000 Manna et al.
6,063,095 A 5/2000 Wang et al.
6,063,097 A 5/2000 Oi et al.
6,063,098 A 5/2000 Houser et al.
6,065,679 A 5/2000 Levie et al.

(56) **References Cited**

U.S. PATENT DOCUMENTS

6,065,919 A 5/2000 Peck
6,066,132 A 5/2000 Chen et al.
6,066,151 A 5/2000 Miyawaki et al.
6,068,627 A 5/2000 Orszulak et al.
6,071,233 A 6/2000 Ishikawa et al.
6,072,299 A 6/2000 Kurle et al.
6,074,386 A 6/2000 Goble et al.
6,074,401 A 6/2000 Gardiner et al.
6,075,441 A 6/2000 Maloney
6,077,280 A 6/2000 Fossum
6,077,286 A 6/2000 Cuschieri et al.
6,077,290 A 6/2000 Marini
6,079,606 A 6/2000 Milliman et al.
6,080,181 A 6/2000 Jensen et al.
6,082,577 A 7/2000 Coates et al.
6,083,191 A 7/2000 Rose
6,083,223 A 7/2000 Baker
6,083,234 A 7/2000 Nicholas et al.
6,083,242 A 7/2000 Cook
6,086,544 A 7/2000 Hibner et al.
6,086,600 A 7/2000 Kortenbach
6,090,106 A 7/2000 Goble et al.
6,090,123 A 7/2000 Culp et al.
6,093,186 A 7/2000 Goble
6,094,021 A 7/2000 Noro et al.
D429,252 S 8/2000 Haitani et al.
6,099,537 A 8/2000 Sugai et al.
6,099,551 A 8/2000 Gabbay
6,102,271 A 8/2000 Longo et al.
6,102,926 A 8/2000 Tartaglia et al.
6,104,162 A 8/2000 Sainsbury et al.
6,104,304 A 8/2000 Clark et al.
6,106,511 A 8/2000 Jensen
6,109,500 A 8/2000 Alli et al.
6,110,187 A 8/2000 Donlon
6,113,618 A 9/2000 Nic
6,117,148 A 9/2000 Ravo et al.
6,117,158 A 9/2000 Measamer et al.
6,119,913 A 9/2000 Adams et al.
6,120,433 A 9/2000 Mizuno et al.
6,120,462 A 9/2000 Hibner et al.
6,123,241 A 9/2000 Walter et al.
6,123,701 A 9/2000 Nezhat
H001904 H 10/2000 Yates et al.
RE36,923 E 10/2000 Hiroi et al.
6,126,058 A 10/2000 Adams et al.
6,126,359 A 10/2000 Dittrich et al.
6,126,670 A 10/2000 Walker et al.
6,131,789 A 10/2000 Schulze et al.
6,131,790 A 10/2000 Piraka
6,132,368 A 10/2000 Cooper
6,134,962 A 10/2000 Sugitani
6,139,546 A 10/2000 Koenig et al.
6,142,149 A 11/2000 Steen
6,142,933 A 11/2000 Longo et al.
6,147,135 A 11/2000 Yuan et al.
6,149,660 A 11/2000 Laufer et al.
6,151,323 A 11/2000 O'Connell et al.
6,152,935 A 11/2000 Kammerer et al.
6,155,473 A 12/2000 Tompkins et al.
6,156,056 A 12/2000 Kearns et al.
6,157,169 A 12/2000 Lee
6,159,146 A 12/2000 El Gazayerli
6,159,200 A 12/2000 Verdura et al.
6,159,224 A 12/2000 Yoon
6,162,208 A 12/2000 Hipps
6,162,220 A 12/2000 Nezhat
6,162,537 A 12/2000 Martin et al.
6,165,175 A 12/2000 Wampler et al.
6,165,184 A 12/2000 Verdura et al.
6,165,188 A 12/2000 Saadat et al.
6,167,185 A 12/2000 Smiley et al.
6,168,605 B1 1/2001 Measamer et al.
6,171,305 B1 1/2001 Sherman
6,171,316 B1 1/2001 Kovac et al.
6,171,330 B1 1/2001 Benchetrit
6,173,074 B1 1/2001 Russo
6,174,308 B1 1/2001 Goble et al.
6,174,309 B1 1/2001 Wrublewski et al.
6,174,318 B1 1/2001 Bates et al.
6,175,290 B1 1/2001 Forsythe et al.
6,179,195 B1 1/2001 Adams et al.
6,179,776 B1 1/2001 Adams et al.
6,181,105 B1 1/2001 Cutolo et al.
6,182,673 B1 2/2001 Kindermann et al.
6,185,356 B1 2/2001 Parker et al.
6,186,142 B1 2/2001 Schmidt et al.
6,186,957 B1 2/2001 Milam
6,187,003 B1 2/2001 Buysse et al.
6,190,386 B1 2/2001 Rydell
6,193,129 B1 2/2001 Bittner et al.
6,197,042 B1 3/2001 Ginn et al.
6,200,311 B1 3/2001 Danek et al.
6,200,330 B1 3/2001 Benderev et al.
6,202,914 B1 3/2001 Geiste et al.
6,206,894 B1 3/2001 Thompson et al.
6,206,897 B1 3/2001 Jamiolkowski et al.
6,206,903 B1 3/2001 Ramans
6,206,904 B1 3/2001 Ouchi
6,209,414 B1 4/2001 Uneme
6,210,403 B1 4/2001 Klicek
6,211,626 B1 4/2001 Lys et al.
6,213,999 B1 4/2001 Platt, Jr. et al.
6,214,028 B1 4/2001 Yoon et al.
6,220,368 B1 4/2001 Ark et al.
6,221,007 B1 4/2001 Green
6,221,023 B1 4/2001 Matsuba et al.
6,223,100 B1 4/2001 Green
6,223,835 B1 5/2001 Habedank et al.
6,224,617 B1 5/2001 Saadat et al.
6,228,080 B1 5/2001 Gines
6,228,081 B1 5/2001 Goble
6,228,083 B1 5/2001 Lands et al.
6,228,084 B1 5/2001 Kirwan, Jr.
6,228,089 B1 5/2001 Wahrburg
6,228,098 B1 5/2001 Kayan et al.
6,231,565 B1 5/2001 Tovey et al.
6,234,178 B1 5/2001 Goble et al.
6,235,036 B1 5/2001 Gardner et al.
6,237,604 B1 5/2001 Burnside et al.
6,238,384 B1 5/2001 Peer
6,241,139 B1 6/2001 Milliman et al.
6,241,140 B1 6/2001 Adams et al.
6,241,723 B1 6/2001 Heim et al.
6,245,084 B1 6/2001 Mark et al.
6,248,116 B1 6/2001 Chevillon et al.
6,248,117 B1 6/2001 Blatter
6,249,076 B1 6/2001 Madden et al.
6,249,105 B1 6/2001 Andrews et al.
6,250,532 B1 6/2001 Green et al.
6,251,485 B1 6/2001 Harris et al.
D445,745 S 7/2001 Norman
6,254,534 B1 7/2001 Butler et al.
6,254,619 B1 7/2001 Garabet et al.
6,254,642 B1 7/2001 Taylor
6,258,107 B1 7/2001 Balazs et al.
6,261,246 B1 7/2001 Pantages et al.
6,261,286 B1 7/2001 Goble et al.
6,261,679 B1 7/2001 Chen et al.
6,264,086 B1 7/2001 McGuckin, Jr.
6,264,087 B1 7/2001 Whitman
6,264,617 B1 7/2001 Bales et al.
6,269,997 B1 8/2001 Balazs et al.
6,270,508 B1 8/2001 Klieman et al.
6,270,916 B1 8/2001 Sink et al.
6,273,252 B1 8/2001 Mitchell
6,273,876 B1 8/2001 Klima et al.
6,273,897 B1 8/2001 Dalessandro et al.
6,277,114 B1 8/2001 Bullivant et al.
6,280,407 B1 8/2001 Manna et al.
6,283,981 B1 9/2001 Beaupre
6,293,927 B1 9/2001 McGuckin, Jr.
6,293,942 B1 9/2001 Goble et al.
6,296,640 B1 10/2001 Wampler et al.

(56) **References Cited**

U.S. PATENT DOCUMENTS

6,302,311 B1 10/2001 Adams et al.
6,302,743 B1 10/2001 Chiu et al.
6,305,891 B1 10/2001 Burlingame
6,306,134 B1 10/2001 Goble et al.
6,306,149 B1 10/2001 Meade
6,306,424 B1 10/2001 Vyakarnam et al.
6,309,397 B1 10/2001 Julian et al.
6,309,400 B2 10/2001 Beaupre
6,309,403 B1 10/2001 Minor et al.
6,312,435 B1 11/2001 Wallace et al.
6,315,184 B1 11/2001 Whitman
6,317,616 B1 11/2001 Glossop
6,319,510 B1 11/2001 Yates
6,320,123 B1 11/2001 Reimers
6,322,494 B1 11/2001 Bullivant et al.
6,324,339 B1 11/2001 Hudson et al.
6,325,799 B1 12/2001 Goble
6,325,805 B1 12/2001 Ogilvie et al.
6,325,810 B1 12/2001 Hamilton et al.
6,328,498 B1 12/2001 Mersch
6,330,965 B1 12/2001 Milliman et al.
6,331,181 B1 12/2001 Tierney et al.
6,331,761 B1 12/2001 Kumar et al.
6,333,029 B1 12/2001 Vyakarnam et al.
6,334,860 B1 1/2002 Dorn
6,334,861 B1 1/2002 Chandler et al.
6,336,926 B1 1/2002 Goble
6,338,737 B1 1/2002 Toledano
6,338,738 B1 1/2002 Bellotti et al.
6,343,731 B1 2/2002 Adams et al.
6,346,077 B1 2/2002 Taylor et al.
6,348,061 B1 2/2002 Whitman
6,349,868 B1 2/2002 Mattingly et al.
D454,951 S 3/2002 Bon
6,352,503 B1 3/2002 Matsui et al.
6,352,532 B1 3/2002 Kramer et al.
6,355,699 B1 3/2002 Vyakarnam et al.
6,356,072 B1 3/2002 Chass
6,358,224 B1 3/2002 Tims et al.
6,358,263 B2 3/2002 Mark et al.
6,358,459 B1 3/2002 Ziegler et al.
6,361,542 B1 3/2002 Dimitriu et al.
6,364,828 B1 4/2002 Yeung et al.
6,364,877 B1 4/2002 Goble et al.
6,364,888 B1 4/2002 Niemeyer et al.
6,366,441 B1 4/2002 Ozawa et al.
6,370,981 B2 4/2002 Watarai
6,371,114 B1 4/2002 Schmidt et al.
6,373,152 B1 4/2002 Wang et al.
6,377,011 B1 4/2002 Ben-Ur
6,383,201 B1 5/2002 Dong
6,387,092 B1 5/2002 Burnside et al.
6,387,113 B1 5/2002 Hawkins et al.
6,387,114 B2 5/2002 Adams
6,391,038 B2 5/2002 Vargas et al.
6,392,854 B1 5/2002 O'Gorman
6,394,998 B1 5/2002 Wallace et al.
6,398,779 B1 6/2002 Buysse et al.
6,398,781 B1 6/2002 Goble et al.
6,398,797 B2 6/2002 Bombard et al.
6,402,766 B2 6/2002 Bowman et al.
6,402,780 B2 6/2002 Williamson, IV et al.
6,406,440 B1 6/2002 Stefanchik
6,406,472 B1 6/2002 Jensen
6,409,724 B1 6/2002 Penny et al.
H002037 H 7/2002 Yates et al.
6,412,639 B1 7/2002 Hickey
6,413,274 B1 7/2002 Pedros
6,415,542 B1 7/2002 Bates et al.
6,416,486 B1 7/2002 Wampler
6,416,509 B1 7/2002 Goble et al.
6,419,695 B1 7/2002 Gabbay
6,423,079 B1 7/2002 Blake, III
6,424,885 B1 7/2002 Niemeyer et al.
RE37,814 E 8/2002 Allgeyer
6,428,070 B1 8/2002 Takanashi et al.
6,428,487 B1 8/2002 Burdorff et al.
6,429,611 B1 8/2002 Li
6,430,298 B1 8/2002 Kettl et al.
6,432,065 B1 8/2002 Burdorff et al.
6,436,097 B1 8/2002 Nardella
6,436,107 B1 8/2002 Wang et al.
6,436,110 B2 8/2002 Bowman et al.
6,436,115 B1 8/2002 Beaupre
6,436,122 B1 8/2002 Frank et al.
6,439,439 B1 8/2002 Rickard et al.
6,439,446 B1 8/2002 Perry et al.
6,440,146 B2 8/2002 Nicholas et al.
6,441,577 B2 8/2002 Blumenkranz et al.
D462,758 S 9/2002 Epstein et al.
6,443,973 B1 9/2002 Whitman
6,445,530 B1 9/2002 Baker
6,447,518 B1 9/2002 Krause et al.
6,447,523 B1 9/2002 Middleman et al.
6,447,799 B1 9/2002 Ullman
6,447,864 B2 9/2002 Johnson et al.
6,450,391 B1 9/2002 Kayan et al.
6,450,989 B2 9/2002 Dubrul et al.
6,454,656 B2 9/2002 Brissette et al.
6,454,781 B1 9/2002 Witt et al.
6,457,338 B1 10/2002 Frenken
6,457,625 B1 10/2002 Tormala et al.
6,458,077 B1 10/2002 Boebel et al.
6,458,142 B1 10/2002 Faller et al.
6,458,147 B1 10/2002 Cruise et al.
6,460,627 B1 10/2002 Below et al.
6,463,824 B1 10/2002 Prell et al.
6,468,275 B1 10/2002 Wampler et al.
6,468,286 B2 10/2002 Mastri et al.
6,471,106 B1 10/2002 Reining
6,471,659 B2 10/2002 Eggers et al.
6,478,210 B2 11/2002 Adams et al.
6,482,063 B1 11/2002 Frigard
6,482,200 B2 11/2002 Shippert
6,482,217 B1 11/2002 Pintor et al.
6,485,490 B2 11/2002 Wampler et al.
6,485,503 B2 11/2002 Jacobs et al.
6,485,667 B1 11/2002 Tan
6,486,286 B1 11/2002 McGall et al.
6,488,196 B1 12/2002 Fenton, Jr.
6,488,197 B1 12/2002 Whitman
6,488,659 B1 12/2002 Rosenman
6,491,201 B1 12/2002 Whitman
6,491,690 B1 12/2002 Goble et al.
6,491,701 B2 12/2002 Tierney et al.
6,491,702 B2 12/2002 Heilbrun et al.
6,492,785 B1 12/2002 Kasten et al.
6,494,882 B1 12/2002 Lebouitz et al.
6,494,885 B1 12/2002 Dhindsa
6,494,888 B1 12/2002 Laufer et al.
6,494,896 B1 12/2002 D'Alessio et al.
6,498,480 B1 12/2002 Manara
6,500,176 B1 12/2002 Truckai et al.
6,500,189 B1 12/2002 Lang et al.
6,500,194 B2 12/2002 Benderev et al.
D468,749 S 1/2003 Friedman
6,503,139 B2 1/2003 Coral
6,503,257 B2 1/2003 Grant et al.
6,503,259 B2 1/2003 Huxel et al.
6,505,768 B2 1/2003 Whitman
6,506,197 B1 1/2003 Rollero et al.
6,506,399 B2 1/2003 Donovan
6,510,854 B2 1/2003 Goble
6,511,468 B1 1/2003 Cragg et al.
6,512,360 B1 1/2003 Goto et al.
6,514,252 B2 2/2003 Nezhat et al.
6,516,073 B1 2/2003 Schulz et al.
6,517,528 B1 2/2003 Pantages et al.
6,517,535 B2 2/2003 Edwards
6,517,565 B1 2/2003 Whitman et al.
6,517,566 B1 2/2003 Hovland et al.
6,520,971 B1 2/2003 Perry et al.
6,520,972 B2 2/2003 Peters
6,522,101 B2 2/2003 Malackowski

(56) **References Cited**

U.S. PATENT DOCUMENTS

6,524,180 B1 2/2003 Simms et al.
6,525,499 B2 2/2003 Naganuma
D471,206 S 3/2003 Buzzard et al.
6,527,782 B2 3/2003 Hogg et al.
6,527,785 B2 3/2003 Sancoff et al.
6,530,942 B2 3/2003 Fogarty et al.
6,532,958 B1 3/2003 Buan et al.
6,533,157 B1 3/2003 Whitman
6,533,723 B1 3/2003 Lockery et al.
6,533,784 B2 3/2003 Truckai et al.
6,535,764 B2 3/2003 Imran et al.
6,539,297 B2 3/2003 Weiberle et al.
D473,239 S 4/2003 Cockerill
6,539,816 B2 4/2003 Kogiso et al.
6,540,737 B2 4/2003 Bacher et al.
6,543,456 B1 4/2003 Freeman
6,545,384 B1 4/2003 Pelrine et al.
6,547,786 B1 4/2003 Goble
6,550,546 B2 4/2003 Thurler et al.
6,551,333 B2 4/2003 Kuhns et al.
6,554,844 B2 4/2003 Lee et al.
6,554,861 B2 4/2003 Knox et al.
6,555,770 B2 4/2003 Kawase
6,558,378 B2 5/2003 Sherman et al.
6,558,379 B1 5/2003 Batchelor et al.
6,558,429 B2 5/2003 Taylor
6,561,187 B2 5/2003 Schmidt et al.
6,565,560 B1 5/2003 Goble et al.
6,566,619 B2 5/2003 Gillman et al.
6,569,085 B2 5/2003 Kortenbach et al.
6,569,171 B2 5/2003 DeGuillebon et al.
6,569,173 B1 5/2003 Blatter et al.
6,572,629 B2 6/2003 Kalloo et al.
6,575,969 B1 6/2003 Rittman, III et al.
6,578,751 B2 6/2003 Hartwick
6,582,364 B2 6/2003 Butler et al.
6,582,427 B1 6/2003 Goble et al.
6,582,441 B1 6/2003 He et al.
6,583,533 B2 6/2003 Pelrine et al.
6,585,144 B2 7/2003 Adams et al.
6,585,664 B2 7/2003 Burdorff et al.
6,586,898 B2 7/2003 King et al.
6,587,750 B2 7/2003 Gerbi et al.
6,588,277 B2 7/2003 Giordano et al.
6,588,643 B2 7/2003 Bolduc et al.
6,588,931 B2 7/2003 Betzner et al.
6,589,118 B1 7/2003 Soma et al.
6,589,164 B1 7/2003 Flaherty
6,592,538 B1 7/2003 Hotchkiss et al.
6,592,572 B1 7/2003 Suzuta
6,592,597 B2 7/2003 Grant et al.
6,594,552 B1 7/2003 Nowlin et al.
6,595,914 B2 7/2003 Kato
6,596,296 B1 7/2003 Nelson et al.
6,596,304 B1 7/2003 Bayon et al.
6,596,432 B2 7/2003 Kawakami et al.
6,599,295 B1 7/2003 Tornier et al.
6,599,323 B2 7/2003 Melican et al.
D478,665 S 8/2003 Isaacs et al.
D478,986 S 8/2003 Johnston et al.
6,601,749 B2 8/2003 Sullivan et al.
6,602,252 B2 8/2003 Mollenauer
6,602,262 B2 8/2003 Griego et al.
6,603,050 B2 8/2003 Heaton
6,605,078 B2 8 2003 Adams
6,605,669 B2 8/2003 Awokola et al.
6,605,911 B1 8/2003 Klesing
6,607,475 B2 8/2003 Doyle et al.
6,611,793 B1 8/2003 Burnside et al.
6,613,069 B2 9/2003 Boyd et al.
6,616,686 B2 9/2003 Coleman et al.
6,619,529 B2 9/2003 Green et al.
6,620,111 B2 9/2003 Stephens et al.
6,620,161 B2 9/2003 Schulze et al.
6,620,166 B1 9/2003 Wenstrom, Jr. et al.
6,625,517 B1 9/2003 Bogdanov et al.
6,626,834 B2 9/2003 Dunne et al.
6,626,901 B1 9/2003 Treat et al.
6,626,938 B1 9/2003 Butaric et al.
H002086 H 10/2003 Amsler
6,629,630 B2 10/2003 Adams
6,629,974 B2 10/2003 Penny et al.
6,629,988 B2 10/2003 Weadock
6,635,838 B1 10/2003 Kornelson
6,636,412 B2 10/2003 Smith
6,638,108 B2 10/2003 Tachi
6,638,285 B2 10/2003 Gabbay
6,638,297 B1 10/2003 Huitema
RE38,335 E 11/2003 Aust et al.
6,641,528 B2 11/2003 Torii
6,644,532 B2 11/2003 Green et al.
6,645,201 B1 11/2003 Utley et al.
6,646,307 B1 11/2003 Yu et al.
6,648,816 B2 11/2003 Irion et al.
6,648,901 B2 11/2003 Fleischman et al.
6,652,595 B1 11/2003 Nicolo
D484,243 S 12/2003 Ryan et al.
D484,595 S 12/2003 Ryan et al.
D484,596 S 12/2003 Ryan et al.
6,656,177 B2 12/2003 Truckai et al.
6,656,193 B2 12/2003 Grant et al.
6,659,940 B2 12/2003 Adler
6,660,008 B1 12/2003 Foerster et al.
6,663,623 B1 12/2003 Oyama et al.
6,663,641 B1 12/2003 Kovac et al.
6,666,854 B1 12/2003 Lange
6,666,860 B1 12/2003 Takahashi
6,666,875 B1 12/2003 Sakurai et al.
6,667,825 B2 12/2003 Lu et al.
6,669,073 B2 12/2003 Milliman et al.
6,670,806 B2 12/2003 Wendt et al.
6,671,185 B2 12/2003 Duval
D484,977 S 1/2004 Ryan et al.
6,676,660 B2 1/2004 Wampler et al.
6,677,687 B2 1/2004 Ho et al.
6,679,269 B2 1/2004 Swanson
6,679,410 B2 1/2004 Wursch et al.
6,681,978 B2 1/2004 Geiste et al.
6,681,979 B2 1/2004 Whitman
6,682,527 B2 1/2004 Strul
6,682,528 B2 1/2004 Frazier et al.
6,682,544 B2 1/2004 Mastri et al.
6,685,698 B2 2/2004 Morley et al.
6,685,727 B2 2/2004 Fisher et al.
6,689,153 B1 2/2004 Skiba
6,692,507 B2 2/2004 Pugsley et al.
6,692,692 B2 2/2004 Stetzel
6,695,198 B2 2/2004 Adams et al.
6,695,199 B2 2/2004 Whitman
6,695,774 B2 2/2004 Hale et al.
6,695,849 B2 2/2004 Michelson
6,696,814 B2 2/2004 Henderson et al.
6,697,048 B2 2/2004 Rosenberg et al.
6,698,643 B2 3/2004 Whitman
6,699,177 B1 3/2004 Wang et al.
6,699,214 B2 3/2004 Gellman
6,699,235 B2 3/2004 Wallace et al.
6,704,210 B1 3/2004 Myers
6,705,503 B1 3/2004 Pedicini et al.
6,709,445 B2 3/2004 Boebel et al.
6,712,773 B1 3/2004 Viola
6,716,215 B1 4/2004 David et al.
6,716,223 B2 4/2004 Leopold et al.
6,716,232 B1 4/2004 Vidal et al.
6,716,233 B1 4/2004 Whitman
6,720,734 B2 4/2004 Norris
6,722,550 B1 4/2004 Ricordi et al.
6,722,552 B2 4/2004 Fenton, Jr.
6,723,087 B2 4/2004 O'Neill et al.
6,723,091 B2 4/2004 Goble et al.
6,723,106 B1 4/2004 Charles et al.
6,723,109 B2 4/2004 Solingen
6,726,651 B1 4/2004 Robinson et al.
6,726,697 B2 4/2004 Nicholas et al.

(56) **References Cited**

U.S. PATENT DOCUMENTS

6,726,705 B2 4/2004 Peterson et al.
6,726,706 B2 4/2004 Dominguez
6,729,119 B2 5/2004 Schnipke et al.
6,731,976 B2 5/2004 Penn et al.
6,736,810 B2 5/2004 Hoey et al.
6,736,825 B2 5/2004 Blatter et al.
6,736,854 B2 5/2004 Vadurro et al.
6,740,030 B2 5/2004 Martone et al.
6,743,230 B2 6/2004 Lutze et al.
6,744,385 B2 6/2004 Kazuya et al.
6,747,121 B2 6/2004 Gogolewski
6,747,300 B2 6/2004 Nadd et al.
6,749,560 B1 6/2004 Konstorum et al.
6,749,600 B1 6/2004 Levy
6,752,768 B2 6/2004 Burdorff et al.
6,752,816 B2 6/2004 Culp et al.
6,754,959 B1 6/2004 Guiette, III et al.
6,755,195 B1 6/2004 Lemke et al.
6,755,338 B2 6/2004 Hahnen et al.
6,755,825 B2 6/2004 Shoenman et al.
6,755,843 B2 6/2004 Chung et al.
6,756,705 B2 6/2004 Pulford, Jr.
6,758,846 B2 7/2004 Goble et al.
6,761,685 B2 7/2004 Adams et al.
6,762,339 B1 7/2004 Klun et al.
6,763,307 B2 7/2004 Berg et al.
6,764,445 B2 7/2004 Ramans et al.
6,766,957 B2 7/2004 Matsuura et al.
6,767,352 B2 7/2004 Field et al.
6,767,356 B2 7/2004 Kanner et al.
6,769,590 B2 8/2004 Vresh et al.
6,769,594 B2 8/2004 Orban, III
6,770,027 B2 8/2004 Banik et al.
6,770,070 B1 8/2004 Balbierz
6,770,072 B1 8/2004 Truckai et al.
6,770,078 B2 8/2004 Bonutti
6,773,409 B2 8/2004 Truckai et al.
6,773,437 B2 8/2004 Ogilvie et al.
6,773,438 B1 8/2004 Knodel et al.
6,773,458 B1 8/2004 Brauker et al.
6,775,575 B2 8/2004 Bommannan et al.
6,777,838 B2 8/2004 Miekka et al.
6,778,846 B1 8/2004 Martinez et al.
6,780,151 B2 8/2004 Grabover et al.
6,780,180 B1 8/2004 Goble et al.
6,783,524 B2 8/2004 Anderson et al.
6,784,775 B2 8/2004 Mandell et al.
6,786,382 B1 9/2004 Hoffman
6,786,864 B2 9/2004 Matsuura et al.
6,786,896 B1 9/2004 Madhani et al.
6,788,018 B1 9/2004 Blumenkranz
6,790,173 B2 9/2004 Saadat et al.
6,793,652 B1 9/2004 Whitman et al.
6,793,661 B2 9/2004 Hamilton et al.
6,793,663 B2 9/2004 Kneifel et al.
6,793,669 B2 9/2004 Nakamura et al.
6,796,921 B1 9/2004 Buck et al.
6,799,669 B2 10/2004 Fukumura et al.
6,801,009 B2 10/2004 Makaran et al.
6,802,822 B1 10/2004 Dodge
6,802,843 B2 10/2004 Truckai et al.
6,802,844 B2 10/2004 Ferree
6,805,273 B2 10/2004 Bilotti et al.
6,806,808 B1 10/2004 Watters et al.
6,806,867 B1 10 2004 Arruda et al.
6,808,525 B2 10/2004 Latterell et al.
6,810,359 B2 10/2004 Sakaguchi
6,814,154 B2 11/2004 Chou
6,814,741 B2 11/2004 Bowman et al.
6,817,508 B1 11/2004 Racenet et al.
6,817,509 B2 11/2004 Geiste et al.
6,817,974 B2 11/2004 Cooper et al.
6,818,018 B1 11/2004 Sawhney
6,820,791 B2 11/2004 Adams
6,821,273 B2 11/2004 Mollenauer
6,821,282 B2 11/2004 Perry et al.
6,821,284 B2 11/2004 Sturtz et al.
6,827,246 B2 12/2004 Sullivan et al.
6,827,712 B2 12/2004 Tovey et al.
6,827,725 B2 12/2004 Batchelor et al.
6,828,902 B2 12/2004 Casden
6,830,174 B2 12/2004 Hillstead et al.
6,831,629 B2 12/2004 Nishino et al.
6,832,998 B2 12/2004 Goble
6,834,001 B2 12/2004 Myono
6,835,173 B2 12/2004 Couvillon, Jr.
6,835,199 B2 12/2004 McGuckin, Jr. et al.
6,835,336 B2 12/2004 Watt
6,836,611 B2 12/2004 Popovic et al.
6,837,846 B2 1/2005 Jaffe et al.
6,837,883 B2 1/2005 Moll et al.
6,838,493 B2 1/2005 Williams et al.
6,840,423 B2 1/2005 Adams et al.
6,840,938 B1 1/2005 Morley et al.
6,841,967 B2 1/2005 Kim et al.
6,843,403 B2 1/2005 Whitman
6,843,789 B2 1/2005 Goble
6,843,793 B2 1/2005 Brock et al.
6,846,307 B2 1/2005 Whitman et al.
6,846,308 B2 1/2005 Whitman et al.
6,846,309 B2 1/2005 Whitman et al.
6,847,190 B2 1/2005 Schaefer et al.
6,849,071 B2 2/2005 Whitman et al.
6,850,817 B1 2/2005 Green
6,852,122 B2 2/2005 Rush
6,852,330 B2 2/2005 Bowman et al.
6,853,879 B2 2/2005 Sunaoshi
6,858,005 B2 2/2005 Ohline et al.
6,859,882 B2 2/2005 Fung
RE38,708 E 3/2005 Bolanos et al.
D502,994 S 3/2005 Blake, III
6,860,169 B2 3/2005 Shinozaki
6,861,142 B1 3/2005 Wilkie et al.
6,861,954 B2 3/2005 Levin
6,863,668 B2 3/2005 Gillespie et al.
6,863,694 B1 3/2005 Boyce et al.
6,863,924 B2 3/2005 Ranganathan et al.
6,866,178 B2 3/2005 Adams et al.
6,866,668 B2 3/2005 Giannetti et al.
6,866,671 B2 3/2005 Tierney et al.
6,867,248 B1 3/2005 Martin et al.
6,869,430 B2 3/2005 Balbierz et al.
6,869,435 B2 3/2005 Blake, III
6,872,214 B2 3/2005 Sonnenschein et al.
6,874,669 B2 4/2005 Adams et al.
6,876,850 B2 4/2005 Maeshima et al.
6,877,647 B2 4/2005 Green et al.
6,878,106 B1 4/2005 Herrmann
6,882,127 B2 4/2005 Konigbauer
6,883,199 B1 4/2005 Lundell et al.
6,884,392 B2 4/2005 Malkin et al.
6,884,428 B2 4/2005 Binette et al.
6,886,730 B2 5/2005 Fujisawa et al.
6,887,244 B1 5/2005 Walker et al.
6,887,710 B2 5/2005 Call et al.
6,889,116 B2 5/2005 Jinno
6,893,435 B2 5/2005 Goble
6,894,140 B2 5/2005 Roby
6,895,176 B2 5/2005 Archer et al.
6,899,538 B2 5/2005 Matoba
6,899,593 B1 5/2005 Moeller et al.
6,899,705 B2 5/2005 Niemeyer
6,899,915 B2 5/2005 Yelick et al.
6,905,057 B2 6/2005 Swayze et al.
6,905,497 B2 6/2005 Truckai et al.
6,905,498 B2 6/2005 Hooven
6,908,472 B2 6/2005 Wiener et al.
6,911,033 B2 6/2005 de Guillebon et al.
6,911,916 B1 6/2005 Wang et al.
6,913,579 B2 7/2005 Truckai et al.
6,913,608 B2 7/2005 Liddicoat et al.
6,913,613 B2 7/2005 Schwarz et al.
6,921,397 B2 7/2005 Corcoran et al.
6,921,412 B1 7/2005 Black et al.

(56) **References Cited**

U.S. PATENT DOCUMENTS

6,923,093 B2 8/2005 Ullah
6,923,803 B2 8/2005 Goble
6,923,819 B2 8/2005 Meade et al.
6,925,849 B2 8/2005 Jairam
6,926,716 B2 8/2005 Baker et al.
6,927,315 B1 8/2005 Heinecke et al.
6,928,902 B1 8/2005 Eyssallenne
6,929,641 B2 8/2005 Goble et al.
6,929,644 B2 8/2005 Truckai et al.
6,931,830 B2 8/2005 Liao
6,932,218 B2 8/2005 Kosann et al.
6,932,810 B2 8/2005 Ryan
6,936,042 B2 8/2005 Wallace et al.
6,936,948 B2 8/2005 Bell et al.
D509,297 S 9/2005 Wells
D509,589 S 9/2005 Wells
6,938,706 B2 9/2005 Ng
6,939,358 B2 9/2005 Palacios et al.
6,942,662 B2 9/2005 Goble et al.
6,942,674 B2 9/2005 Belef et al.
6,945,444 B2 9/2005 Gresham et al.
6,945,981 B2 9/2005 Donofrio et al.
6,949,196 B2 9/2005 Schmitz et al.
6,951,562 B2 10/2005 Zwirnmann
6,953,138 B1 10/2005 Dworak et al.
6,953,139 B2 10/2005 Milliman et al.
6,953,461 B2 10/2005 McClurken et al.
6,957,758 B2 10/2005 Aranyi
6,958,035 B2 10/2005 Friedman et al.
D511,525 S 11/2005 Hernandez et al.
6,959,851 B2 11/2005 Heinrich
6,959,852 B2 11/2005 Shelton, IV et al.
6,960,107 B1 11/2005 Schaub et al.
6,960,163 B2 11/2005 Ewers et al.
6,960,220 B2 11/2005 Marino et al.
6,962,587 B2 11/2005 Johnson et al.
6,963,792 B1 11/2005 Green
6,964,363 B2 11/2005 Wales et al.
6,966,907 B2 11/2005 Goble
6,966,909 B2 11/2005 Marshall et al.
6,968,908 B2 11/2005 Tokunaga et al.
6,969,385 B2 11/2005 Moreyra
6,969,395 B2 11/2005 Eskuri
6,971,988 B2 12/2005 Orban, III
6,972,199 B2 12/2005 Lebouitz et al.
6,974,435 B2 12/2005 Daw et al.
6,974,462 B2 12/2005 Sater
6,978,921 B2 12/2005 Shelton, IV et al.
6,978,922 B2 12/2005 Bilotti et al.
6,981,628 B2 1/2006 Wales
6,981,941 B2 1/2006 Whitman et al.
6,981,978 B2 1/2006 Gannoe
6,984,203 B2 1/2006 Tartaglia et al.
6,984,231 B2 1/2006 Goble et al.
6,986,451 B1 1/2006 Mastri et al.
6,988,649 B2 1/2006 Shelton, IV et al.
6,988,650 B2 1/2006 Schwemberger et al.
6,989,034 B2 1/2006 Hammer et al.
6,990,731 B2 1/2006 Haytayan
6,990,796 B2 1/2006 Schnipke et al.
6,991,146 B2 1/2006 Sinisi et al.
6,993,200 B2 1/2006 Tastl et al.
6,993,413 B2 1/2006 Sunaoshi
6,994,708 B2 2/2006 Manzo
6,995,729 B2 2/2006 Govari et al.
6,996,433 B2 2/2006 Burbank et al.
6,997,931 B2 2/2006 Sauer et al.
6,997,935 B2 2/2006 Anderson et al.
6,998,736 B2 2/2006 Lee et al.
6,998,816 B2 2/2006 Wieck et al.
6,999,821 B2 2/2006 Jenney et al.
7,000,818 B2 2/2006 Shelton, IV et al.
7,000,819 B2 2/2006 Swayze et al.
7,000,911 B2 2/2006 McCormick et al.
7,001,380 B2 2/2006 Goble
7,001,408 B2 2/2006 Knodel et al.
7,004,174 B2 2/2006 Eggers et al.
7,005,828 B2 2/2006 Karikomi
7,007,176 B2 2/2006 Goodfellow et al.
7,008,433 B2 3/2006 Voellmicke et al.
7,008,435 B2 3/2006 Cummins
7,009,039 B2 3/2006 Yayon et al.
7,011,213 B2 3/2006 Clark et al.
7,011,657 B2 3/2006 Truckai et al.
7,014,640 B2 3/2006 Kemppainen et al.
7,018,357 B2 3/2006 Emmons
7,018,390 B2 3/2006 Turovskiy et al.
7,021,399 B2 4/2006 Driessen
7,021,669 B1 4/2006 Lindermeir et al.
7,022,131 B1 4/2006 Derowe et al.
7,023,159 B2 4/2006 Gorti et al.
7,025,064 B2 4/2006 Wang et al.
7,025,732 B2 4/2006 Thompson et al.
7,025,743 B2 4/2006 Mann et al.
7,025,774 B2 4/2006 Freeman et al.
7,025,775 B2 4/2006 Gadberry et al.
7,028,570 B2 4/2006 Ohta et al.
7,029,435 B2 4/2006 Nakao
7,029,439 B2 4/2006 Roberts et al.
7,030,904 B2 4/2006 Adair et al.
7,032,798 B2 4/2006 Whitman et al.
7,032,799 B2 4/2006 Viola et al.
7,033,356 B2 4/2006 Latterell et al.
7,033,378 B2 4/2006 Smith et al.
7,035,716 B2 4/2006 Harris et al.
7,035,762 B2 4/2006 Menard et al.
7,036,680 B1 5/2006 Flannery
7,037,314 B2 5/2006 Armstrong
7,037,344 B2 5/2006 Kagan et al.
7,038,421 B2 5/2006 Trifilo
7,041,088 B2 5/2006 Nawrocki et al.
7,041,102 B2 5/2006 Truckai et al.
7,041,868 B2 5/2006 Greene et al.
7,043,852 B2 5/2006 Hayashida et al.
7,044,350 B2 5/2006 Kameyama et al.
7,044,352 B2 5/2006 Shelton, IV et al.
7,044,353 B2 5/2006 Mastri et al.
7,046,082 B2 5/2006 Komiya et al.
7,048,165 B2 5/2006 Haramiishi
7,048,687 B1 5/2006 Reuss et al.
7,048,716 B1 5/2006 Kucharczyk et al.
7,048,745 B2 5/2006 Tierney et al.
7,052,454 B2 5/2006 Taylor
7,052,494 B2 5/2006 Goble et al.
7,052,499 B2 5/2006 Steger et al.
7,055,730 B2 6/2006 Ehrenfels et al.
7,055,731 B2 6/2006 Shelton, IV et al.
7,056,123 B2 6/2006 Gregorio et al.
7,056,284 B2 6/2006 Martone et al.
7,056,330 B2 6/2006 Gayton
7,059,331 B2 6/2006 Adams et al.
7,059,508 B2 6/2006 Shelton, IV et al.
7,063,671 B2 6/2006 Couvillon, Jr.
7,063,712 B2 6/2006 Vargas et al.
7,064,509 B1 6/2006 Fu et al.
7,066,879 B2 6/2006 Fowler et al.
7,066,944 B2 6/2006 Laufer et al.
7,067,038 B2 6/2006 Trokhan et al.
7,070,083 B2 7/2006 Jankowski
7,070,559 B2 7/2006 Adams et al.
7,070,597 B2 7/2006 Truckai et al.
7,071,287 B2 7/2006 Rhine et al.
7,075,412 B1 7/2006 Reynolds et al.
7,075,770 B1 7/2006 Smith
7,077,856 B2 7/2006 Whitman
7,080,769 B2 7/2006 Vresh et al.
7,081,114 B2 7/2006 Rashidi
7,081,318 B2 7/2006 Lee et al.
7,083,073 B2 8/2006 Yoshie et al.
7,083,075 B2 8/2006 Swayze et al.
7,083,571 B2 8/2006 Wang et al.
7,083,615 B2 8/2006 Peterson et al.
7,083,619 B2 8/2006 Truckai et al.
7,083,620 B2 8/2006 Jahns et al.

(56) **References Cited**

U.S. PATENT DOCUMENTS

7,083,626 B2 8/2006 Hart et al.
7,086,267 B2 8/2006 Dworak et al.
7,087,049 B2 8/2006 Nowlin et al.
7,087,054 B2 8/2006 Truckai et al.
7,087,071 B2 8/2006 Nicholas et al.
7,090,637 B2 8/2006 Danitz et al.
7,090,673 B2 8/2006 Dycus et al.
7,090,683 B2 8/2006 Brock et al.
7,090,684 B2 8/2006 McGuckin, Jr. et al.
7,091,191 B2 8/2006 Laredo et al.
7,091,412 B2 8/2006 Wang et al.
7,093,492 B2 8/2006 Treiber et al.
7,094,202 B2 8/2006 Nobis et al.
7,094,247 B2 8/2006 Monassevitch et al.
7,094,916 B2 8/2006 DeLuca et al.
7,096,972 B2 8/2006 Orozco, Jr.
7,097,089 B2 8/2006 Marczyk
7,097,644 B2 8/2006 Long
7,097,650 B2 8/2006 Weller et al.
7,098,794 B2 8/2006 Lindsay et al.
7,100,949 B2 9/2006 Williams et al.
7,101,187 B1 9/2006 Deconinck et al.
7,101,363 B2 9/2006 Nishizawa et al.
7,101,371 B2 9/2006 Dycus et al.
7,101,394 B2 9/2006 Hamm et al.
7,104,741 B2 9/2006 Krohn
7,108,695 B2 9/2006 Witt et al.
7,108,701 B2 9/2006 Evens et al.
7,108,709 B2 9/2006 Cummins
7,111,768 B2 9/2006 Cummins et al.
7,111,769 B2 9/2006 Wales et al.
7,112,201 B2 9/2006 Truckai et al.
7,112,214 B2 9/2006 Peterson et al.
RE39,358 E 10/2006 Goble
D530,339 S 10/2006 Hernandez et al.
7,114,642 B2 10/2006 Whitman
7,116,100 B1 10/2006 Mock et al.
7,118,020 B2 10/2006 Lee et al.
7,118,528 B1 10/2006 Piskun
7,118,563 B2 10/2006 Weckwerth et al.
7,118,582 B1 10/2006 Wang et al.
7,119,534 B2 10/2006 Butzmann
7,121,446 B2 10/2006 Arad et al.
7,121,773 B2 10/2006 Mikiya et al.
7,122,028 B2 10/2006 Looper et al.
7,125,403 B2 10/2006 Julian et al.
7,125,409 B2 10 2006 Truckai et al.
7,126,303 B2 10/2006 Farritor et al.
7,126,879 B2 10/2006 Snyder
7,128,253 B2 10/2006 Mastri et al.
7,128,254 B2 10/2006 Shelton, IV et al.
7,128,748 B2 10/2006 Mooradian et al.
7,131,445 B2 11/2006 Amoah
7,133,601 B2 11/2006 Phillips et al.
7,134,364 B2 11/2006 Kageler et al.
7,134,587 B2 11/2006 Schwemberger et al.
7,135,027 B2 11/2006 Delmotte
7,137,980 B2 11/2006 Buysse et al.
7,137,981 B2 11/2006 Long
7,139,016 B2 11/2006 Squilla et al.
7,140,527 B2 11/2006 Ehrenfels et al.
7,140,528 B2 11/2006 Shelton, IV
7,141,055 B2 11/2006 Abrams et al.
7,143,923 B2 12/2006 Shelton, IV et al.
7,143,924 B2 12/2006 Scirica et al.
7,143,925 B2 12/2006 Shelton, IV et al.
7,143,926 B2 12/2006 Shelton, IV et al.
7,146,191 B2 12/2006 Kerner et al.
7,147,138 B2 12/2006 Shelton, IV
7,147,139 B2 12/2006 Schwemberger et al.
7,147,140 B2 12/2006 Wukusick et al.
7,147,637 B2 12/2006 Goble
7,147,648 B2 12/2006 Lin
7,147,650 B2 12/2006 Lee
7,150,748 B2 12/2006 Ebbutt et al.
7,153,300 B2 12/2006 Goble
7,153,314 B2 12/2006 Laufer et al.
7,155,316 B2 12/2006 Sutherland et al.
7,156,846 B2 1/2007 Dycus et al.
7,156,863 B2 1/2007 Sonnenschein et al.
7,159,750 B2 1/2007 Racenet et al.
7,160,296 B2 1/2007 Pearson et al.
7,160,299 B2 1/2007 Baily
7,160,311 B2 1/2007 Blatter et al.
7,161,036 B2 1/2007 Oikawa et al.
7,161,580 B2 1/2007 Bailey et al.
7,162,758 B2 1/2007 Skinner
7,163,563 B2 1/2007 Schwartz et al.
7,166,117 B2 1/2007 Hellenkamp
7,166,133 B2 1/2007 Evans et al.
7,168,604 B2 1/2007 Milliman et al.
7,169,146 B2 1/2007 Truckai et al.
7,170,910 B2 1/2007 Chen et al.
7,171,279 B2 1/2007 Buckingham et al.
7,172,104 B2 2/2007 Scirica et al.
7,172,593 B2 2/2007 Trieu et al.
7,172,615 B2 2/2007 Morriss et al.
7,174,202 B2 2/2007 Bladen et al.
7,174,636 B2 2/2007 Lowe
7,177,533 B2 2/2007 McFarlin et al.
7,179,223 B2 2/2007 Motoki et al.
7,179,267 B2 2/2007 Nolan et al.
7,182,239 B1 2/2007 Myers
7,182,763 B2 2/2007 Nardella
7,183,737 B2 2/2007 Kitagawa
7,187,960 B2 3/2007 Abreu
7,188,758 B2 3/2007 Viola et al.
7,189,207 B2 3/2007 Viola
7,190,147 B2 3/2007 Gileff et al.
7,193,199 B2 3/2007 Jang
7,195,627 B2 3/2007 Amoah et al.
7,196,911 B2 3/2007 Takano et al.
D541,418 S 4/2007 Schechter et al.
7,197,965 B1 4/2007 Anderson
7,199,537 B2 4/2007 Okamura et al.
7,199,545 B2 4/2007 Oleynikov et al.
7,202,576 B1 4/2007 Dechene et al.
7,202,653 B2 4/2007 Pai
7,204,404 B2 4/2007 Nguyen et al.
7,204,835 B2 4/2007 Latterell et al.
7,205,959 B2 4/2007 Henriksson
7,206,626 B2 4/2007 Quaid, III
7,207,233 B2 4/2007 Wadge
7,207,471 B2 4/2007 Heinrich et al.
7,207,472 B2 4/2007 Wukusick et al.
7,207,556 B2 4/2007 Saitoh et al.
7,208,005 B2 4/2007 Frecker et al.
7,210,609 B2 5/2007 Leiboff et al.
7,211,081 B2 5/2007 Goble
7,211,084 B2 5/2007 Goble et al.
7,211,092 B2 5/2007 Hughett
7,211,979 B2 5/2007 Khatib et al.
7,213,736 B2 5/2007 Wales et al.
7,214,224 B2 5/2007 Goble
7,215,517 B2 5/2007 Takamatsu
7,217,285 B2 5/2007 Vargas et al.
7,220,260 B2 5/2007 Fleming et al.
7,220,272 B2 5/2007 Weadock
7,225,959 B2 6/2007 Patton et al.
7,225,963 B2 6/2007 Scirica
7,225,964 B2 6/2007 Mastri et al.
7,226,450 B2 6/2007 Athanasiou et al.
7,226,467 B2 6/2007 Lucatero et al.
7,228,505 B2 6/2007 Shimazu et al.
7,229,408 B2 6/2007 Douglas et al.
7,234,624 B2 6/2007 Gresham et al.
7,235,072 B2 6/2007 Sartor et al.
7,235,089 B1 6/2007 McGuckin, Jr.
7,235,302 B2 6/2007 Jing et al.
7,237,708 B1 7/2007 Guy et al.
7,238,195 B2 7/2007 Viola
7,238,901 B2 7/2007 Kim et al.
7,239,657 B1 7/2007 Gunnarsson
7,241,288 B2 7/2007 Braun

(56) **References Cited**

U.S. PATENT DOCUMENTS

7,241,289 B2 7/2007 Braun
7,246,734 B2 7/2007 Shelton, IV
7,247,161 B2 7/2007 Johnston et al.
7,249,267 B2 7/2007 Chapuis
7,252,641 B2 8/2007 Thompson et al.
7,252,660 B2 8/2007 Kunz
7,255,012 B2 8/2007 Hedtke
7,255,696 B2 8/2007 Goble et al.
7,256,695 B2 8/2007 Hamel et al.
7,258,262 B2 8/2007 Mastri et al.
7,258,546 B2 8/2007 Beier et al.
7,260,431 B2 8/2007 Libbus et al.
7,265,374 B2 9/2007 Lee et al.
7,267,677 B2 9/2007 Johnson et al.
7,267,679 B2 9/2007 McGuckin, Jr. et al.
7,272,002 B2 9/2007 Drapeau
7,273,483 B2 9/2007 Wiener et al.
7,273,488 B2 9/2007 Nakamura et al.
D552,623 S 10/2007 Vong et al.
7,275,674 B2 10/2007 Racenet et al.
7,276,044 B2 10/2007 Ferry et al.
7,276,068 B2 10/2007 Johnson et al.
7,278,562 B2 10/2007 Mastri et al.
7,278,563 B1 10/2007 Green
7,278,949 B2 10/2007 Bader
7,278,994 B2 10/2007 Goble
7,282,048 B2 10/2007 Goble et al.
7,283,096 B2 10/2007 Geisheimer et al.
7,286,850 B2 10/2007 Frielink et al.
7,287,682 B1 10/2007 Ezzat et al.
7,289,139 B2 10/2007 Amling et al.
7,293,685 B2 11/2007 Ehrenfels et al.
7,295,893 B2 11/2007 Sunaoshi
7,295,907 B2 11/2007 Lu et al.
7,296,722 B2 11/2007 Ivanko
7,296,724 B2 11/2007 Green et al.
7,297,149 B2 11/2007 Vitali et al.
7,300,373 B2 11/2007 Jinno et al.
7,300,431 B2 11/2007 Dubrovsky
7,300,450 B2 11/2007 Vleugels et al.
7,303,106 B2 12/2007 Milliman et al.
7,303,107 B2 12/2007 Milliman et al.
7,303,108 B2 12/2007 Shelton, IV
7,303,502 B2 12/2007 Thompson
7,303,556 B2 12/2007 Metzger
7,306,597 B2 12/2007 Manzo
7,308,998 B2 12/2007 Mastri et al.
7,311,238 B2 12/2007 Liu
7,311,709 B2 12/2007 Truckai et al.
7,313,430 B2 12/2007 Urquhart et al.
7,314,473 B2 1/2008 Jinno et al.
7,317,955 B2 1/2008 McGreevy
7,320,704 B2 1/2008 Lashinski et al.
7,322,859 B2 1/2008 Evans
7,322,975 B2 1/2008 Goble et al.
7,322,994 B2 1/2008 Nicholas et al.
7,324,572 B2 1/2008 Chang
7,326,203 B2 2/2008 Papineau et al.
7,326,213 B2 2/2008 Benderev et al.
7,328,828 B2 2/2008 Ortiz et al.
7,328,829 B2 2/2008 Arad et al.
7,330,004 B2 2/2008 DeJonge et al.
7,331,340 B2 2/2008 Barney
7,331,343 B2 2/2008 Schmidt et al.
7,331,403 B2 2/2008 Berry et al.
7,331,406 B2 2/2008 Wottreng, Jr. et al.
7,331,969 B1 2/2008 Inganas et al.
7,334,717 B2 2/2008 Rethy et al.
7,334,718 B2 2/2008 McAlister et al.
7,335,199 B2 2/2008 Goble et al.
7,335,401 B2 2/2008 Finke et al.
7,336,045 B2 2/2008 Clermonts
7,336,048 B2 2/2008 Lohr
7,336,183 B2 2/2008 Reddy et al.
7,336,184 B2 2/2008 Smith et al.
7,337,774 B2 3/2008 Webb
7,338,505 B2 3/2008 Belson
7,338,513 B2 3/2008 Lee et al.
7,341,554 B2 3/2008 Sekine et al.
7,341,555 B2 3/2008 Ootawara et al.
7,341,591 B2 3/2008 Grinberg
7,343,920 B2 3/2008 Toby et al.
7,344,532 B2 3/2008 Goble et al.
7,344,533 B2 3/2008 Pearson et al.
7,346,344 B2 3/2008 Fontaine
7,346,406 B2 3/2008 Brotto et al.
7,348,763 B1 3/2008 Reinhart et al.
7,348,875 B2 3/2008 Hughes et al.
RE40,237 E 4/2008 Bilotti et al.
7,351,258 B2 4/2008 Ricotta et al.
7,354,398 B2 4/2008 Kanazawa
7,354,440 B2 4/2008 Truckal et al.
7,354,447 B2 4/2008 Shelton, IV et al.
7,354,502 B2 4/2008 Polat et al.
7,357,287 B2 4/2008 Shelton, IV et al.
7,357,806 B2 4/2008 Rivera et al.
7,361,168 B2 4/2008 Makower et al.
7,361,195 B2 4/2008 Schwartz et al.
7,362,062 B2 4/2008 Schneider et al.
7,364,060 B2 4/2008 Milliman
7,364,061 B2 4/2008 Swayze et al.
7,367,485 B2 5/2008 Shelton, IV et al.
7,367,973 B2 5/2008 Manzo et al.
7,368,124 B2 5/2008 Chun et al.
7,371,210 B2 5/2008 Brock et al.
7,371,403 B2 5/2008 McCarthy et al.
7,375,493 B2 5/2008 Calhoon et al.
7,377,918 B2 5/2008 Amoah
7,377,928 B2 5/2008 Zubik et al.
7,378,817 B2 5/2008 Calhoon et al.
RE40,388 E 6/2008 Gines
D570,868 S 6/2008 Hosokawa et al.
7,380,695 B2 6/2008 Doll et al.
7,380,696 B2 6/2008 Shelton, IV et al.
7,384,403 B2 6/2008 Sherman
7,384,417 B2 6/2008 Cucin
7,386,365 B2 6/2008 Nixon
7,386,730 B2 6/2008 Uchikubo
7,388,217 B2 6/2008 Buschbeck et al.
7,388,484 B2 6/2008 Hsu
7,391,173 B2 6/2008 Schena
7,394,190 B2 7/2008 Huang
7,396,356 B2 7/2008 Mollenauer
7,397,364 B2 7/2008 Govari
7,398,707 B2 7/2008 Morley et al.
7,398,907 B2 7/2008 Racenet et al.
7,398,908 B2 7/2008 Holsten et al.
7,400,107 B2 7/2008 Schneider et al.
7,400,752 B2 7/2008 Zacharias
7,401,000 B2 7/2008 Nakamura
7,401,721 B2 7/2008 Holsten et al.
7,404,449 B2 7/2008 Bermingham et al.
7,404,508 B2 7/2008 Smith et al.
7,404,509 B2 7/2008 Ortiz et al.
7,404,822 B2 7/2008 Viart et al.
D575,793 S 8/2008 Ording
7,407,074 B2 8/2008 Ortiz et al.
7,407,075 B2 8/2008 Holsten et al.
7,407,076 B2 8/2008 Racenet et al.
7,407,077 B2 8/2008 Ortiz et al.
7,407,078 B2 8/2008 Shelton, IV et al.
7,408,310 B2 8/2008 Hong et al.
7,410,085 B2 8/2008 Wolf et al.
7,410,086 B2 8/2008 Ortiz et al.
7,410,483 B2 8/2008 Danitz et al.
7,413,563 B2 8/2008 Corcoran et al.
7,416,101 B2 8/2008 Shelton, IV et al.
7,418,078 B2 8/2008 Blanz et al.
RE40,514 E 9/2008 Mastri et al.
7,419,080 B2 9/2008 Smith et al.
7,419,081 B2 9/2008 Ehrenfels et al.
7,419,321 B2 9/2008 Tereschouk
7,419,495 B2 9/2008 Menn et al.
7,422,136 B1 9/2008 Marczyk

(56) **References Cited**

U.S. PATENT DOCUMENTS

7,422,138 B2 9/2008 Bilotti et al.
7,422,139 B2 9/2008 Shelton, IV et al.
7,424,965 B2 9/2008 Racenet et al.
7,427,607 B2 9/2008 Suzuki
D578,644 S 10/2008 Shumer et al.
7,430,772 B2 10/2008 Van Es
7,430,849 B1 10/2008 Coutts et al.
7,431,188 B1 10/2008 Marczyk
7,431,189 B2 10/2008 Shelton, IV et al.
7,431,230 B2 10/2008 McPherson et al.
7,431,694 B2 10/2008 Stefanchik et al.
7,431,730 B2 10/2008 Viola
7,434,715 B2 10/2008 Shelton, IV et al.
7,434,717 B2 10/2008 Shelton, IV et al.
7,435,249 B2 10/2008 Buysse et al.
7,438,209 B1 10/2008 Hess et al.
7,438,718 B2 10/2008 Milliman et al.
7,439,354 B2 10 2008 Lenges et al.
7,441,684 B2 10/2008 Shelton, IV et al.
7,441,685 B1 10/2008 Boudreaux
7,442,201 B2 10/2008 Pugsley et al.
7,443,547 B2 10/2008 Moreno et al.
D580,942 S 11/2008 Oshiro et al.
7,446,131 B1 11/2008 Liu et al.
7,448,525 B2 11/2008 Shelton, IV et al.
7,450,010 B1 11/2008 Gravelle et al.
7,450,991 B2 11/2008 Smith et al.
7,451,904 B2 11/2008 Shelton, IV
7,455,208 B2 11/2008 Wales et al.
7,455,676 B2 11/2008 Holsten et al.
7,455,682 B2 11/2008 Viola
7,455,687 B2 11/2008 Saunders et al.
D582,934 S 12/2008 Byeon
7,461,767 B2 12/2008 Viola et al.
7,462,187 B2 12/2008 Johnston et al.
7,464,845 B2 12/2008 Chou
7,464,846 B2 12/2008 Shelton, IV et al.
7,464,847 B2 12/2008 Viola et al.
7,464,848 B2 12/2008 Green et al.
7,464,849 B2 12/2008 Shelton, IV et al.
7,467,740 B2 12/2008 Shelton, IV et al.
7,467,849 B2 12/2008 Silverbrook et al.
7,472,814 B2 1/2009 Mastri et al.
7,472,815 B2 1/2009 Shelton, IV et al.
7,472,816 B2 1/2009 Holsten et al.
7,473,221 B2 1/2009 Ewers et al.
7,473,253 B2 1/2009 Dycus et al.
7,473,263 B2 1/2009 Johnston et al.
7,476,237 B2 1/2009 Taniguchi et al.
7,479,147 B2 1/2009 Honeycutt et al.
7,479,608 B2 1/2009 Smith
7,481,347 B2 1/2009 Roy
7,481,348 B2 1/2009 Marczyk
7,481,349 B2 1/2009 Holsten et al.
7,481,824 B2 1/2009 Boudreaux et al.
7,485,124 B2 2/2009 Kuhns et al.
7,485,133 B2 2/2009 Cannon et al.
7,485,142 B2 2/2009 Milo
7,487,899 B2 2/2009 Shelton, IV et al.
7,489,055 B2 2/2009 Jeong et al.
7,490,749 B2 2/2009 Schall et al.
7,491,232 B2 2/2009 Bolduc et al.
7,492,261 B2 2/2009 Cambre et al.
7,494,039 B2 2/2009 Racenet et al.
7,494,460 B2 2/2009 Haarstad et al.
7,494,499 B2 2/2009 Nagase et al.
7,494,501 B2 2/2009 Ahlberg et al.
7,497,137 B2 3/2009 Tellenbach et al.
7,500,979 B2 3/2009 Hueil et al.
7,501,198 B2 3/2009 Barley et al.
7,503,474 B2 3/2009 Hillstead et al.
7,506,790 B2 3/2009 Shelton, IV
7,506,791 B2 3/2009 Omaits et al.
7,507,202 B2 3/2009 Schoellhorn
7,510,107 B2 3/2009 Timm et al.
7,510,534 B2 3/2009 Burdorff et al.
7,510,566 B2 3/2009 Jacobs et al.
7,513,407 B1 4/2009 Chang
7,513,408 B2 4/2009 Shelton, IV et al.
7,517,356 B2 4/2009 Heinrich
7,524,320 B2 4/2009 Tierney et al.
7,527,632 B2 5/2009 Houghton et al.
7,530,984 B2 5/2009 Sonnenschein et al.
7,530,985 B2 5/2009 Takemoto et al.
7,533,790 B1 5/2009 Knodel et al.
7,533,906 B2 5/2009 Luettgen et al.
7,534,259 B2 5/2009 Lashinski et al.
7,540,867 B2 6/2009 Jinno et al.
7,540,872 B2 6/2009 Schechter et al.
7,542,807 B2 6/2009 Bertolero et al.
7,543,730 B1 6/2009 Marczyk
7,544,197 B2 6/2009 Kelsch et al.
7,546,939 B2 6/2009 Adams et al.
7,546,940 B2 6/2009 Milliman et al.
7,547,287 B2 6/2009 Boecker et al.
7,547,312 B2 6/2009 Bauman et al.
7,549,563 B2 6/2009 Mather et al.
7,549,564 B2 6/2009 Boudreaux
7,549,998 B2 6/2009 Braun
7,552,854 B2 6/2009 Wixey et al.
7,553,173 B2 6/2009 Kowalick
7,553,275 B2 6/2009 Padget et al.
7,554,343 B2 6/2009 Bromfield
7,556,185 B2 7/2009 Viola
7,556,186 B2 7/2009 Milliman
7,556,647 B2 7/2009 Drews et al.
7,559,449 B2 7/2009 Viola
7,559,450 B2 7/2009 Wales et al.
7,559,452 B2 7/2009 Wales et al.
7,559,937 B2 7/2009 de la Torre et al.
7,561,637 B2 7/2009 Jonsson et al.
7,562,910 B2 7/2009 Kertesz et al.
7,563,269 B2 7/2009 Hashiguchi
7,563,862 B2 7/2009 Sieg et al.
7,565,993 B2 7/2009 Milliman et al.
7,566,300 B2 7/2009 Devierre et al.
7,567,045 B2 7/2009 Fristedt
7,568,603 B2 8/2009 Shelton, IV et al.
7,568,604 B2 8/2009 Ehrenfels et al.
7,568,619 B2 8/2009 Todd et al.
7,572,285 B2 8/2009 Frey et al.
7,572,298 B2 8/2009 Roller et al.
7,575,144 B2 8/2009 Ortiz et al.
7,578,825 B2 8/2009 Huebner
D600,712 S 9/2009 LaManna et al.
7,583,063 B2 9/2009 Dooley
7,584,880 B2 9/2009 Racenet et al.
7,586,289 B2 9/2009 Andruk et al.
7,588,174 B2 9/2009 Holsten et al.
7,588,175 B2 9/2009 Timm et al.
7,588,176 B2 9/2009 Timm et al.
7,588,177 B2 9/2009 Racenet
7,591,783 B2 9/2009 Boulais et al.
7,591,818 B2 9/2009 Bertolero et al.
7,593,766 B2 9/2009 Faber et al.
7,595,642 B2 9/2009 Doyle
7,597,229 B2 10/2009 Boudreaux et al.
7,597,230 B2 10/2009 Racenet et al.
7,597,693 B2 10/2009 Garrison
7,597,699 B2 10/2009 Rogers
7,598,972 B2 10/2009 Tomita
7,600,663 B2 10/2009 Green
7,604,118 B2 10/2009 Iio et al.
7,604,150 B2 10/2009 Boudreaux
7,604,151 B2 10/2009 Hess et al.
7,604,668 B2 10/2009 Farnsworth et al.
7,605,826 B2 10/2009 Sauer
7,607,557 B2 10/2009 Shelton, IV et al.
7,608,091 B2 10/2009 Goldfarb et al.
D604,325 S 11/2009 Ebeling et al.
7,611,038 B2 11/2009 Racenet et al.
7,611,474 B2 11/2009 Hibner et al.
7,615,003 B2 11/2009 Stefanchik et al.
7,615,006 B2 11/2009 Abe

(56) **References Cited**

U.S. PATENT DOCUMENTS

7,615,067 B2 11/2009 Lee et al.
7,617,961 B2 11/2009 Viola
7,618,427 B2 11/2009 Ortiz et al.
D605,201 S 12/2009 Lorenz et al.
D606,992 S 12/2009 Liu et al.
D607,010 S 12/2009 Kocmick
7,624,902 B2 12/2009 Marczyk et al.
7,624,903 B2 12/2009 Green et al.
7,625,370 B2 12/2009 Hart et al.
7,625,388 B2 12/2009 Boukhny et al.
7,625,662 B2 12/2009 Vaisnys et al.
7,630,841 B2 12/2009 Comisky et al.
7,631,793 B2 12/2009 Rethy et al.
7,631,794 B2 12/2009 Rethy et al.
7,635,074 B2 12/2009 Olson et al.
7,635,922 B2 12/2009 Becker
7,637,409 B2 12/2009 Marczyk
7,637,410 B2 12/2009 Marczyk
7,638,958 B2 12/2009 Philipp et al.
7,641,091 B2 1/2010 Olson et al.
7,641,092 B2 1/2010 Kruszynski et al.
7,641,093 B2 1/2010 Doll et al.
7,641,095 B2 1/2010 Viola
7,641,671 B2 1/2010 Crainich
7,644,016 B2 1/2010 Nycz et al.
7,644,484 B2 1/2010 Vereschagin
7,644,783 B2 1/2010 Roberts et al.
7,644,848 B2 1/2010 Swayze et al.
7,645,230 B2 1/2010 Mikkaichi et al.
7,648,055 B2 1/2010 Marczyk
7,648,457 B2 1/2010 Stefanchik et al.
7,648,519 B2 1/2010 Lee et al.
7,650,185 B2 1/2010 Maile et al.
7,651,017 B2 1/2010 Ortiz et al.
7,651,498 B2 1/2010 Shifrin et al.
7,654,431 B2 2/2010 Hueil et al.
7,655,003 B2 2/2010 Lorang et al.
7,655,004 B2 2/2010 Long
7,655,288 B2 2/2010 Bauman et al.
7,655,584 B2 2/2010 Biran et al.
7,656,131 B2 2/2010 Embrey et al.
7,658,311 B2 2/2010 Boudreaux
7,658,312 B2 2/2010 Vidal et al.
7,658,705 B2 2/2010 Melvin et al.
7,659,219 B2 2/2010 Biran et al.
7,661,448 B2 2/2010 Kim et al.
7,662,161 B2 2/2010 Briganti et al.
7,665,646 B2 2/2010 Prommersberger
7,665,647 B2 2/2010 Shelton, IV et al.
7,666,195 B2 2/2010 Kelleher et al.
7,669,746 B2 3/2010 Shelton, IV
7,669,747 B2 3/2010 Weisenburgh, II et al.
7,670,334 B2 3/2010 Hueil et al.
7,670,337 B2 3/2010 Young
7,673,780 B2 3/2010 Shelton, IV et al.
7,673,781 B2 3/2010 Swayze et al.
7,673,782 B2 3/2010 Hess et al.
7,673,783 B2 3/2010 Morgan et al.
7,674,253 B2 3/2010 Fisher et al.
7,674,255 B2 3/2010 Braun
7,674,263 B2 3/2010 Ryan
7,674,270 B2 3/2010 Layer
7,678,121 B1 3/2010 Knodel
7,682,307 B2 3/2010 Danitz et al.
7,682,367 B2 3/2010 Shah et al.
7,682,686 B2 3/2010 Curro et al.
7,686,201 B2 3/2010 Csiky
7,686,804 B2 3/2010 Johnson et al.
7,686,826 B2 3/2010 Lee et al.
7,688,028 B2 3/2010 Phillips et al.
7,690,547 B2 4/2010 Racenet et al.
7,691,098 B2 4/2010 Wallace et al.
7,691,103 B2 4/2010 Fernandez et al.
7,691,106 B2 4/2010 Schenberger et al.
7,694,864 B2 4/2010 Okada et al.
7,694,865 B2 4/2010 Scirica
7,695,485 B2 4/2010 Whitman et al.
7,695,493 B2 4/2010 Saadat et al.
7,699,204 B2 4/2010 Viola
7,699,835 B2 4/2010 Lee et al.
7,699,844 B2 4/2010 Utley et al.
7,699,846 B2 4/2010 Ryan
7,699,856 B2 4/2010 Van Wyk et al.
7,699,859 B2 4/2010 Bombard et al.
7,699,860 B2 4/2010 Huitema et al.
7,699,868 B2 4/2010 Frank et al.
7,703,653 B2 4/2010 Shah et al.
7,705,559 B2 4/2010 Powell et al.
7,706,853 B2 4/2010 Hacker et al.
7,708,180 B2 5/2010 Murray et al.
7,708,181 B2 5/2010 Cole et al.
7,708,182 B2 5/2010 Viola
7,708,758 B2 5/2010 Lee et al.
7,708,768 B2 5/2010 Danek et al.
7,709,136 B2 5/2010 Touchton et al.
7,712,182 B2 5/2010 Zeiler et al.
7,713,190 B2 5/2010 Brock et al.
7,713,542 B2 5/2010 Xu et al.
7,714,239 B2 5/2010 Smith
7,714,334 B2 5/2010 Lin
7,717,312 B2 5/2010 Beetel
7,717,313 B2 5/2010 Criscuolo et al.
7,717,846 B2 5/2010 Zirps et al.
7,717,873 B2 5/2010 Swick
7,717,915 B2 5/2010 Miyazawa
7,717,926 B2 5/2010 Whitfield et al.
7,718,180 B2 5/2010 Karp
7,718,556 B2 5/2010 Matsuda et al.
7,721,930 B2 5/2010 McKenna et al.
7,721,931 B2 5/2010 Shelton, IV et al.
7,721,932 B2 5/2010 Cole et al.
7,721,933 B2 5/2010 Ehrenfels et al.
7,721,934 B2 5/2010 Shelton, IV et al.
7,721,936 B2 5/2010 Shalton, IV et al.
7,722,527 B2 5/2010 Bouchier et al.
7,722,607 B2 5/2010 Dumbauld et al.
7,722,610 B2 5/2010 Viola et al.
7,725,214 B2 5/2010 Diolaiti
7,726,171 B2 6/2010 Langlotz et al.
7,726,537 B2 6/2010 Olson et al.
7,726,538 B2 6/2010 Holsten et al.
7,726,539 B2 6/2010 Holsten et al.
7,727,954 B2 6/2010 McKay
7,728,553 B2 6/2010 Carrier et al.
7,729,742 B2 6/2010 Govari
7,731,072 B2 6/2010 Timm et al.
7,731,073 B2 6/2010 Wixey et al.
7,731,724 B2 6/2010 Huitema et al.
7,735,703 B2 6/2010 Morgan et al.
7,735,704 B2 6/2010 Bilotti
7,736,254 B2 6/2010 Schena
7,736,306 B2 6/2010 Brustad et al.
7,736,356 B2 6/2010 Cooper et al.
7,736,374 B2 6/2010 Vaughan et al.
7,738,971 B2 6/2010 Swayze et al.
7,740,159 B2 6/2010 Shelton, IV et al.
7,742,036 B2 6/2010 Grant et al.
7,743,960 B2 6/2010 Whitman et al.
7,744,624 B2 6/2010 Bettuchi
7,744,627 B2 6/2010 Orban, III et al.
7,744,628 B2 6/2010 Viola
7,747,146 B2 6/2010 Milano et al.
7,748,587 B2 7/2010 Haramiishi et al.
7,748,632 B2 7/2010 Coleman et al.
7,749,204 B2 7/2010 Dhanaraj et al.
7,749,240 B2 7/2010 Takahashi et al.
7,751,870 B2 7/2010 Whitman
7,753,245 B2 7/2010 Boudreaux et al.
7,753,246 B2 7/2010 Scirica
7,753,904 B2 7/2010 Shelton, IV et al.
7,757,924 B2 7/2010 Gerbi et al.
7,758,594 B2 7/2010 Lamson et al.
7,758,612 B2 7/2010 Shipp
7,758,613 B2 7/2010 Whitman

(56) **References Cited**

U.S. PATENT DOCUMENTS

7,762,462 B2 7/2010 Gelbman
7,762,998 B2 7/2010 Birk et al.
D622,286 S 8/2010 Umezawa
7,766,207 B2 8/2010 Mather et al.
7,766,209 B2 8/2010 Baxter, III et al.
7,766,210 B2 8/2010 Shelton, IV et al.
7,766,821 B2 8/2010 Brunnen et al.
7,766,894 B2 8/2010 Weitzner et al.
7,770,658 B2 8/2010 Ito et al.
7,770,773 B2 8/2010 Whitman et al.
7,770,774 B2 8/2010 Mastri et al.
7,770,775 B2 8/2010 Shelton, IV et al.
7,770,776 B2 8/2010 Chen et al.
7,771,396 B2 8/2010 Stefanchik et al.
7,772,720 B2 8/2010 McGee et al.
7,772,725 B2 8/2010 Siman-Tov
7,775,972 B2 8/2010 Brock et al.
7,776,037 B2 8/2010 Odom
7,776,060 B2 8/2010 Mooradian et al.
7,776,065 B2 8/2010 Griffiths et al.
7,778,004 B2 8/2010 Nerheim et al.
7,779,614 B1 8/2010 McGonagle et al.
7,779,737 B2 8/2010 Newman, Jr. et al.
7,780,054 B2 8/2010 Wales
7,780,055 B2 8/2010 Scirica et al.
7,780,309 B2 8/2010 McMillan et al.
7,780,651 B2 8/2010 Madhani et al.
7,780,663 B2 8/2010 Yates et al.
7,780,685 B2 8/2010 Hunt et al.
7,782,382 B2 8/2010 Fujimura
7,784,662 B2 8/2010 Wales et al.
7,784,663 B2 8/2010 Shelton, IV
7,787,256 B2 8/2010 Chan et al.
7,789,283 B2 9/2010 Shah
7,789,875 B2 9/2010 Brock et al.
7,789,883 B2 9/2010 Takashino et al.
7,789,889 B2 9/2010 Zubik et al.
7,793,812 B2 9/2010 Moore et al.
7,794,475 B2 9/2010 Hess et al.
7,798,386 B2 9/2010 Schall et al.
7,799,039 B2 9/2010 Shelton, IV et al.
7,799,044 B2 9/2010 Johnston et al.
7,799,965 B2 9/2010 Patel et al.
7,803,151 B2 9/2010 Whitman
7,806,871 B2 10/2010 Li et al.
7,806,891 B2 10/2010 Nowlin et al.
7,810,690 B2 10/2010 Bilotti et al.
7,810,691 B2 10/2010 Boyden et al.
7,810,692 B2 10/2010 Hall et al.
7,810,693 B2 10/2010 Broehl et al.
7,811,275 B2 10/2010 Birk et al.
7,814,816 B2 10/2010 Alberti et al.
7,815,092 B2 10/2010 Whitman et al.
7,815,565 B2 10/2010 Stefanchik et al.
7,815,662 B2 10/2010 Spivey et al.
7,819,296 B2 10/2010 Hueil et al.
7,819,297 B2 10/2010 Doll et al.
7,819,298 B2 10/2010 Hall et al.
7,819,299 B2 10/2010 Shelton, IV et al.
7,819,799 B2 10/2010 Merril et al.
7,819,884 B2 10/2010 Lee et al.
7,819,885 B2 10/2010 Cooper
7,819,886 B2 10/2010 Whitfield et al.
7,819,894 B2 10/2010 Mitsuishi et al.
7,823,076 B2 10/2010 Borovsky et al.
7,823,592 B2 11/2010 Bettuchi et al.
7,823,760 B2 11/2010 Zemlok et al.
7,824,401 B2 11/2010 Manzo et al.
7,824,422 B2 11/2010 Benchetrit
7,824,426 B2 11/2010 Racenet et al.
7,828,189 B2 11/2010 Holsten et al.
7,828,794 B2 11/2010 Sartor
7,828,808 B2 11/2010 Hinman et al.
7,829,416 B2 11/2010 Kudou et al.
7,831,292 B2 11/2010 Quaid et al.
7,832,408 B2 11/2010 Shelton, IV et al.
7,832,611 B2 11/2010 Boyden et al.
7,832,612 B2 11/2010 Baxter et al.
7,833,234 B2 11/2010 Bailly et al.
7,835,823 B2 11/2010 Sillman et al.
7,836,400 B2 11/2010 May et al.
7,837,079 B2 11/2010 Holsten et al.
7,837,080 B2 11/2010 Schwemberger
7,837,081 B2 11/2010 Holsten et al.
7,837,425 B2 11/2010 Saeki et al.
7,837,685 B2 11/2010 Weinberg et al.
7,837,687 B2 11/2010 Harp
7,837,694 B2 11/2010 Tethrake et al.
7,838,789 B2 11/2010 Stoffers et al.
7,839,109 B2 11/2010 Carmen, Jr. et al.
7,840,253 B2 11/2010 Tremblay et al.
7,841,503 B2 11/2010 Sonnenschein et al.
7,842,025 B2 11/2010 Coleman et al.
7,842,028 B2 11/2010 Lee
7,843,158 B2 11/2010 Prisco
7,845,533 B2 12/2010 Marczyk et al.
7,845,534 B2 12/2010 Viola et al.
7,845,535 B2 12/2010 Scircia
7,845,536 B2 12/2010 Viola et al.
7,845,537 B2 12/2010 Shelton, IV et al.
7,845,538 B2 12/2010 Whitman
7,845,912 B2 12/2010 Sung et al.
7,846,085 B2 12/2010 Silverman et al.
7,846,149 B2 12/2010 Jankowski
7,846,161 B2 12/2010 Dumbauld et al.
7,848,066 B2 12/2010 Yanagishima
7,850,623 B2 12/2010 Griffin et al.
7,850,642 B2 12/2010 Moll et al.
7,850,982 B2 12/2010 Stopek et al.
7,853,813 B2 12/2010 Lee
7,854,735 B2 12/2010 Houser et al.
7,854,736 B2 12/2010 Ryan
7,857,183 B2 12/2010 Shelton, IV
7,857,184 B2 12/2010 Viola
7,857,185 B2 12/2010 Swayze et al.
7,857,186 B2 12/2010 Baxter et al.
7,857,813 B2 12/2010 Schmitz et al.
7,861,906 B2 1/2011 Doll et al.
7,862,502 B2 1/2011 Pool et al.
7,862,546 B2 1/2011 Conlon et al.
7,862,579 B2 1/2011 Ortiz et al.
7,866,525 B2 1/2011 Scirica
7,866,527 B2 1/2011 Hall et al.
7,866,528 B2 1/2011 Olson et al.
7,870,989 B2 1/2011 Viola et al.
7,871,418 B2 1/2011 Thompson et al.
7,871,440 B2 1/2011 Schwartz et al.
7,875,055 B2 1/2011 Cichocki, Jr.
7,877,869 B2 2/2011 Mehdizadeh et al.
7,879,063 B2 2/2011 Khosravi
7,879,070 B2 2/2011 Ortiz et al.
7,879,367 B2 2/2011 Heublein et al.
7,883,461 B2 2/2011 Albrecht et al.
7,883,465 B2 2/2011 Donofrio et al.
7,883,540 B2 2/2011 Niwa et al.
7,886,951 B2 2/2011 Hessler
7,886,952 B2 2/2011 Scirica et al.
7,887,530 B2 2/2011 Zemlok et al.
7,887,535 B2 2/2011 Lands et al.
7,887,536 B2 2/2011 Johnson et al.
7,887,563 B2 2/2011 Cummins
7,887,755 B2 2/2011 Mingerink et al.
7,891,531 B1 2/2011 Ward
7,891,532 B2 2/2011 Mastri et al.
7,892,200 B2 2/2011 Birk et al.
7,892,245 B2 2/2011 Liddicoat et al.
7,893,586 B2 2/2011 West et al.
7,896,214 B2 3/2011 Farascioni
7,896,215 B2 3/2011 Adams et al.
7,896,671 B2 3/2011 Kim et al.
7,896,869 B2 3/2011 DiSilvestro et al.
7,896,877 B2 3/2011 Hall et al.
7,896,895 B2 3/2011 Boudreaux et al.
7,896,897 B2 3/2011 Gresham et al.

(56) **References Cited**

U.S. PATENT DOCUMENTS

7,896,900 B2 3/2011 Frank et al.
7,898,198 B2 3/2011 Murphree
7,900,805 B2 3/2011 Shelton, IV et al.
7,900,806 B2 3/2011 Chen et al.
7,901,381 B2 3/2011 Birk et al.
7,905,380 B2 3/2011 Shelton, IV et al.
7,905,381 B2 3/2011 Baxter, III et al.
7,905,881 B2 3/2011 Masuda et al.
7,905,889 B2 3/2011 Catanese, III et al.
7,905,890 B2 3/2011 Whitfield et al.
7,905,902 B2 3/2011 Huitema et al.
7,909,039 B2 3/2011 Hur
7,909,191 B2 3/2011 Baker et al.
7,909,220 B2 3/2011 Viola
7,909,221 B2 3/2011 Viola et al.
7,909,224 B2 3/2011 Prommersberger
7,913,891 B2 3/2011 Doll et al.
7,913,893 B2 3/2011 Mastri et al.
7,914,521 B2 3/2011 Wang et al.
7,914,543 B2 3/2011 Roth et al.
7,914,551 B2 3/2011 Ortiz et al.
7,918,230 B2 4/2011 Whitman et al.
7,918,376 B1 4/2011 Knodel et al.
7,918,377 B2 4/2011 Measamer et al.
7,918,845 B2 4/2011 Saadat et al.
7,918,848 B2 4/2011 Lau et al.
7,918,861 B2 4/2011 Brock et al.
7,918,867 B2 4/2011 Dana et al.
7,922,061 B2 4/2011 Shelton, IV et al.
7,922,063 B2 4/2011 Zemlok et al.
7,922,743 B2 4/2011 Heinrich et al.
7,923,144 B2 4/2011 Kohn et al.
7,926,691 B2 4/2011 Viola et al.
7,926,692 B2 4/2011 Racenet et al.
7,927,328 B2 4/2011 Orszulak et al.
7,928,281 B2 4/2011 Augustine
7,930,040 B1 4/2011 Kelsch et al.
7,930,065 B2 4/2011 Larkin et al.
7,931,660 B2 4/2011 Aranyi et al.
7,931,695 B2 4/2011 Ringeisen
7,931,877 B2 4/2011 Steffens et al.
7,934,630 B2 5/2011 Shelton, IV et al.
7,934,631 B2 5/2011 Balbierz et al.
7,934,896 B2 5/2011 Schnier
7,935,130 B2 5/2011 Williams
7,935,773 B2 5/2011 Hadba et al.
7,936,142 B2 5/2011 Otsuka et al.
7,938,307 B2 5/2011 Bettuchi
7,939,152 B2 5/2011 Haskin et al.
7,941,865 B2 5/2011 Seman, Jr. et al.
7,942,300 B2 5/2011 Rethy et al.
7,942,303 B2 5/2011 Shah
7,942,890 B2 5/2011 D'Agostino et al.
7,944,175 B2 5/2011 Mori et al.
7,945,792 B2 5/2011 Cherpantier
7,945,798 B2 5/2011 Carlson et al.
7,946,453 B2 5/2011 Voegele et al.
7,947,011 B2 5/2011 Birk et al.
7,948,381 B2 5/2011 Lindsay et al.
7,950,560 B2 5/2011 Zemlok et al.
7,950,561 B2 5/2011 Aranyi
7,950,562 B2 5/2011 Beardsley et al.
7,951,071 B2 5/2011 Whitman et al.
7,951,166 B2 5/2011 Orban, III et al.
7,952,464 B2 5/2011 Nikitin et al.
7,954,682 B2 6/2011 Giordano et al.
7,954,684 B2 6/2011 Boudreaux
7,954,685 B2 6/2011 Viola
7,954,686 B2 6/2011 Baxter, III et al.
7,954,687 B2 6/2011 Zemlok et al.
7,954,688 B2 6/2011 Argentine et al.
7,955,253 B2 6/2011 Ewers et al.
7,955,257 B2 6/2011 Frasier et al.
7,955,322 B2 6/2011 Devengenzo et al.
7,955,327 B2 6/2011 Sartor et al.
7,955,380 B2 6/2011 Chu et al.
7,959,050 B2 6/2011 Smith et al.
7,959,051 B2 6/2011 Smith et al.
7,959,052 B2 6/2011 Sonnenschein et al.
7,963,432 B2 6/2011 Knodel et al.
7,963,433 B2 6/2011 Whitman et al.
7,963,913 B2 6/2011 Devengenzo et al.
7,963,963 B2 6/2011 Francischelli et al.
7,963,964 B2 6/2011 Santilli et al.
7,964,206 B2 6/2011 Suokas et al.
7,966,236 B2 6/2011 Noriega et al.
7,966,269 B2 6/2011 Bauer et al.
7,966,799 B2 6/2011 Morgan et al.
7,967,178 B2 6/2011 Scirica et al.
7,967,179 B2 6/2011 Olson et al.
7,967,180 B2 6/2011 Scirica
7,967,181 B2 6/2011 Viola et al.
7,967,791 B2 6/2011 Franer et al.
7,967,839 B2 6/2011 Flock et al.
7,972,298 B2 7/2011 Wallace et al.
7,972,315 B2 7/2011 Birk et al.
7,976,213 B2 7/2011 Bertolotti et al.
7,976,508 B2 7/2011 Hoag
7,976,563 B2 7/2011 Summerer
7,979,137 B2 7/2011 Tracey et al.
7,980,443 B2 7/2011 Scheib et al.
7,981,025 B2 7/2011 Pool et al.
7,981,102 B2 7/2011 Patel et al.
7,981,132 B2 7/2011 Dubrul et al.
7,987,405 B2 7/2011 Turner et al.
7,988,015 B2 8/2011 Mason, II et al.
7,988,026 B2 8/2011 Knodel et al.
7,988,027 B2 8/2011 Olson et al.
7,988,028 B2 8/2011 Farascioni et al.
7,988,779 B2 8/2011 Disalvo et al.
7,992,757 B2 8/2011 Wheeler et al.
7,993,360 B2 8/2011 Hacker et al.
7,994,670 B2 8/2011 Ji
7,997,054 B2 8/2011 Bertsch et al.
7,997,468 B2 8/2011 Farascioni
7,997,469 B2 8/2011 Olson et al.
8,002,696 B2 8/2011 Suzuki
8,002,784 B2 8/2011 Jinno et al.
8,002,785 B2 8/2011 Weiss et al.
8,002,795 B2 8/2011 Beetel
8,006,365 B2 8/2011 Levin et al.
8,006,885 B2 8/2011 Marczyk
8,006,889 B2 8/2011 Adams et al.
8,007,370 B2 8/2011 Hirsch et al.
8,007,465 B2 8/2011 Birk et al.
8,007,479 B2 8/2011 Birk et al.
8,007,511 B2 8/2011 Brock et al.
8,007,513 B2 8/2011 Nalagatla et al.
8,008,598 B2 8/2011 Whitman et al.
8,010,180 B2 8/2011 Quaid et al.
8,011,550 B2 9/2011 Aranyi et al.
8,011,551 B2 9/2011 Marczyk et al.
8,011,553 B2 9/2011 Mastri et al.
8,011,555 B2 9/2011 Tarinelli et al.
8,012,170 B2 9/2011 Whitman et al.
8,016,176 B2 9/2011 Kasvikis et al.
8,016,177 B2 9/2011 Bettuchi et al.
8,016,178 B2 9/2011 Olson et al.
8,016,849 B2 9/2011 Wenchell
8,016,855 B2 9/2011 Whitman et al.
8,016,858 B2 9/2011 Whitman
8,016,881 B2 9/2011 Furst
8,020,741 B2 9/2011 Cole et al.
8,020,742 B2 9/2011 Marczyk
8,020,743 B2 9/2011 Shelton, IV
8,021,375 B2 9/2011 Aldrich et al.
8,025,199 B2 9/2011 Whitman et al.
8,025,896 B2 9/2011 Malaviya et al.
8,028,835 B2 10/2011 Yasuda et al.
8,028,882 B2 10/2011 Viola
8,028,883 B2 10/2011 Stopek
8,028,884 B2 10/2011 Sniffin et al.
8,028,885 B2 10/2011 Smith et al.
8,029,510 B2 10/2011 Hoegerle

(56) **References Cited**

U.S. PATENT DOCUMENTS

8,031,069 B2 10/2011 Cohn et al.
8,033,438 B2 10/2011 Scirica
8,033,439 B2 10/2011 Racenet et al.
8,033,440 B2 10/2011 Wenchell et al.
8,033,442 B2 10/2011 Racenet et al.
8,034,077 B2 10/2011 Smith et al.
8,034,337 B2 10/2011 Simard
8,034,363 B2 10/2011 Li et al.
8,035,487 B2 10/2011 Malackowski
8,037,591 B2 10/2011 Spivey et al.
8,038,044 B2 10/2011 Viola
8,038,045 B2 10/2011 Bettuchi et al.
8,038,046 B2 10/2011 Smith et al.
8,038,686 B2 10/2011 Huitema et al.
8,043,207 B2 10/2011 Adams
8,043,328 B2 10/2011 Hahnen et al.
8,044,536 B2 10/2011 Nguyen et al.
8,044,604 B2 10/2011 Hagino et al.
8,047,236 B2 11/2011 Perry
8,048,503 B2 11/2011 Farnsworth et al.
8,052,636 B2 11/2011 Moll et al.
8,052,697 B2 11/2011 Phillips
8,056,787 B2 11/2011 Boudreaux et al.
8,056,788 B2 11/2011 Mastri et al.
8,056,789 B1 11/2011 White et al.
8,057,508 B2 11/2011 Shelton, IV
8,058,771 B2 11/2011 Giordano et al.
8,060,250 B2 11/2011 Reiland et al.
8,061,014 B2 11/2011 Smith et al.
8,061,576 B2 11/2011 Cappola
8,062,236 B2 11/2011 Soltz
8,062,306 B2 11/2011 Nobis et al.
8,062,330 B2 11/2011 Prommersberger et al.
8,063,619 B2 11/2011 Zhu et al.
8,066,158 B2 11/2011 Vogel et al.
8,066,166 B2 11/2011 Demmy et al.
8,066,167 B2 11/2011 Measamer et al.
8,066,168 B2 11/2011 Vidal et al.
8,066,720 B2 11/2011 Knodel et al.
D650,074 S 12/2011 Hunt et al.
D650,789 S 12/2011 Arnold
8,070,033 B2 12/2011 Milliman et al.
8,070,034 B1 12/2011 Knodel
8,070,035 B2 12/2011 Holsten et al.
8,070,743 B2 12/2011 Kagan et al.
8,074,858 B2 12/2011 Marczyk
8,074,859 B2 12/2011 Kostrzewski
8,074,861 B2 12/2011 Ehrenfels et al.
8,075,476 B2 12/2011 Vargas
8,075,571 B2 12/2011 Vitali et al.
8,079,950 B2 12/2011 Stern et al.
8,079,989 B2 12/2011 Birk et al.
8,080,004 B2 12/2011 Downey et al.
8,083,118 B2 12/2011 Milliman et al.
8,083,119 B2 12/2011 Prommersberger
8,083,120 B2 12/2011 Shelton, IV et al.
8,084,001 B2 12/2011 Burns et al.
8,084,969 B2 12/2011 David et al.
8,085,013 B2 12/2011 Wei et al.
8,087,562 B1 1/2012 Manoux et al.
8,087,563 B2 1/2012 Milliman et al.
8,089,509 B2 1/2012 Chatenever et al.
8,091,753 B2 1/2012 Viola
8,091,756 B2 1/2012 Viola
8,092,443 B2 1/2012 Bischoff
8,092,932 B2 1/2012 Phillips et al.
8,093,572 B2 1/2012 Kuduvalli
8,096,458 B2 1/2012 Hessler
8,096,459 B2 1/2012 Ortiz et al.
8,097,017 B2 1/2012 Viola
8,100,310 B2 1/2012 Zemlok
8,100,824 B2 1/2012 Hegeman et al.
8,100,872 B2 1/2012 Patel
8,102,138 B2 1/2012 Sekine et al.
8,102,278 B2 1/2012 Deck et al.
8,105,320 B2 1/2012 Manzo
8,105,350 B2 1/2012 Lee et al.
8,107,925 B2 1/2012 Natsuno et al.
8,108,033 B2 1/2012 Drew et al.
8,108,072 B2 1/2012 Zhao et al.
8,109,426 B2 2/2012 Milliman et al.
8,110,208 B1 2/2012 Hen
8,113,405 B2 2/2012 Milliman
8,113,407 B2 2/2012 Holsten et al.
8,113,408 B2 2/2012 Wenchell et al.
8,113,410 B2 2/2012 Hall et al.
8,114,017 B2 2/2012 Bacher
8,114,100 B2 2/2012 Smith et al.
8,114,345 B2 2/2012 Dlugos, Jr. et al.
8,118,206 B2 2/2012 Zand et al.
8,118,207 B2 2/2012 Racenet et al.
8,120,301 B2 2/2012 Goldberg et al.
8,122,128 B2 2/2012 Burke, II et al.
8,123,103 B2 2/2012 Milliman
8,123,523 B2 2/2012 Carron et al.
8,123,766 B2 2/2012 Bauman et al.
8,123,767 B2 2/2012 Bauman et al.
8,125,168 B2 2/2012 Johnson et al.
8,127,975 B2 3/2012 Olson et al.
8,127,976 B2 3/2012 Scirica et al.
8,128,624 B2 3/2012 Couture et al.
8,128,643 B2 3/2012 Aranyi et al.
8,128,645 B2 3/2012 Sonnenschein et al.
8,128,662 B2 3/2012 Altarac et al.
8,132,703 B2 3/2012 Milliman et al.
8,132,705 B2 3/2012 Viola et al.
8,132,706 B2 3/2012 Marczyk et al.
8,133,500 B2 3/2012 Ringeisen et al.
8,134,306 B2 3/2012 Drader et al.
8,136,711 B2 3/2012 Beardsley et al.
8,136,712 B2 3/2012 Zingman
8,136,713 B2 3/2012 Hathaway et al.
8,137,339 B2 3/2012 Jinno et al.
8,140,417 B2 3/2012 Shibata
8,141,762 B2 3/2012 Bedi et al.
8,141,763 B2 3/2012 Milliman
8,142,200 B2 3/2012 Crunkilton et al.
8,142,425 B2 3/2012 Eggers
8,142,461 B2 3/2012 Houser et al.
8,142,515 B2 3/2012 Therin et al.
8,143,520 B2 3/2012 Cutler
8,146,790 B2 4/2012 Milliman
8,147,421 B2 4/2012 Farquhar et al.
8,147,456 B2 4/2012 Fisher et al.
8,147,485 B2 4/2012 Wham et al.
8,152,041 B2 4/2012 Kostrzewski
8,152,756 B2 4/2012 Webster et al.
8,154,239 B2 4/2012 Katsuki et al.
8,157,145 B2 4/2012 Shelton, IV et al.
8,157,148 B2 4/2012 Scirica
8,157,151 B2 4/2012 Ingmanson et al.
8,157,152 B2 4/2012 Holsten et al.
8,157,153 B2 4/2012 Shelton, IV et al.
8,157,793 B2 4/2012 Omori et al.
8,157,834 B2 4/2012 Conlon
8,161,977 B2 4/2012 Shelton, IV et al.
8,162,138 B2 4/2012 Bettenhausen et al.
8,162,197 B2 4/2012 Mastri et al.
8,162,668 B2 4/2012 Toly
8,162,933 B2 4/2012 Francischelli et al.
8,162,965 B2 4/2012 Reschke et al.
8,167,185 B2 5/2012 Shelton, IV et al.
8,167,622 B2 5/2012 Zhou
8,167,895 B2 5/2012 D'Agostino et al.
8,167,898 B1 5/2012 Schaller et al.
8,170,241 B2 5/2012 Roe et al.
8,172,004 B2 5/2012 Ho
8,172,120 B2 5/2012 Boyden et al.
8,172,122 B2 5/2012 Kasvikis et al.
8,172,124 B2 5/2012 Shelton, IV et al.
8,177,776 B2 5/2012 Humayun et al.
8,177,797 B2 5/2012 Shimoji et al.
8,179,705 B2 5/2012 Chapuis
8,180,458 B2 5/2012 Kane et al.

(56) **References Cited**

U.S. PATENT DOCUMENTS

8,181,839 B2 5/2012 Beetel
8,181,840 B2 5/2012 Milliman
8,182,422 B2 5/2012 Bayer et al.
8,182,444 B2 5/2012 Uber, III et al.
8,183,807 B2 5/2012 Tsai et al.
8,186,555 B2 5/2012 Shelton, IV et al.
8,186,556 B2 5/2012 Viola
8,186,558 B2 5/2012 Sapienza
8,186,560 B2 5/2012 Hess et al.
8,190,238 B2 5/2012 Moll et al.
8,191,752 B2 6/2012 Scirica
8,192,350 B2 6/2012 Ortiz et al.
8,192,460 B2 6/2012 Orban, III et al.
8,192,651 B2 6/2012 Young et al.
8,193,129 B2 6/2012 Tagawa et al.
8,196,795 B2 6/2012 Moore et al.
8,196,796 B2 6/2012 Shelton, IV et al.
8,197,501 B2 6/2012 Shadeck et al.
8,197,502 B2 6/2012 Smith et al.
8,197,837 B2 6/2012 Jamiolkowski et al.
8,201,720 B2 6/2012 Hessler
8,201,721 B2 6/2012 Zemlok et al.
8,202,549 B2 6/2012 Stucky et al.
8,205,779 B2 6/2012 Ma et al.
8,205,780 B2 6/2012 Sorrentino et al.
8,205,781 B2 6/2012 Baxter, III et al.
8,207,863 B2 6/2012 Neubauer et al.
8,210,411 B2 7/2012 Yates et al.
8,210,414 B2 7/2012 Bettuchi et al.
8,210,415 B2 7/2012 Ward
8,210,416 B2 7/2012 Milliman et al.
8,210,721 B2 7/2012 Chen et al.
8,211,125 B2 7/2012 Spivey
8,214,019 B2 7/2012 Govari et al.
8,215,531 B2 7/2012 Shelton, IV et al.
8,215,532 B2 7/2012 Marczyk
8,215,533 B2 7/2012 Viola et al.
8,220,468 B2 7/2012 Cooper et al.
8,220,688 B2 7/2012 Laurent et al.
8,220,690 B2 7/2012 Hess et al.
8,221,402 B2 7/2012 Francischelli et al.
8,221,424 B2 7/2012 Cha
8,221,433 B2 7/2012 Lozier et al.
8,225,799 B2 7/2012 Bettuchi
8,225,979 B2 7/2012 Farascioni et al.
8,226,553 B2 7/2012 Shelton, IV et al.
8,226,635 B2 7/2012 Petrie et al.
8,226,675 B2 7/2012 Houser et al.
8,226,715 B2 7/2012 Hwang et al.
8,227,946 B2 7/2012 Kim
8,228,020 B2 7/2012 Shin et al.
8,228,048 B2 7/2012 Spencer
8,229,549 B2 7/2012 Whitman et al.
8,230,235 B2 7/2012 Goodman et al.
8,231,040 B2 7/2012 Zemlok et al.
8,231,042 B2 7/2012 Hessler et al.
8,231,043 B2 7/2012 Tarinelli et al.
8,235,272 B2 8/2012 Nicholas et al.
8,235,274 B2 8/2012 Cappola
8,236,010 B2 8/2012 Ortiz et al.
8,236,011 B2 8/2012 Harris et al.
8,236,020 B2 8/2012 Smith et al.
8,237,388 B2 8/2012 Jinno et al.
8,240,537 B2 8/2012 Marczyk
8,241,271 B2 8 2012 Millman et al.
8,241,284 B2 8/2012 Dycus et al.
8,241,308 B2 8/2012 Kortenbach et al.
8,241,322 B2 8/2012 Whitman et al.
8,245,594 B2 8/2012 Rogers et al.
8,245,898 B2 8/2012 Smith et al.
8,245,899 B2 8/2012 Swensgard et al.
8,245,900 B2 8/2012 Scirica
8,245,901 B2 8/2012 Stopek
8,246,608 B2 8/2012 Omori et al.
8,246,637 B2 8/2012 Viola et al.
8,252,009 B2 8/2012 Weller et al.
8,256,654 B2 9/2012 Bettuchi et al.
8,256,655 B2 9/2012 Sniffin et al.
8,256,656 B2 9/2012 Milliman et al.
8,257,251 B2 9/2012 Shelton, IV et al.
8,257,356 B2 9/2012 Bleich et al.
8,257,386 B2 9/2012 Lee et al.
8,257,391 B2 9/2012 Orban, III et al.
8,257,634 B2 9/2012 Scirica
8,258,745 B2 9/2012 Smith et al.
8,261,958 B1 9/2012 Knodel
8,262,560 B2 9/2012 Whitman
8,262,655 B2 9/2012 Ghabrial et al.
8,266,232 B2 9/2012 Piper et al.
8,267,300 B2 9/2012 Boudreaux
8,267,849 B2 9/2012 Wazer et al.
8,267,924 B2 9/2012 Zemlok et al.
8,267,946 B2 9/2012 Whitfield et al.
8,267,951 B2 9/2012 Whayne et al.
8,268,344 B2 9/2012 Ma et al.
8,269,121 B2 9/2012 Smith
8,272,553 B2 9/2012 Mastri et al.
8,272,554 B2 9/2012 Whitman et al.
8,272,918 B2 9/2012 Lam
8,273,404 B2 9/2012 Dave et al.
8,276,594 B2 10/2012 Shah
8,276,801 B2 10/2012 Zemlok et al.
8,276,802 B2 10/2012 Kostrzewski
8,277,473 B2 10/2012 Sunaoshi et al.
8,281,446 B2 10/2012 Moskovich
8,281,973 B2 10/2012 Wenchell et al.
8,281,974 B2 10/2012 Hessler et al.
8,282,654 B2 10/2012 Ferrari et al.
8,285,367 B2 10/2012 Hyde et al.
8,286,723 B2 10/2012 Puzio et al.
8,286,845 B2 10/2012 Perry et al.
8,286,846 B2 10/2012 Smith et al.
8,286,847 B2 10/2012 Taylor
8,287,487 B2 10/2012 Estes
8,287,522 B2 10/2012 Moses et al.
8,287,561 B2 10/2012 Nunez et al.
8,288,984 B2 10/2012 Yang
8,289,403 B2 10/2012 Dobashi et al.
8,290,883 B2 10/2012 Takeuchi et al.
8,292,147 B2 10/2012 Viola
8,292,148 B2 10/2012 Viola
8,292,150 B2 10/2012 Bryant
8,292,151 B2 10/2012 Viola
8,292,152 B2 10/2012 Milliman et al.
8,292,155 B2 10/2012 Shelton, IV et al.
8,292,157 B2 10/2012 Smith et al.
8,292,158 B2 10/2012 Sapienza
8,292,801 B2 10/2012 Dejima et al.
8,292,888 B2 10/2012 Whitman
8,292,906 B2 10/2012 Taylor et al.
8,294,399 B2 10/2012 Suzuki et al.
8,298,161 B2 10/2012 Vargas
8,298,189 B2 10/2012 Fisher et al.
8,298,233 B2 10/2012 Mueller
8,298,677 B2 10/2012 Wiesner et al.
8,302,323 B2 11/2012 Fortier et al.
8,303,621 B2 11/2012 Miyamoto et al.
8,308,040 B2 11/2012 Huang et al.
8,308,041 B2 11/2012 Kostrzewski
8,308,042 B2 11/2012 Aranyi
8,308,043 B2 11/2012 Bindra et al.
8,308,046 B2 11/2012 Prommersberger
8,308,659 B2 11/2012 Scheibe et al.
8,308,725 B2 11/2012 Bell et al.
8,310,188 B2 11/2012 Nakai
8,313,496 B2 11/2012 Sauer et al.
8,313,499 B2 11/2012 Magnusson et al.
8,313,509 B2 11/2012 Kostrzewski
8,317,070 B2 11/2012 Hueil et al.
8,317,071 B1 11/2012 Knodel
8,317,074 B2 11/2012 Ortiz et al.
8,317,437 B2 11/2012 Merkley et al.
8,317,744 B2 11/2012 Kirschenman
8,317,790 B2 11/2012 Bell et al.

(56) **References Cited**

U.S. PATENT DOCUMENTS

8,319,002 B2 11/2012 Daniels et al.
D672,784 S 12/2012 Clanton et al.
8,322,455 B2 12/2012 Shelton, IV et al.
8,322,589 B2 12/2012 Boudreaux
8,322,590 B2 12/2012 Patel et al.
8,322,901 B2 12/2012 Michelotti
8,323,271 B2 12/2012 Humayun et al.
8,323,789 B2 12/2012 Rozhin et al.
8,324,585 B2 12/2012 McBroom et al.
8,327,514 B2 12/2012 Kim
8,328,061 B2 12/2012 Kasvikis
8,328,062 B2 12/2012 Viola
8,328,063 B2 12/2012 Milliman et al.
8,328,064 B2 12/2012 Racenet et al.
8,328,065 B2 12/2012 Shah
8,328,802 B2 12/2012 Deville et al.
8,328,823 B2 12/2012 Aranyi et al.
8,333,313 B2 12/2012 Boudreaux et al.
8,333,691 B2 12/2012 Schaaf
8,333,764 B2 12/2012 Francischelli et al.
8,333,779 B2 12/2012 Smith et al.
8,334,468 B2 12/2012 Palmer et al.
8,336,753 B2 12/2012 Olson et al.
8,336,754 B2 12/2012 Cappola et al.
8,342,377 B2 1/2013 Milliman et al.
8,342,378 B2 1/2013 Marczyk et al.
8,342,379 B2 1/2013 Whitman et al.
8,342,380 B2 1/2013 Viola
8,343,150 B2 1/2013 Artale
8,347,978 B2 1/2013 Forster et al.
8,348,118 B2 1/2013 Segura
8,348,123 B2 1/2013 Scirica et al.
8,348,124 B2 1/2013 Scirica
8,348,125 B2 1/2013 Viola et al.
8,348,126 B2 1/2013 Olson et al.
8,348,127 B2 1/2013 Marczyk
8,348,129 B2 1/2013 Bedi et al.
8,348,130 B2 1/2013 Shah et al.
8,348,131 B2 1/2013 Omaits et al.
8,348,837 B2 1/2013 Wenchell
8,348,948 B2 1/2013 Bahney
8,348,959 B2 1/2013 Wolford et al.
8,348,972 B2 1/2013 Soltz et al.
8,349,987 B2 1/2013 Kapiamba et al.
8,352,004 B2 1/2013 Mannheimer et al.
8,353,437 B2 1/2013 Boudreaux
8,353,438 B2 1/2013 Baxter, III et al.
8,353,439 B2 1/2013 Baxter, III et al.
8,356,740 B1 1/2013 Knodel
8,357,144 B2 1/2013 Whitman et al.
8,357,158 B2 1/2013 McKenna et al.
8,357,161 B2 1/2013 Mueller
8,359,174 B2 1/2013 Nakashima et al.
8,360,296 B2 1/2013 Zingman
8,360,297 B2 1/2013 Shelton, IV et al.
8,360,298 B2 1/2013 Farascioni et al.
8,360,299 B2 1/2013 Zemlok et al.
8,361,501 B2 1/2013 DiTizio et al.
D676,866 S 2/2013 Chaudhri
8,365,972 B2 2/2013 Aranyi et al.
8,365,973 B1 2/2013 White et al.
8,365,975 B1 2/2013 Manoux et al.
8,365,976 B2 2/2013 Hess et al.
8,366,559 B2 2/2013 Papenfuss et al.
8,366,719 B2 2/2013 Markey et al.
8,366,787 B2 2/2013 Brown et al.
8,368,327 B2 2/2013 Benning et al.
8,369,056 B2 2/2013 Senriuchi et al.
8,371,393 B2 2/2013 Higuchi et al.
8,371,491 B2 2/2013 Huitema et al.
8,371,492 B2 2/2013 Aranyi et al.
8,371,493 B2 2/2013 Aranyi et al.
8,371,494 B2 2/2013 Racenet et al.
8,372,094 B2 2/2013 Bettuchi et al.
8,374,723 B2 2/2013 Zhao et al.
8,376,865 B2 2/2013 Forster et al.
8,377,029 B2 2/2013 Nagao et al.
8,377,044 B2 2/2013 Coe et al.
8,377,059 B2 2/2013 Deville et al.
8,381,828 B2 2/2013 Whitman et al.
8,381,834 B2 2/2013 Barhitte et al.
8,382,773 B2 2/2013 Whitfield et al.
8,382,790 B2 2/2013 Uenohara et al.
D677,273 S 3/2013 Randall et al.
8,387,848 B2 3/2013 Johnson et al.
8,388,633 B2 3/2013 Rousseau et al.
8,389,588 B2 3/2013 Ringeisen et al.
8,393,513 B2 3/2013 Jankowski
8,393,514 B2 3/2013 Shelton, IV et al.
8,393,516 B2 3/2013 Kostrzewski
8,397,832 B2 3/2013 Blickle et al.
8,397,971 B2 3/2013 Yates et al.
8,397,972 B2 3/2013 Kostrzewski
8,397,973 B1 3/2013 Hausen
8,398,633 B2 3/2013 Mueller
8,398,669 B2 3/2013 Kim
8,398,673 B2 3/2013 Hinchliffe et al.
8,398,674 B2 3/2013 Prestel
8,400,108 B2 3/2013 Powell et al.
8,400,851 B2 3/2013 Byun
8,403,138 B2 3/2013 Weisshaupt et al.
8,403,195 B2 3/2013 Beardsley et al.
8,403,196 B2 3/2013 Beardsley et al.
8,403,198 B2 3/2013 Sorrentino et al.
8,403,832 B2 3/2013 Cunningham et al.
8,403,926 B2 3/2013 Nobis et al.
8,403,945 B2 3/2013 Whitfield et al.
8,403,946 B2 3/2013 Whitfield et al.
8,403,950 B2 3/2013 Palmer et al.
D680,646 S 4/2013 Hunt et al.
8,408,439 B2 4/2013 Huang et al.
8,408,442 B2 4/2013 Racenet et al.
8,409,079 B2 4/2013 Okamoto et al.
8,409,174 B2 4/2013 Omori
8,409,175 B2 4/2013 Lee et al.
8,409,211 B2 4/2013 Baroud
8,409,222 B2 4/2013 Whitfield et al.
8,409,223 B2 4/2013 Sorrentino et al.
8,409,234 B2 4/2013 Stahler et al.
8,411,500 B2 4/2013 Gapihan et al.
8,413,661 B2 4/2013 Rousseau et al.
8,413,870 B2 4/2013 Pastorelli et al.
8,413,871 B2 4/2013 Racenet et al.
8,413,872 B2 4/2013 Patel
8,414,469 B2 4/2013 Diolaiti
8,414,577 B2 4/2013 Boudreaux et al.
8,414,598 B2 4/2013 Brock et al.
8,418,073 B2 4/2013 Mohr et al.
8,418,906 B2 4/2013 Farascioni et al.
8,418,907 B2 4/2013 Johnson et al.
8,418,908 B1 4/2013 Beardsley
8,418,909 B2 4/2013 Kostrzewski
8,419,635 B2 4/2013 Shelton, IV et al.
8,419,717 B2 4/2013 Diolaiti et al.
8,419,747 B2 4/2013 Hinman et al.
8,419,754 B2 4/2013 Laby et al.
8,419,755 B2 4/2013 Deem et al.
8,423,182 B2 4/2013 Robinson et al.
8,424,737 B2 4/2013 Scirica
8,424,739 B2 4/2013 Racenet et al.
8,424,740 B2 4/2013 Shelton, IV et al.
8,424,741 B2 4/2013 McGuckin, Jr. et al.
8,425,600 B2 4/2013 Maxwell
8,427,430 B2 4/2013 Lee et al.
8,430,292 B2 4/2013 Patel et al.
8,430,892 B2 4/2013 Bindra et al.
8,430,898 B2 4/2013 Wiener et al.
8,435,257 B2 5/2013 Smith et al.
8,439,246 B1 5/2013 Knodel
8,439,830 B2 5/2013 McKinley et al.
8,444,036 B2 5/2013 Shelton, IV
8,444,037 B2 5/2013 Nicholas et al.
8,444,549 B2 5/2013 Viola et al.
8,449,536 B2 5/2013 Selig

(56) **References Cited**

U.S. PATENT DOCUMENTS

8,449,560 B2 5/2013 Roth et al.
8,453,904 B2 6/2013 Eskaros et al.
8,453,906 B2 6/2013 Huang et al.
8,453,907 B2 6/2013 Laurent et al.
8,453,908 B2 6/2013 Bedi et al.
8,453,912 B2 6/2013 Mastri et al.
8,453,914 B2 6/2013 Laurent et al.
8,454,495 B2 6/2013 Kawano et al.
8,454,551 B2 6/2013 Allen et al.
8,454,628 B2 6/2013 Smith et al.
8,454,640 B2 6/2013 Johnston et al.
8,457,757 B2 6/2013 Cauller et al.
8,459,520 B2 6/2013 Giordano et al.
8,459,521 B2 6/2013 Zemlok et al.
8,459,524 B2 6/2013 Pribanic et al.
8,459,525 B2 6/2013 Yates et al.
8,464,922 B2 6/2013 Marczyk
8,464,923 B2 6/2013 Shelton, IV
8,464,924 B2 6/2013 Gresham et al.
8,464,925 B2 6/2013 Hull et al.
8,465,475 B2 6/2013 Isbell, Jr.
8,465,502 B2 6/2013 Zergiebel
8,465,515 B2 6/2013 Drew et al.
8,469,254 B2 6/2013 Czernik et al.
8,469,946 B2 6/2013 Sugita
8,469,973 B2 6/2013 Meade et al.
8,470,355 B2 6/2013 Skalla et al.
D686,240 S 7/2013 Lin
D686,244 S 7/2013 Moriya et al.
8,474,677 B2 7/2013 Woodard, Jr. et al.
8,475,453 B2 7/2013 Marczyk et al.
8,475,454 B1 7/2013 Alshemari
8,475,474 B2 7/2013 Bombard et al.
8,479,968 B2 7/2013 Hodgkinson et al.
8,479,969 B2 7/2013 Shelton, IV
8,480,703 B2 7/2013 Nicholas et al.
8,483,509 B2 7/2013 Matsuzaka
8,485,412 B2 7/2013 Shelton, IV et al.
8,485,413 B2 7/2013 Scheib et al.
8,485,970 B2 7/2013 Widenhouse et al.
8,486,047 B2 7/2013 Stopek
8,487,199 B2 7/2013 Palmer et al.
8,487,487 B2 7/2013 Dietz et al.
8,490,851 B2 7/2013 Blier et al.
8,490,852 B2 7/2013 Viola
8,490,853 B2 7/2013 Criscuolo et al.
8,491,581 B2 7/2013 Deville et al.
8,491,603 B2 7/2013 Yeung et al.
8,496,153 B2 7/2013 Demmy et al.
8,496,154 B2 7/2013 Marczyk et al.
8,496,156 B2 7/2013 Sniffin et al.
8,496,683 B2 7/2013 Prommersberger et al.
8,498,691 B2 7/2013 Moll et al.
8,499,673 B2 8/2013 Keller
8,499,966 B2 8/2013 Palmer et al.
8,499,992 B2 8/2013 Whitman et al.
8,499,993 B2 8/2013 Shelton, IV et al.
8,499,994 B2 8/2013 D'Arcangelo
8,500,721 B2 8/2013 Jinno
8,500,762 B2 8/2013 Sholev et al.
8,502,091 B2 8/2013 Palmer et al.
8,505,799 B2 8/2013 Viola et al.
8,505,801 B2 8/2013 Ehrenfels et al.
8,506,555 B2 8/2013 Ruiz Morales
8,506,557 B2 8 2013 Zemlok et al.
8,506,580 B2 8/2013 Zergiebel et al.
8,506,581 B2 8/2013 Wingardner, III et al.
8,511,308 B2 8/2013 Hecox et al.
8,512,359 B2 8/2013 Whitman et al.
8,512,402 B2 8/2013 Marczyk et al.
8,517,239 B2 8/2013 Scheib et al.
8,517,241 B2 8/2013 Nicholas et al.
8,517,243 B2 8/2013 Giordano et al.
8,517,244 B2 8/2013 Shelton, IV et al.
8,517,938 B2 8/2013 Eisenhardt et al.
8,518,024 B2 8/2013 Williams et al.
8,521,273 B2 8/2013 Kliman
8,523,042 B2 9/2013 Masiakos et al.
8,523,043 B2 9/2013 Ullrich et al.
8,523,787 B2 9/2013 Ludwin et al.
8,523,881 B2 9/2013 Cabiri et al.
8,523,882 B2 9/2013 Huitema et al.
8,523,900 B2 9/2013 Jinno et al.
8,529,588 B2 9/2013 Ahlberg et al.
8,529,599 B2 9/2013 Holsten
8,529,600 B2 9/2013 Woodard, Jr. et al.
8,529,819 B2 9/2013 Ostapoff et al.
8,531,153 B2 9/2013 Baarman et al.
8,532,747 B2 9/2013 Nock et al.
8,534,527 B2 9/2013 Brendel et al.
8,534,528 B2 9/2013 Shelton, IV
8,535,304 B2 9/2013 Sklar et al.
8,535,340 B2 9/2013 Allen
8,539,866 B2 9/2013 Nayak et al.
8,540,128 B2 9/2013 Shelton, IV et al.
8,540,129 B2 9/2013 Baxter, III et al.
8,540,130 B2 9/2013 Moore et al.
8,540,131 B2 9/2013 Swayze
8,540,133 B2 9/2013 Bedi et al.
8,540,646 B2 9/2013 Mendez-Coll
8,540,733 B2 9/2013 Whitman et al.
8,540,735 B2 9/2013 Mitelberg et al.
8,550,984 B2 10/2013 Takemoto
8,551,076 B2 10/2013 Duval et al.
8,555,660 B2 10/2013 Takenaka et al.
8,556,151 B2 10/2013 Viola
8,556,918 B2 10/2013 Bauman et al.
8,556,935 B1 10/2013 Knodel et al.
8,560,147 B2 10/2013 Taylor et al.
8,561,617 B2 10/2013 Lindh et al.
8,561,870 B2 10/2013 Baxter, III et al.
8,561,871 B2 10/2013 Rajappa et al.
8,561,873 B2 10/2013 Ingmanson et al.
8,562,592 B2 10/2013 Conlon et al.
8,562,598 B2 10/2013 Falkenstein et al.
8,567,656 B2 10/2013 Shelton, IV et al.
8,568,416 B2 10/2013 Schmitz et al.
8,568,425 B2 10/2013 Ross et al.
D692,916 S 11/2013 Granchi et al.
8,573,459 B2 11/2013 Smith et al.
8,573,461 B2 11/2013 Shelton, IV et al.
8,573,462 B2 11/2013 Smith et al.
8,573,465 B2 11/2013 Shelton, IV
8,574,199 B2 11/2013 von Bulow et al.
8,574,263 B2 11/2013 Mueller
8,575,880 B2 11/2013 Grantz
8,575,895 B2 11/2013 Garrastacho et al.
8,579,176 B2 11/2013 Smith et al.
8,579,178 B2 11/2013 Holsten et al.
8,579,897 B2 11/2013 Vakharia et al.
8,579,937 B2 11/2013 Gresham
8,584,919 B2 11/2013 Hueil et al.
8,584,920 B2 11/2013 Hodgkinson
8,584,921 B2 11/2013 Scirica
8,585,583 B2 11/2013 Sakaguchi et al.
8,585,598 B2 11/2013 Razzaque et al.
8,585,721 B2 11/2013 Kirsch
8,590,760 B2 11/2013 Cummins et al.
8,590,762 B2 11/2013 Hess et al.
8,590,764 B2 11/2013 Hartwick et al.
8,591,400 B2 11/2013 Sugiyama
8,596,515 B2 12/2013 Okoniewski
8,597,745 B2 12/2013 Farnsworth et al.
8,599,450 B2 12/2013 Kubo et al.
8,602,125 B2 12/2013 King
8,602,287 B2 12/2013 Yates et al.
8,602,288 B2 12/2013 Shelton, IV et al.
8,603,077 B2 12/2013 Cooper et al.
8,603,089 B2 12/2013 Viola
8,603,110 B2 12/2013 Maruyama et al.
8,603,135 B2 12/2013 Mueller
8,608,043 B2 12/2013 Scirica
8,608,044 B2 12/2013 Hueil et al.
8,608,045 B2 12/2013 Smith et al.

(56) **References Cited**

U.S. PATENT DOCUMENTS

8,608,046 B2 12/2013 Laurent et al.
8,608,745 B2 12/2013 Guzman et al.
8,613,383 B2 12/2013 Beckman et al.
8,613,384 B2 12/2013 Pastorelli et al.
8,616,427 B2 12/2013 Viola
8,616,431 B2 12/2013 Timm et al.
8,617,155 B2 12/2013 Johnson et al.
8,620,473 B2 12/2013 Diolaiti et al.
8,622,274 B2 1/2014 Yates et al.
8,622,275 B2 1/2014 Baxter, III et al.
8,627,993 B2 1/2014 Smith et al.
8,627,994 B2 1/2014 Zemlok et al.
8,627,995 B2 1/2014 Smith et al.
8,628,467 B2 1/2014 Whitman et al.
8,628,518 B2 1/2014 Blumenkranz et al.
8,628,544 B2 1/2014 Farascioni
8,628,545 B2 1/2014 Cabrera et al.
8,631,987 B2 1/2014 Shelton, IV et al.
8,631,992 B1 1/2014 Hausen et al.
8,631,993 B2 1/2014 Kostrzewski
8,632,462 B2 1/2014 Yoo et al.
8,632,525 B2 1/2014 Kerr et al.
8,632,535 B2 1/2014 Shelton, IV et al.
8,632,539 B2 1/2014 Twomey et al.
8,632,563 B2 1/2014 Nagase et al.
8,636,187 B2 1/2014 Hueil et al.
8,636,190 B2 1/2014 Zemlok et al.
8,636,191 B2 1/2014 Meagher
8,636,193 B2 1/2014 Whitman et al.
8,636,736 B2 1/2014 Yates et al.
8,636,766 B2 1/2014 Milliman et al.
8,639,936 B2 1/2014 Hu et al.
8,640,788 B2 2/2014 Dachs, II et al.
8,646,674 B2 2/2014 Schulte et al.
8,647,258 B2 2/2014 Aranyi et al.
8,652,120 B2 2/2014 Giordano et al.
8,652,151 B2 2/2014 Lehman et al.
8,652,155 B2 2/2014 Houser et al.
8,656,929 B2 2/2014 Miller et al.
8,657,174 B2 2/2014 Yates et al.
8,657,175 B2 2/2014 Sonnenschein et al.
8,657,176 B2 2/2014 Shelton, IV et al.
8,657,177 B2 2/2014 Scirica et al.
8,657,178 B2 2/2014 Hueil et al.
8,657,482 B2 2/2014 Malackowski et al.
8,657,808 B2 2/2014 McPherson et al.
8,657,814 B2 2/2014 Werneth et al.
8,657,821 B2 2/2014 Palermo
D701,238 S 3/2014 Lai et al.
8,662,370 B2 3/2014 Takei
8,663,106 B2 3/2014 Stivoric et al.
8,663,192 B2 3/2014 Hester et al.
8,663,245 B2 3/2014 Francischelli et al.
8,663,262 B2 3/2014 Smith et al.
8,663,270 B2 3/2014 Donnigan et al.
8,664,792 B2 3/2014 Rebsdorf
8,668,129 B2 3/2014 Olson
8,668,130 B2 3/2014 Hess et al.
8,672,206 B2 3/2014 Aranyi et al.
8,672,207 B2 3/2014 Shelton, IV et al.
8,672,208 B2 3/2014 Hess et al.
8,672,209 B2 3/2014 Crainich
8,672,922 B2 3/2014 Loh et al.
8,672,935 B2 3/2014 Okada et al.
8,672,951 B2 3/2014 Smith et al.
8,673,210 B2 3/2014 Deshays
8,675,820 B2 3/2014 Baic et al.
8,678,263 B2 3/2014 Viola
8,678,994 B2 3/2014 Sonnenschein et al.
8,679,093 B2 3/2014 Farra
8,679,098 B2 3/2014 Hart
8,679,137 B2 3/2014 Bauman et al.
8,679,154 B2 3/2014 Smith et al.
8,679,156 B2 3/2014 Smith et al.
8,679,454 B2 3/2014 Guire et al.
8,684,248 B2 4/2014 Milliman
8,684,249 B2 4/2014 Racenet et al.
8,684,250 B2 4/2014 Bettuchi et al.
8,684,253 B2 4/2014 Giordano et al.
8,684,962 B2 4/2014 Kirschenman et al.
8,685,004 B2 4/2014 Zemlock et al.
8,685,020 B2 4/2014 Weizman et al.
8,690,893 B2 4/2014 Deitch et al.
8,695,866 B2 4/2014 Leimbach et al.
8,696,665 B2 4/2014 Hunt et al.
8,701,958 B2 4/2014 Shelton, IV et al.
8,701,959 B2 4/2014 Shah
8,706,316 B1 4/2014 Hoevenaar
8,708,210 B2 4/2014 Zemlok et al.
8,708,211 B2 4/2014 Zemlok et al.
8,708,212 B2 4/2014 Williams
8,708,213 B2 4/2014 Shelton, IV et al.
8,709,012 B2 4/2014 Muller
8,714,352 B2 5/2014 Farascioni et al.
8,714,429 B2 5/2014 Demmy
8,714,430 B2 5/2014 Natarajan et al.
8,715,256 B2 5/2014 Greener
8,715,302 B2 5/2014 Ibrahim et al.
8,720,766 B2 5/2014 Hess et al.
8,721,630 B2 5/2014 Ortiz et al.
8,721,666 B2 5/2014 Schroeder et al.
8,727,197 B2 5/2014 Hess et al.
8,727,199 B2 5/2014 Wenchell
8,727,200 B2 5/2014 Roy
8,727,961 B2 5/2014 Ziv
8,728,099 B2 5/2014 Cohn et al.
8,728,119 B2 5/2014 Cummins
8,733,470 B2 5/2014 Matthias et al.
8,733,611 B2 5/2014 Milliman
8,733,612 B2 5/2014 Ma
8,733,613 B2 5/2014 Huitema et al.
8,733,614 B2 5/2014 Ross et al.
8,734,336 B2 5/2014 Bonadio et al.
8,734,359 B2 5/2014 Ibanez et al.
8,734,478 B2 5/2014 Widenhouse et al.
8,734,831 B2 5/2014 Kim et al.
8,739,033 B2 5/2014 Rosenberg
8,739,417 B2 6/2014 Tokunaga et al.
8,740,034 B2 6/2014 Morgan et al.
8,740,037 B2 6/2014 Shelton, IV et al.
8,740,038 B2 6/2014 Shelton, IV et al.
8,740,987 B2 6/2014 Geremakis et al.
8,746,529 B2 6/2014 Shelton, IV et al.
8,746,530 B2 6/2014 Giordano et al.
8,746,533 B2 6/2014 Whitman et al.
8,746,535 B2 6/2014 Shelton, IV et al.
8,747,238 B2 6/2014 Shelton, IV et al.
8,747,441 B2 6/2014 Konieczynski et al.
8,752,264 B2 6/2014 Ackley et al.
8,752,699 B2 6/2014 Morgan et al.
8,752,747 B2 6/2014 Shelton, IV et al.
8,752,748 B2 6/2014 Whitman et al.
8,752,749 B2 6/2014 Moore et al.
8,753,664 B2 6/2014 Dao et al.
8,757,287 B2 6/2014 Mak et al.
8,757,465 B2 6/2014 Woodard, Jr. et al.
8,758,235 B2 6/2014 Jaworek
8,758,366 B2 6/2014 McLean et al.
8,758,391 B2 6/2014 Swayze et al.
8,758,438 B2 6/2014 Boyce et al.
8,763,875 B2 7/2014 Morgan et al.
8,763,876 B2 7/2014 Kostrzewski
8,763,877 B2 7/2014 Schall et al.
8,763,879 B2 7/2014 Shelton, IV et al.
8,764,732 B2 7/2014 Hartwell
8,765,942 B2 7/2014 Feraud et al.
8,770,458 B2 7/2014 Scirica
8,770,459 B2 7/2014 Racenet et al.
8,770,460 B2 7/2014 Belzer
8,771,169 B2 7/2014 Whitman et al.
8,771,260 B2 7/2014 Conlon et al.
8,777,004 B2 7/2014 Shelton, IV et al.
8,777,082 B2 7/2014 Scirica
8,777,083 B2 7/2014 Racenet et al.

(56) **References Cited**

U.S. PATENT DOCUMENTS

8,777,898 B2 7/2014 Suon et al.
8,783,541 B2 7/2014 Shelton, IV et al.
8,783,542 B2 7/2014 Riestenberg et al.
8,783,543 B2 7/2014 Shelton, IV et al.
8,784,304 B2 7/2014 Mikkaichi et al.
8,784,404 B2 7/2014 Doyle et al.
8,784,415 B2 7/2014 Malackowski et al.
8,789,737 B2 7/2014 Hodgkinson et al.
8,789,739 B2 7/2014 Swensgard
8,789,740 B2 7/2014 Baxter, III et al.
8,789,741 B2 7/2014 Baxter, III et al.
8,790,658 B2 7/2014 Cigarini et al.
8,790,684 B2 7/2014 Dave et al.
D711,905 S 8/2014 Morrison et al.
8,794,496 B2 8/2014 Scirica
8,794,497 B2 8/2014 Zingman
8,795,159 B2 8/2014 Moriyama
8,795,276 B2 8/2014 Dietz et al.
8,795,308 B2 8/2014 Valin
8,795,324 B2 8/2014 Kawai et al.
8,796,995 B2 8/2014 Cunanan et al.
8,800,681 B2 8/2014 Rousson et al.
8,800,837 B2 8/2014 Zemlok
8,800,838 B2 8/2014 Shelton, IV
8,800,839 B2 8/2014 Beetel
8,800,840 B2 8/2014 Jankowski
8,800,841 B2 8/2014 Ellerhorst et al.
8,801,710 B2 8/2014 Ullrich et al.
8,801,734 B2 8/2014 Shelton, IV et al.
8,801,735 B2 8/2014 Shelton, IV et al.
8,801,752 B2 8/2014 Fortier et al.
8,801,801 B2 8/2014 Datta et al.
8,806,973 B2 8/2014 Ross et al.
8,807,414 B2 8/2014 Ross et al.
8,808,161 B2 8/2014 Gregg et al.
8,808,164 B2 8/2014 Hoffman et al.
8,808,274 B2 8/2014 Hartwell
8,808,294 B2 8/2014 Fox et al.
8,808,308 B2 8/2014 Boukhny et al.
8,808,311 B2 8/2014 Heinrich et al.
8,808,325 B2 8/2014 Hess et al.
8,810,197 B2 8/2014 Juergens
8,811,017 B2 8/2014 Fujii et al.
8,813,866 B2 8/2014 Suzuki
8,814,024 B2 8/2014 Woodard, Jr. et al.
8,814,025 B2 8/2014 Miller et al.
8,814,836 B2 8/2014 Ignon et al.
8,815,594 B2 8/2014 Harris et al.
8,818,523 B2 8/2014 Olson et al.
8,820,603 B2 9/2014 Shelton, IV et al.
8,820,605 B2 9/2014 Shelton, IV
8,820,606 B2 9/2014 Hodgkinson
8,820,607 B2 9/2014 Marczyk
8,820,608 B2 9/2014 Miyamoto
8,821,514 B2 9/2014 Aranyi
8,822,934 B2 9/2014 Sayeh et al.
8,825,164 B2 9/2014 Tweden et al.
8,827,133 B2 9/2014 Shelton, IV et al.
8,827,134 B2 9/2014 Viola et al.
8,827,903 B2 9/2014 Shelton, IV et al.
8,828,046 B2 9/2014 Stefanchik et al.
8,831,779 B2 9/2014 Ortmaier et al.
8,833,219 B2 9/2014 Pierce
8,833,630 B2 9/2014 Milliman
8,833,632 B2 9/2014 Swensgard
8,834,353 B2 9/2014 Dejima et al.
8,834,465 B2 9/2014 Ramstein et al.
8,834,498 B2 9/2014 Byrum et al.
8,834,518 B2 9/2014 Faller et al.
8,840,003 B2 9/2014 Morgan et al.
8,840,004 B2 9/2014 Holsten et al.
8,840,603 B2 9/2014 Shelton, IV et al.
8,840,609 B2 9/2014 Stuebe
8,840,876 B2 9/2014 Eemeta et al.
8,844,789 B2 9/2014 Shelton, IV et al.
8,844,790 B2 9/2014 Demmy et al.
8,845,622 B2 9/2014 Paik et al.
8,851,215 B2 10/2014 Goto
8,851,354 B2 10/2014 Swensgard et al.
8,851,355 B2 10/2014 Aranyi et al.
8,852,174 B2 10/2014 Burbank
8,852,185 B2 10/2014 Twomey
8,852,199 B2 10/2014 Deslauriers et al.
8,852,218 B2 10/2014 Hughett, Sr. et al.
8,855,822 B2 10/2014 Bartol et al.
8,857,693 B2 10/2014 Schuckmann et al.
8,857,694 B2 10/2014 Shelton, IV et al.
8,858,538 B2 10/2014 Belson et al.
8,858,547 B2 10/2014 Brogna
8,858,571 B2 10/2014 Shelton, IV et al.
8,858,590 B2 10/2014 Shelton, IV et al.
8,864,007 B2 10/2014 Widenhouse et al.
8,864,009 B2 10/2014 Shelton, IV et al.
8,864,010 B2 10/2014 Williams
8,864,750 B2 10/2014 Ross et al.
8,869,912 B2 10/2014 Roßkamp et al.
8,869,913 B2 10/2014 Matthias et al.
8,870,049 B2 10/2014 Amid et al.
8,870,050 B2 10/2014 Hodgkinson
8,870,867 B2 10/2014 Walberg et al.
8,870,912 B2 10/2014 Brisson et al.
8,871,829 B2 10/2014 Gerold et al.
8,875,971 B2 11/2014 Hall et al.
8,875,972 B2 11/2014 Weisenburgh, II et al.
8,876,698 B2 11/2014 Sakamoto et al.
8,876,857 B2 11/2014 Burbank
8,876,858 B2 11/2014 Braun
8,882,660 B2 11/2014 Phee et al.
8,882,792 B2 11/2014 Dietz et al.
8,884,560 B2 11/2014 Ito
8,887,979 B2 11/2014 Mastri et al.
8,888,688 B2 11/2014 Julian et al.
8,888,695 B2 11/2014 Piskun et al.
8,888,792 B2 11/2014 Harris et al.
8,888,809 B2 11/2014 Davison et al.
8,893,946 B2 11/2014 Boudreaux et al.
8,893,949 B2 * 11/2014 Shelton, IV A61B 17 064 227 176.1
8,894,647 B2 11/2014 Beardsley et al.
8,894,654 B2 11/2014 Anderson
8,899,460 B2 12/2014 Wojcicki
8,899,461 B2 12/2014 Farascioni
8,899,462 B2 12/2014 Kostrzewski et al.
8,899,463 B2 12/2014 Schall et al.
8,899,464 B2 12/2014 Hueil et al.
8,899,465 B2 12/2014 Shelton, IV et al.
8,899,466 B2 12/2014 Baxter, III et al.
8,900,267 B2 12/2014 Woolfson et al.
8,905,287 B2 12/2014 Racenet et al.
8,905,977 B2 12/2014 Shelton et al.
8,910,846 B2 12/2014 Viola
8,910,847 B2 12/2014 Nalagatla et al.
8,911,426 B2 12/2014 Coppeta et al.
8,911,448 B2 12/2014 Stein
8,911,460 B2 12/2014 Neurohr et al.
8,911,471 B2 12/2014 Spivey et al.
8,912,746 B2 12/2014 Reid et al.
8,915,842 B2 12/2014 Weisenburgh, II et al.
8,920,368 B2 12/2014 Sandhu et al.
8,920,433 B2 12/2014 Barrier et al.
8,920,435 B2 12/2014 Smith et al.
8,920,438 B2 12/2014 Aranyi et al.
8,920,443 B2 12/2014 Hiles et al.
8,920,444 B2 12/2014 Hiles et al.
8,922,163 B2 12/2014 Macdonald
8,925,782 B2 1/2015 Shelton, IV
8,925,783 B2 1/2015 Zemlok et al.
8,925,788 B2 1/2015 Hess et al.
8,926,506 B2 1/2015 Widenhouse et al.
8,926,598 B2 1/2015 Mollere et al.
8,931,576 B2 1/2015 Iwata
8,931,679 B2 1/2015 Kostrzewski
8,931,680 B2 1/2015 Milliman
8,931,682 B2 1/2015 Timm et al.

(56) **References Cited**

U.S. PATENT DOCUMENTS

8,931,692 B2 1/2015 Sancak
8,936,614 B2 1/2015 Allen, IV
8,937,408 B2 1/2015 Ganem et al.
8,939,343 B2 1/2015 Milliman et al.
8,939,344 B2 1/2015 Olson et al.
8,939,898 B2 1/2015 Omoto
8,944,069 B2 2/2015 Miller et al.
8,945,095 B2 2/2015 Blumenkranz et al.
8,945,098 B2 2/2015 Seibold et al.
8,945,163 B2 2/2015 Voegele et al.
8,955,732 B2 2/2015 Zemlok et al.
8,956,342 B1 2/2015 Russo et al.
8,956,390 B2 2/2015 Shah et al.
8,958,860 B2 2/2015 Banerjee et al.
8,960,519 B2 2/2015 Whitman et al.
8,960,520 B2 2/2015 McCuen
8,960,521 B2 2/2015 Kostrzewski
8,961,191 B2 2/2015 Hanshew
8,961,504 B2 2/2015 Hoarau et al.
8,961,542 B2 2/2015 Whitfield et al.
8,963,714 B2 2/2015 Medhal et al.
D725,674 S 3/2015 Jung et al.
8,967,443 B2 3/2015 McCuen
8,967,444 B2 3/2015 Beetel
8,967,446 B2 3/2015 Beardsley et al.
8,967,448 B2 3/2015 Carter et al.
8,968,276 B2 3/2015 Zemlok et al.
8,968,308 B2 3/2015 Horner et al.
8,968,312 B2 3/2015 Marczyk et al.
8,968,337 B2 3/2015 Whitfield et al.
8,968,340 B2 3/2015 Chowaniec et al.
8,968,355 B2 3/2015 Malkowski et al.
8,968,358 B2 3/2015 Reschke
8,970,507 B2 3/2015 Holbein et al.
8,973,803 B2 3/2015 Hall et al.
8,973,804 B2 3/2015 Hess et al.
8,973,805 B2 3/2015 Scirica et al.
8,974,440 B2 3/2015 Farritor et al.
8,974,542 B2 3/2015 Fujimoto et al.
8,974,932 B2 3/2015 McGahan et al.
8,978,954 B2 3/2015 Shelton, IV et al.
8,978,955 B2 3/2015 Aronhalt et al.
8,978,956 B2 3/2015 Schall et al.
8,979,843 B2 3/2015 Timm et al.
8,979,890 B2 3/2015 Boudreaux
8,982,195 B2 3/2015 Claus et al.
8,984,711 B2 3/2015 Ota et al.
8,985,240 B2 3/2015 Winnard
8,985,429 B2 3/2015 Balek et al.
8,986,302 B2 3/2015 Aldridge et al.
8,989,903 B2 3/2015 Weir et al.
8,991,676 B2 3/2015 Hess et al.
8,991,677 B2 3/2015 Moore et al.
8,991,678 B2 3/2015 Wellman et al.
8,992,042 B2 3/2015 Eichenholz
8,992,422 B2 3/2015 Spivey et al.
8,992,565 B2 3/2015 Brisson et al.
8,996,165 B2 3/2015 Wang et al.
8,998,058 B2 4/2015 Moore et al.
8,998,059 B2 4/2015 Smith et al.
8,998,060 B2 4/2015 Bruewer et al.
8,998,061 B2 4/2015 Williams et al.
8,998,939 B2 4/2015 Price et al.
9,000,720 B2 4/2015 Stulen et al.
9,002,518 B2 4/2015 Manzo et al.
9,004,339 B1 4/2015 Park
9,004,799 B1 4/2015 Tibbits
9,005,230 B2 4/2015 Yates et al.
9,005,238 B2 4/2015 DeSantis et al.
9,005,243 B2 4/2015 Stopek et al.
9,010,606 B2 4/2015 Aranyi et al.
9,010,608 B2 4/2015 Casasanta, Jr. et al.
9,010,611 B2 4/2015 Ross et al.
9,011,437 B2 4/2015 Woodruff et al.
9,011,439 B2 4/2015 Shalaby et al.
9,011,471 B2 4/2015 Timm et al.
9,014,856 B2 4/2015 Manzo et al.
9,016,539 B2 4/2015 Kostrzewski et al.
9,016,540 B2 4/2015 Whitman et al.
9,016,541 B2 4/2015 Viola et al.
9,016,542 B2 4/2015 Shelton, IV et al.
9,016,545 B2 4/2015 Aranyi et al.
9,017,331 B2 4/2015 Fox
9,017,355 B2 4/2015 Smith et al.
9,017,369 B2 4/2015 Renger et al.
9,017,371 B2 4/2015 Whitman et al.
9,017,849 B2 4/2015 Stulen et al.
9,017,851 B2 4/2015 Felder et al.
D729,274 S 5/2015 Clement et al.
9,021,684 B2 5/2015 Lenker et al.
9,023,014 B2 5/2015 Chowaniec et al.
9,023,069 B2 5/2015 Kasvikis et al.
9,023,071 B2 5/2015 Miller et al.
9,026,347 B2 5/2015 Gadh et al.
9,027,817 B2 5/2015 Milliman et al.
9,028,468 B2 5/2015 Scarfogliero et al.
9,028,494 B2 5/2015 Shelton, IV et al.
9,028,495 B2 5/2015 Mueller et al.
9,028,510 B2 5/2015 Miyamoto et al.
9,028,511 B2 5/2015 Weller et al.
9,028,519 B2 5/2015 Yates et al.
9,028,529 B2 5/2015 Fox et al.
9,030,166 B2 5/2015 Kano
9,030,169 B2 5/2015 Christensen et al.
9,033,203 B2 5/2015 Woodard, Jr. et al.
9,033,204 B2 5/2015 Shelton, IV et al.
9,034,505 B2 5/2015 Detry et al.
9,038,881 B1 5/2015 Schaller et al.
9,039,690 B2 5/2015 Kersten et al.
9,039,694 B2 5/2015 Ross et al.
9,039,720 B2 5/2015 Madan
9,039,736 B2 5/2015 Scirica et al.
9,040,062 B2 5/2015 Maeda et al.
9,043,027 B2 5/2015 Durant et al.
9,044,227 B2 6/2015 Shelton, IV et al.
9,044,228 B2 6/2015 Woodard, Jr. et al.
9,044,229 B2 6/2015 Scheib et al.
9,044,230 B2 6/2015 Morgan et al.
9,044,238 B2 6/2015 Orszulak
9,044,241 B2 6/2015 Barner et al.
9,044,261 B2 6/2015 Houser
9,044,281 B2 6/2015 Pool et al.
9,050,083 B2 6/2015 Yates et al.
9,050,084 B2 6/2015 Schmid et al.
9,050,089 B2 6/2015 Orszulak
9,050,100 B2 6/2015 Yates et al.
9,050,120 B2 6/2015 Swarup et al.
9,050,123 B2 6/2015 Krause et al.
9,050,176 B2 6/2015 Datta et al.
9,050,192 B2 6/2015 Mansmann
9,055,941 B2 6/2015 Schmid et al.
9,055,942 B2 6/2015 Balbierz et al.
9,055,943 B2 6/2015 Zemlok et al.
9,055,944 B2 6/2015 Hodgkinson et al.
9,055,961 B2 6/2015 Manzo et al.
9,060,770 B2 6/2015 Shelton, IV et al.
9,060,776 B2 6/2015 Yates et al.
9,060,794 B2 6/2015 Kang et al.
9,060,894 B2 6/2015 Wubbeling
9,061,392 B2 6/2015 Forgues et al.
9,070,068 B2 6/2015 Coveley et al.
9,072,515 B2 7/2015 Hall et al.
9,072,523 B2 7/2015 Houser et al.
9,072,535 B2 7/2015 Shelton, IV et al.
9,072,536 B2 7/2015 Shelton, IV et al.
9,078,653 B2 7/2015 Leimbach et al.
9,078,654 B2 7/2015 Whitman et al.
9,084,586 B2 7/2015 Hafner et al.
9,084,601 B2 7/2015 Moore et al.
9,084,602 B2 7/2015 Gleiman
9,086,875 B2 7/2015 Harrat et al.
9,089,326 B2 7/2015 Krumanaker et al.
9,089,330 B2 7/2015 Widenhouse et al.
9,089,338 B2 7/2015 Smith et al.

(56) **References Cited**

U.S. PATENT DOCUMENTS

9,089,352 B2 7/2015 Jeong
9,089,360 B2 7/2015 Messerly et al.
9,091,588 B2 7/2015 Lefler
D736,792 S 8/2015 Brinda et al.
9,095,339 B2 8/2015 Moore et al.
9,095,346 B2 8/2015 Houser et al.
9,095,362 B2 8/2015 Dachs, II et al.
9,095,367 B2 8/2015 Olson et al.
9,095,642 B2 8/2015 Harder et al.
9,096,033 B2 8/2015 Holop et al.
9,098,153 B2 8/2015 Shen et al.
9,099,863 B2 8/2015 Smith et al.
9,099,877 B2 8/2015 Banos et al.
9,099,922 B2 8/2015 Toosky et al.
9,101,358 B2 8/2015 Kerr et al.
9,101,359 B2 8/2015 Smith et al.
9,101,385 B2 8/2015 Shelton, IV et al.
9,101,475 B2 8/2015 Wei et al.
9,101,621 B2 8/2015 Zeldis
9,107,663 B2 8/2015 Swensgard
9,107,667 B2 8/2015 Hodgkinson
9,107,690 B2 8/2015 Bales, Jr. et al.
9,110,587 B2 8/2015 Kim et al.
9,113,862 B2 8/2015 Morgan et al.
9,113,864 B2 8/2015 Morgan et al.
9,113,865 B2 8/2015 Shelton, IV et al.
9,113,866 B2 8/2015 Felder et al.
9,113,868 B2 8/2015 Felder et al.
9,113,873 B2 8/2015 Marczyk et al.
9,113,874 B2 8/2015 Shelton, IV et al.
9,113,875 B2 8/2015 Viola et al.
9,113,876 B2 8/2015 Zemlok et al.
9,113,879 B2 8/2015 Felder et al.
9,113,880 B2 8/2015 Zemlok et al.
9,113,881 B2 8/2015 Scirica
9,113,883 B2 8/2015 Aronhalt et al.
9,113,884 B2 8/2015 Shelton, IV et al.
9,113,887 B2 8/2015 Behnke, II et al.
9,119,615 B2 9/2015 Felder et al.
9,119,657 B2 9/2015 Shelton, IV et al.
9,119,898 B2 9/2015 Bayon et al.
9,119,957 B2 9/2015 Gantz et al.
9,123,286 B2 9/2015 Park
9,124,097 B2 9/2015 Cruz
9,125,651 B2 9/2015 Mandakolathur Vasudevan et al.
9,125,654 B2 9/2015 Aronhalt et al.
9,125,662 B2 9/2015 Shelton, IV
9,126,317 B2 9/2015 Lawton et al.
9,131,835 B2 9/2015 Widenhouse et al.
9,131,940 B2 9/2015 Huitema et al.
9,131,950 B2 9/2015 Matthew
9,131,957 B2 9/2015 Skarbnik et al.
9,138,225 B2 9/2015 Huang et al.
9,138,226 B2 9/2015 Racenet et al.
9,144,455 B2 9/2015 Kennedy et al.
D740,414 S 10/2015 Katsura
D741,882 S 10/2015 Shmilov et al.
9,149,274 B2 10/2015 Spivey et al.
9,149,324 B2 10/2015 Huang et al.
9,149,325 B2 10/2015 Worrell et al.
9,153,994 B2 10/2015 Wood et al.
9,154,189 B2 10/2015 Von Novak et al.
9,161,753 B2 10/2015 Prior
9,161,769 B2 10/2015 Stoddard et al.
9,161,803 B2 10 2015 Yates et al.
9,161,807 B2 10/2015 Garrison
9,161,855 B2 10/2015 Rousseau et al.
9,164,271 B2 10/2015 Ebata et al.
9,167,960 B2 10/2015 Yamaguchi et al.
9,168,038 B2 10/2015 Shelton, IV et al.
9,168,039 B1 10/2015 Knodel
9,168,042 B2 10/2015 Milliman
9,168,054 B2 10/2015 Turner et al.
9,168,144 B2 10/2015 Rivin et al.
9,171,244 B2 10/2015 Endou et al.
9,179,832 B2 11/2015 Diolaiti
9,179,911 B2 11/2015 Morgan et al.
9,179,912 B2 11/2015 Yates et al.
9,180,223 B2 11/2015 Yu et al.
9,182,244 B2 11/2015 Luke et al.
9,186,046 B2 11/2015 Ramamurthy et al.
9,186,137 B2 11/2015 Farascioni et al.
9,186,140 B2 11/2015 Hiles et al.
9,186,142 B2 11/2015 Fanelli et al.
9,186,143 B2 11/2015 Timm et al.
9,186,148 B2 11/2015 Felder et al.
9,186,221 B2 11/2015 Burbank
9,192,376 B2 11/2015 Almodovar
9,192,380 B2 11/2015 (Tarinelli) Racenet et al.
9,192,384 B2 11/2015 Bettuchi
9,192,430 B2 11/2015 Rachlin et al.
9,192,434 B2 11/2015 Twomey et al.
9,193,045 B2 11/2015 Saur et al.
9,197,079 B2 11/2015 Yip et al.
D744,528 S 12/2015 Agrawal
D746,459 S 12/2015 Kaercher et al.
9,198,642 B2 12/2015 Storz
9,198,644 B2 12/2015 Balek et al.
9,198,661 B2 12/2015 Swensgard
9,198,662 B2 12/2015 Barton et al.
9,198,683 B2 12/2015 Friedman et al.
9,204,830 B2 12/2015 Zand et al.
9,204,877 B2 12/2015 Whitman et al.
9,204,878 B2 12/2015 Hall et al.
9,204,879 B2 12/2015 Shelton, IV
9,204,880 B2 12/2015 Baxter, III et al.
9,204,881 B2 12/2015 Penna
9,204,923 B2 12/2015 Manzo et al.
9,204,924 B2 12/2015 Marczyk et al.
9,211,120 B2 12/2015 Scheib et al.
9,211,121 B2 12/2015 Hall et al.
9,211,122 B2 12/2015 Hagerty et al.
9,216,013 B2 12/2015 Scirica et al.
9,216,019 B2 12/2015 Schmid et al.
9,216,020 B2 12/2015 Zhang et al.
9,216,030 B2 12/2015 Fan et al.
9,216,062 B2 12/2015 Duque et al.
9,220,500 B2 12/2015 Swayze et al.
9,220,501 B2 12/2015 Baxter, III et al.
9,220,502 B2 12/2015 Zemlok et al.
9,220,504 B2 12/2015 Viola et al.
9,220,508 B2 12/2015 Dannaher
9,220,559 B2 12/2015 Worrell et al.
9,220,570 B2 12/2015 Kim et al.
D746,854 S 1/2016 Shardlow et al.
9,226,686 B2 1/2016 Blair
9,226,750 B2 1/2016 Weir et al.
9,226,751 B2 1/2016 Shelton, IV et al.
9,226,754 B2 1/2016 D'Agostino et al.
9,226,760 B2 1/2016 Shelton, IV
9,226,761 B2 1/2016 Burbank
9,226,767 B2 1/2016 Stulen et al.
9,226,799 B2 1/2016 Lightcap et al.
9,232,941 B2 1/2016 Mandakolathur Vasudevan et al.
9,232,945 B2 1/2016 Zingman
9,232,979 B2 1/2016 Parihar et al.
9,233,610 B2 1/2016 Kim et al.
9,237,891 B2 1/2016 Shelton, IV
9,237,892 B2 1/2016 Hodgkinson
9,237,895 B2 1/2016 McCarthy et al.
9,237,900 B2 1/2016 Boudreaux et al.
9,237,921 B2 1/2016 Messerly et al.
9,239,064 B2 1/2016 Helbig et al.
9,240,740 B2 1/2016 Zeng et al.
9,241,711 B2 1/2016 Ivanko
9,241,712 B2 1/2016 Zemlok et al.
9,241,714 B2 1/2016 Timm et al.
9,241,716 B2 1/2016 Whitman
9,241,731 B2 1/2016 Boudreaux et al.
9,241,758 B2 1/2016 Franer et al.
9,244,524 B2 1/2016 Inoue et al.
D748,668 S 2/2016 Kim et al.
D749,128 S 2/2016 Perez et al.
D749,623 S 2/2016 Gray et al.

(56) **References Cited**

U.S. PATENT DOCUMENTS

D750,122 S 2/2016 Shardlow et al.
D750,129 S 2/2016 Kwon
9,254,131 B2 2/2016 Soltz et al.
9,254,170 B2 2/2016 Parihar et al.
9,259,265 B2 2/2016 Harris et al.
9,259,268 B2 2/2016 Behnke, II et al.
9,259,274 B2 2/2016 Prisco
9,259,275 B2 2/2016 Burbank
9,261,172 B2 2/2016 Solomon et al.
9,265,500 B2 2/2016 Sorrentino et al.
9,265,510 B2 2/2016 Dietzel et al.
9,265,516 B2 2/2016 Casey et al.
9,265,585 B2 2/2016 Wingardner et al.
9,271,718 B2 3/2016 Milad et al.
9,271,727 B2 3/2016 McGuckin, Jr. et al.
9,271,753 B2 3/2016 Butler et al.
9,271,799 B2 3/2016 Shelton, IV et al.
9,272,406 B2 3/2016 Aronhalt et al.
9,274,095 B2 3/2016 Humayun et al.
9,277,919 B2 3/2016 Timmer et al.
9,277,922 B2 3/2016 Carter et al.
9,277,969 B2 3/2016 Brannan et al.
9,282,962 B2 3/2016 Schmid et al.
9,282,963 B2 3/2016 Bryant
9,282,966 B2 3/2016 Shelton, IV et al.
9,282,974 B2 3/2016 Shelton, IV
9,283,028 B2 3/2016 Johnson
9,283,045 B2 3/2016 Rhee et al.
9,283,054 B2 3/2016 Morgan et al.
9,283,334 B2 3/2016 Mantell et al.
9,289,206 B2 3/2016 Hess et al.
9,289,207 B2 3/2016 Shelton, IV
9,289,210 B2 3/2016 Baxter, III et al.
9,289,211 B2 3/2016 Williams et al.
9,289,212 B2 3/2016 Shelton, IV et al.
9,289,225 B2 3/2016 Shelton, IV et al.
9,289,256 B2 3/2016 Shelton, IV et al.
9,293,757 B2 3/2016 Toussaint et al.
9,295,464 B2 3/2016 Shelton, IV et al.
9,295,465 B2 3/2016 Farascioni
9,295,466 B2 3/2016 Hodgkinson et al.
9,295,467 B2 3/2016 Scirica
9,295,468 B2 3/2016 Heinrich et al.
9,295,514 B2 3/2016 Shelton, IV et al.
9,295,522 B2 3/2016 Kostrzewski
9,295,565 B2 3/2016 McLean
9,295,784 B2 3/2016 Eggert et al.
D753,167 S 4/2016 Yu et al.
9,301,691 B2 4/2016 Hufnagel et al.
9,301,752 B2 4/2016 Mandakolathur Vasudevan et al.
9,301,753 B2 4/2016 Aldridge et al.
9,301,755 B2 4/2016 Shelton, IV et al.
9,301,759 B2 4/2016 Spivey et al.
9,301,811 B2 4/2016 Goldberg et al.
9,307,965 B2 4/2016 Ming et al.
9,307,986 B2 4/2016 Hall et al.
9,307,987 B2 4/2016 Swensgard et al.
9,307,988 B2 4/2016 Shelton, IV
9,307,989 B2 4/2016 Shelton, IV et al.
9,307,994 B2 4/2016 Gresham et al.
9,308,009 B2 4/2016 Madan et al.
9,308,011 B2 4/2016 Chao et al.
9,308,646 B2 4/2016 Lim et al.
9,313,915 B2 4/2016 Niu et al.
9,314,246 B2 4/2016 Shelton, IV et al.
9,314,247 B2 4/2016 Shelton, IV et al.
9,314,261 B2 4/2016 Bales, Jr. et al.
9,314,291 B2 4/2016 Schall et al.
9,314,339 B2 4/2016 Mansmann
9,314,908 B2 4/2016 Tanimoto et al.
9,320,518 B2 4/2016 Henderson et al.
9,320,520 B2 4/2016 Shelton, IV et al.
9,320,521 B2 4/2016 Shelton, IV et al.
9,320,523 B2 4/2016 Shelton, IV et al.
9,325,516 B2 4/2016 Pera et al.
D755,196 S 5/2016 Meyers et al.
D756,373 S 5/2016 Raskin et al.
D756,377 S 5/2016 Connolly et al.
D757,028 S 5/2016 Goldenberg et al.
9,326,767 B2 5/2016 Koch et al.
9,326,768 B2 5/2016 Shelton, IV
9,326,769 B2 5/2016 Shelton, IV et al.
9,326,770 B2 5/2016 Shelton, IV et al.
9,326,771 B2 5/2016 Baxter, III et al.
9,326,788 B2 5/2016 Batross et al.
9,326,812 B2 5/2016 Waaler et al.
9,326,824 B2 5/2016 Inoue et al.
9,327,061 B2 5/2016 Govil et al.
9,331,721 B2 5/2016 Martinez Nuevo et al.
9,332,890 B2 5/2016 Ozawa
9,332,974 B2 5/2016 Henderson et al.
9,332,984 B2 5/2016 Weaner et al.
9,332,987 B2 5/2016 Leimbach et al.
9,333,040 B2 5/2016 Shellenberger et al.
9,333,082 B2 5/2016 Wei et al.
9,337,668 B2 5/2016 Yip
9,339,226 B2 5/2016 van der Walt et al.
9,339,342 B2 5/2016 Prisco et al.
9,345,477 B2 5/2016 Anim et al.
9,345,479 B2 5/2016 (Tarinelli) Racenet et al.
9,345,480 B2 5/2016 Hessler et al.
9,345,481 B2 5/2016 Hall et al.
9,345,503 B2 5/2016 Ishida et al.
9,351,726 B2 5/2016 Leimbach et al.
9,351,727 B2 5/2016 Leimbach et al.
9,351,728 B2 5/2016 Sniffin et al.
9,351,730 B2 5/2016 Schmid et al.
9,351,731 B2 5/2016 Carter et al.
9,351,732 B2 5/2016 Hodgkinson
9,352,071 B2 5/2016 Landgrebe et al.
D758,433 S 6/2016 Lee et al.
D759,063 S 6/2016 Chen
9,358,003 B2 6/2016 Hall et al.
9,358,004 B2 6/2016 Sniffin et al.
9,358,005 B2 6/2016 Shelton, IV et al.
9,358,015 B2 6/2016 Sorrentino et al.
9,358,031 B2 6/2016 Manzo
9,358,065 B2 6/2016 Ladtkow et al.
9,364,217 B2 6/2016 Kostrzewski et al.
9,364,219 B2 6/2016 Olson et al.
9,364,220 B2 6/2016 Williams
9,364,223 B2 6/2016 Scirica
9,364,226 B2 6/2016 Zemlok et al.
9,364,228 B2 6/2016 Straehnz et al.
9,364,229 B2 6/2016 D'Agostino et al.
9,364,230 B2 6/2016 Shelton, IV et al.
9,364,231 B2 6/2016 Wenchell
9,364,233 B2 6/2016 Alexander, III et al.
9,364,279 B2 6/2016 Houser et al.
9,368,991 B2 6/2016 Qahouq
9,370,341 B2 6/2016 Ceniccola et al.
9,370,358 B2 6/2016 Shelton, IV et al.
9,370,361 B2 6/2016 Viola et al.
9,370,362 B2 6/2016 Petty et al.
9,370,364 B2 6/2016 Smith et al.
9,370,400 B2 6/2016 Parihar
9,375,206 B2 6/2016 Vidal et al.
9,375,218 B2 6/2016 Wheeler et al.
9,375,230 B2 6/2016 Ross et al.
9,375,232 B2 6/2016 Hunt et al.
9,375,255 B2 6/2016 Houser et al.
D761,309 S 7/2016 Lee et al.
9,381,058 B2 7/2016 Houser et al.
9,383,881 B2 7/2016 Day et al.
9,385,640 B2 7/2016 Sun et al.
9,386,983 B2 7/2016 Swensgard et al.
9,386,984 B2 7/2016 Aronhalt et al.
9,386,985 B2 7/2016 Koch, Jr. et al.
9,386,988 B2 7/2016 Baxter, III et al.
9,387,003 B2 7/2016 Kaercher et al.
9,392,885 B2 7/2016 Vogler et al.
9,393,015 B2 7/2016 Laurent et al.
9,393,017 B2 7/2016 Flanagan et al.
9,393,018 B2 7/2016 Wang et al.

(56) **References Cited**

U.S. PATENT DOCUMENTS

9,393,354 B2 7/2016 Freedman et al.
9,396,369 B1 7/2016 Whitehurst et al.
9,396,669 B2 7/2016 Karkanias et al.
9,398,905 B2 7/2016 Martin
9,398,911 B2 7/2016 Auld
D763,277 S 8/2016 Ahmed et al.
D764,498 S 8/2016 Capela et al.
9,402,604 B2 8/2016 Williams et al.
9,402,625 B2 8/2016 Coleman et al.
9,402,626 B2 8/2016 Ortiz et al.
9,402,627 B2 8/2016 Stevenson et al.
9,402,629 B2 8/2016 Ehrenfels et al.
9,402,679 B2 8/2016 Ginnebaugh et al.
9,402,682 B2 8/2016 Worrell et al.
9,402,688 B2 8/2016 Min et al.
9,408,604 B2 8/2016 Shelton, IV et al.
9,408,605 B1 8/2016 Knodel et al.
9,408,606 B2 8/2016 Shelton, IV
9,408,622 B2 8/2016 Stulen et al.
9,411,370 B2 8/2016 Benni et al.
9,413,128 B2 8/2016 Tien et al.
9,414,838 B2 8/2016 Shelton, IV et al.
9,414,849 B2 8/2016 Nagashimada
9,414,880 B2 8/2016 Monson et al.
9,420,967 B2 8/2016 Zand et al.
9,421,003 B2 8/2016 Williams et al.
9,421,014 B2 8/2016 Ingmanson et al.
9,421,030 B2 8/2016 Cole et al.
9,421,060 B2 8/2016 Monson et al.
9,421,062 B2 8/2016 Houser et al.
9,421,682 B2 8/2016 McClaskey et al.
9,427,223 B2 8/2016 Park et al.
9,427,231 B2 8/2016 Racenet et al.
9,429,204 B2 8/2016 Stefan et al.
D767,624 S 9/2016 Lee et al.
9,433,411 B2 9/2016 Racenet et al.
9,433,414 B2 9/2016 Chen et al.
9,433,419 B2 9/2016 Gonzalez et al.
9,433,420 B2 9/2016 Hodgkinson
9,439,649 B2 9/2016 Shelton, IV et al.
9,439,650 B2 9/2016 McGuckin, Jr. et al.
9,439,651 B2 9/2016 Smith et al.
9,439,668 B2 9/2016 Timm et al.
9,445,808 B2 9/2016 Woodard, Jr. et al.
9,445,813 B2 9/2016 Shelton, IV et al.
9,445,816 B2 9/2016 Swayze et al.
9,445,817 B2 9/2016 Bettuchi
9,446,226 B2 9/2016 Zilberman
9,451,938 B2 9/2016 Overes et al.
9,451,958 B2 9/2016 Shelton, IV et al.
9,452,020 B2 9/2016 Griffiths et al.
D768,152 S 10/2016 Gutierrez et al.
D768,156 S 10/2016 Frincke
D768,167 S 10/2016 Jones et al.
D769,315 S 10/2016 Scotti
D769,930 S 10/2016 Agrawal
9,461,340 B2 10/2016 Li et al.
9,463,012 B2 10/2016 Bonutti et al.
9,463,040 B2 10/2016 Jeong et al.
9,463,260 B2 10/2016 Stopek
9,468,438 B2 10/2016 Baber et al.
9,468,447 B2 10/2016 Aman et al.
9,470,297 B2 10/2016 Aranyi et al.
9,471,969 B2 10/2016 Zeng et al.
9,474,506 B2 10/2016 Magnin et al.
9,474,513 B2 10/2016 Ishida et al.
9,474,523 B2 10/2016 Meade et al.
9,474,540 B2 10/2016 Stokes et al.
9,475,180 B2 10/2016 Eshleman et al.
9,477,649 B1 10/2016 Davidson et al.
D770,476 S 11/2016 Jitkoff et al.
D770,515 S 11/2016 Cho et al.
D771,116 S 11/2016 Dellinger et al.
D772,905 S 11/2016 Ingenlath
9,480,476 B2 11/2016 Aldridge et al.
9,480,492 B2 11/2016 Aranyi et al.
9,483,095 B2 11/2016 Tran et al.
9,486,186 B2 11/2016 Fiebig et al.
9,486,213 B2 11/2016 Altman et al.
9,486,214 B2 11/2016 Shelton, IV
9,486,215 B2 11/2016 Olson et al.
9,486,302 B2 11/2016 Boey et al.
9,488,197 B2 11/2016 Wi
9,492,146 B2 11/2016 Kostrzewski et al.
9,492,167 B2 11/2016 Shelton, IV et al.
9,492,170 B2 11/2016 Bear et al.
9,492,172 B2 11/2016 Weisshaupt et al.
9,492,189 B2 11/2016 Williams et al.
9,492,192 B2 11/2016 To et al.
9,492,237 B2 11/2016 Kang et al.
9,498,213 B2 11/2016 Marczyk et al.
9,498,219 B2 11/2016 Moore et al.
9,498,231 B2 11/2016 Haider et al.
9,504,455 B2 11/2016 Whitman et al.
9,504,483 B2 11/2016 Houser et al.
9,504,520 B2 11/2016 Worrell et al.
9,504,521 B2 11/2016 Deutmeyer et al.
9,504,528 B2 11/2016 Ivinson et al.
9,507,399 B2 11/2016 Chien
D774,547 S 12/2016 Capela et al.
D775,336 S 12/2016 Shelton, IV et al.
9,510,827 B2 12/2016 Kostrzewski
9,510,828 B2 12/2016 Yates et al.
9,510,830 B2 12/2016 Shelton, IV et al.
9,510,846 B2 12/2016 Sholev et al.
9,510,895 B2 12/2016 Houser et al.
9,510,925 B2 12/2016 Hotter et al.
9,515,366 B2 12/2016 Herbsommer et al.
9,517,063 B2 12/2016 Swayze et al.
9,517,065 B2 12/2016 Simms et al.
9,517,068 B2 12/2016 Shelton, IV et al.
9,517,326 B2 12/2016 Hinman et al.
9,521,996 B2 12/2016 Armstrong
9,522,003 B2 12/2016 Weir et al.
9,522,005 B2 12/2016 Williams et al.
9,522,014 B2 12/2016 Nishizawa et al.
9,522,029 B2 12/2016 Yates et al.
9,526,481 B2 12/2016 Storz et al.
9,526,499 B2 12/2016 Kostrzewski et al.
9,526,563 B2 12/2016 Twomey
9,526,564 B2 12/2016 Rusin
9,526,921 B2 12/2016 Kimball et al.
D776,683 S 1/2017 Gobinski et al.
D777,773 S 1/2017 Shi
9,532,783 B2 1/2017 Swayze et al.
9,539,060 B2 1/2017 Lightcap et al.
9,539,726 B2 1/2017 Simaan et al.
9,545,253 B2 1/2017 Worrell et al.
9,545,258 B2 1/2017 Smith et al.
9,549,732 B2 1/2017 Yates et al.
9,549,733 B2 1/2017 Knodel
9,549,735 B2 1/2017 Shelton, IV et al.
9,549,750 B2 1/2017 Shelton, IV et al.
9,554,794 B2 1/2017 Baber et al.
9,554,796 B2 1/2017 Kostrzewski
9,554,803 B2 1/2017 Smith et al.
9,554,812 B2 1/2017 Lnkpen et al.
9,554,854 B2 1/2017 Yates et al.
9,559,624 B2 1/2017 Philipp
9,561,013 B2 2/2017 Tsuchiya
9,561,029 B2 2/2017 Scheib et al.
9,561,030 B2 2/2017 Zhang et al.
9,561,031 B2 2/2017 Heinrich et al.
9,561,032 B2 2/2017 Shelton, IV et al.
9,561,038 B2 2/2017 Shelton, IV et al.
9,561,045 B2 2/2017 Hinman et al.
9,561,072 B2 2/2017 Ko
9,561,082 B2 2/2017 Yen et al.
9,566,061 B2 2/2017 Aronhalt et al.
9,566,062 B2 2/2017 Boudreaux
9,566,064 B2 2/2017 Williams et al.
9,566,065 B2 2/2017 Knodel
9,566,067 B2 2/2017 Milliman et al.
9,572,552 B1 2/2017 Bodor et al.

(56) **References Cited**

U.S. PATENT DOCUMENTS

9,572,574 B2 2/2017 Shelton, IV et al.
9,572,576 B2 2/2017 Hodgkinson et al.
9,572,577 B2 2/2017 Lloyd et al.
9,572,592 B2 2/2017 Price et al.
9,574,644 B2 2/2017 Parihar
9,579,088 B2 2/2017 Farritor et al.
9,579,143 B2 2/2017 Ullrich et al.
9,579,158 B2 2/2017 Brianza et al.
D780,803 S 3/2017 Gill et al.
D781,879 S 3/2017 Butcher et al.
D782,530 S 3/2017 Paek et al.
9,585,550 B2 3/2017 Abel et al.
9,585,657 B2 3/2017 Shelton, IV et al.
9,585,658 B2 3/2017 Shelton, IV
9,585,659 B2 3/2017 Viola et al.
9,585,660 B2 3/2017 Laurent et al.
9,585,662 B2 3/2017 Shelton, IV et al.
9,585,663 B2 3/2017 Shelton, IV et al.
9,585,672 B2 3/2017 Bastia
9,590,433 B2 3/2017 Li
9,592,050 B2 3/2017 Schmid et al.
9,592,052 B2 3/2017 Shelton, IV
9,592,053 B2 3/2017 Shelton, IV et al.
9,592,054 B2 3/2017 Schmid et al.
9,597,073 B2 3/2017 Sorrentino et al.
9,597,075 B2 3/2017 Shelton, IV et al.
9,597,078 B2 3/2017 Scirica et al.
9,597,080 B2 3/2017 Milliman et al.
9,597,104 B2 3/2017 Nicholas et al.
9,597,143 B2 3/2017 Madan et al.
9,603,595 B2 3/2017 Shelton, IV et al.
9,603,598 B2 3/2017 Shelton, IV et al.
9,603,599 B2 3/2017 Miller et al.
9,603,991 B2 3/2017 Shelton, IV et al.
D783,658 S 4/2017 Hurst et al.
9,610,068 B2 4/2017 Kappel et al.
9,610,079 B2 4/2017 Kamei et al.
9,610,080 B2 4/2017 Whitfield et al.
9,610,412 B2 4/2017 Zemlok et al.
9,614,258 B2 4/2017 Takahashi et al.
9,615,826 B2 4/2017 Shelton, IV et al.
9,622,745 B2 4/2017 Ingmanson et al.
9,622,746 B2 4/2017 Simms et al.
9,629,623 B2 4/2017 Lytle, IV et al.
9,629,626 B2 4/2017 Soltz et al.
9,629,627 B2 4/2017 Kostrzewski et al.
9,629,628 B2 4/2017 Aranyi
9,629,629 B2 4/2017 Leimbach et al.
9,629,631 B2 4/2017 Nicholas et al.
9,629,632 B2 4/2017 Linder et al.
9,629,652 B2 4/2017 Mumaw et al.
9,629,814 B2 4/2017 Widenhouse et al.
D785,794 S 5/2017 Magno, Jr.
D786,280 S 5/2017 Ma
D786,896 S 5/2017 Kim et al.
D787,547 S 5/2017 Basargin et al.
D788,123 S 5/2017 Shan et al.
D788,140 S 5/2017 Hemsley et al.
9,636,091 B2 5/2017 Beardsley et al.
9,636,111 B2 5/2017 Wenchell
9,636,112 B2 5/2017 Penna et al.
9,636,113 B2 5/2017 Wenchell
9,636,850 B2 5/2017 Stopek et al.
9,641,122 B2 5/2017 Romanowich et al.
9,642,620 B2 5/2017 Baxter, III et al.
9,642,642 B2 5/2017 Lim
9,649,096 B2 5/2017 Sholev
9,649,110 B2 5/2017 Parihar et al.
9,649,111 B2 5/2017 Shelton, IV et al.
9,649,190 B2 5/2017 Mathies
9,651,032 B2 5/2017 Weaver et al.
9,655,613 B2 5/2017 Schaller
9,655,614 B2 5/2017 Swensgard et al.
9,655,615 B2 5/2017 Knodel et al.
9,655,616 B2 5/2017 Aranyi
9,655,624 B2 5/2017 Shelton, IV et al.
9,661,991 B2 5/2017 Glossop
9,662,108 B2 5/2017 Williams
9,662,110 B2 5/2017 Huang et al.
9,662,111 B2 5/2017 Holsten et al.
9,662,116 B2 5/2017 Smith et al.
9,662,130 B2 5/2017 Bartels et al.
9,662,131 B2 5/2017 Omori et al.
D788,792 S 6/2017 Alessandri et al.
D789,384 S 6/2017 Lin et al.
D790,570 S 6/2017 Butcher et al.
9,668,728 B2 6/2017 Williams et al.
9,668,729 B2 6/2017 Williams et al.
9,668,732 B2 6/2017 Patel et al.
9,668,733 B2 6/2017 Williams
9,668,734 B2 6/2017 Kostrzewski et al.
9,668,735 B2 6/2017 Beetel
9,675,344 B2 6/2017 Combrowski et al.
9,675,348 B2 6/2017 Smith et al.
9,675,351 B2 6/2017 Hodgkinson et al.
9,675,354 B2 6/2017 Weir et al.
9,675,355 B2 6/2017 Shelton, IV et al.
9,675,368 B2 6/2017 Guo et al.
9,675,372 B2 6/2017 Laurent et al.
9,675,375 B2 6/2017 Houser et al.
9,675,405 B2 6/2017 Trees et al.
9,675,819 B2 6/2017 Dunbar et al.
9,681,870 B2 6/2017 Baxter, III et al.
9,681,873 B2 6/2017 Smith et al.
9,681,884 B2 6/2017 Clem et al.
9,687,230 B2 6/2017 Leimbach et al.
9,687,231 B2 6/2017 Baxter, III et al.
9,687,232 B2 6/2017 Shelton, IV et al.
9,687,233 B2 6/2017 Fernandez et al.
9,687,236 B2 6/2017 Leimbach et al.
9,687,237 B2 6/2017 Schmid et al.
9,687,253 B2 6/2017 Detry et al.
9,689,466 B2 6/2017 Kanai et al.
9,690,362 B2 6/2017 Leimbach et al.
9,693,772 B2 7/2017 Ingmanson et al.
9,693,774 B2 7/2017 Gettinger et al.
9,693,775 B2 7/2017 Agarwal et al.
9,693,777 B2 7/2017 Schellin et al.
9,700,309 B2 7/2017 Jaworek et al.
9,700,310 B2 7/2017 Morgan et al.
9,700,312 B2 7/2017 Kostrzewski et al.
9,700,314 B2 7/2017 Marczyk
9,700,315 B2 7/2017 Chen et al.
9,700,317 B2 7/2017 Aronhalt et al.
9,700,318 B2 7/2017 Scirica et al.
9,700,319 B2 7/2017 Motooka et al.
9,700,320 B2 7/2017 Dinardo et al.
9,700,321 B2 7/2017 Shelton, IV et al.
9,700,334 B2 7/2017 Hinman et al.
9,700,381 B2 7/2017 Amat Girbau
9,702,823 B2 7/2017 Maher et al.
9,706,674 B2 7/2017 Collins et al.
9,706,981 B2 7/2017 Nicholas et al.
9,706,991 B2 7/2017 Hess et al.
9,706,993 B2 7/2017 Hessler et al.
9,707,003 B2 7/2017 Hoell, Jr. et al.
9,707,005 B2 7/2017 Strobl et al.
9,707,026 B2 7/2017 Malackowski et al.
9,707,033 B2 7/2017 Parihar et al.
9,707,043 B2 7/2017 Bozung
9,707,684 B2 7/2017 Ruiz Morales et al.
9,713,466 B2 7/2017 Kostrzewski
9,713,468 B2 7/2017 Harris et al.
9,713,470 B2 7/2017 Scirica et al.
9,713,474 B2 7/2017 Lorenz
D795,919 S 8/2017 Bischoff et al.
9,717,497 B2 8/2017 Zerkle et al.
9,717,498 B2 8/2017 Aranyi et al.
9,718,190 B2 8/2017 Larkin et al.
9,722,236 B2 8/2017 Sathrum
9,724,091 B2 8/2017 Shelton, IV et al.
9,724,092 B2 8/2017 Baxter, III et al.
9,724,094 B2 8/2017 Baber et al.
9,724,095 B2 8/2017 Gupta et al.

(56) **References Cited**

U.S. PATENT DOCUMENTS

9,724,096 B2 8/2017 Thompson et al.
9,724,098 B2 8/2017 Baxter, III et al.
9,724,118 B2 8/2017 Schulte et al.
9,724,163 B2 8/2017 Orban
9,730,692 B2 8/2017 Shelton, IV et al.
9,730,695 B2 8/2017 Leimbach et al.
9,730,697 B2 8/2017 Morgan et al.
9,730,717 B2 8/2017 Katsuki et al.
9,730,757 B2 8/2017 Brudniok
9,731,410 B2 8/2017 Hirabayashi et al.
9,733,663 B2 8/2017 Leimbach et al.
9,737,297 B2 8/2017 Racenet et al.
9,737,298 B2 8/2017 Isbell, Jr.
9,737,299 B2 8/2017 Yan
9,737,301 B2 8/2017 Baber et al.
9,737,302 B2 8/2017 Shelton, IV et al.
9,737,303 B2 8/2017 Shelton, IV et al.
9,737,323 B2 8/2017 Thapliyal et al.
9,737,365 B2 8/2017 Hegeman et al.
9,743,927 B2 8/2017 Whitman
9,743,928 B2 8/2017 Shelton, IV et al.
9,743,929 B2 8/2017 Leimbach et al.
D798,319 S 9/2017 Bergstrand et al.
9,750,498 B2 9/2017 Timm et al.
9,750,499 B2 9/2017 Leimbach et al.
9,750,501 B2 9/2017 Shelton, IV et al.
9,750,502 B2 9/2017 Scirica et al.
9,750,503 B2 9/2017 Milliman
9,750,639 B2 9/2017 Barnes et al.
9,751,176 B2 9/2017 McRoberts et al.
9,757,123 B2 9/2017 Giordano et al.
9,757,124 B2 9/2017 Schellin et al.
9,757,126 B2 9/2017 Cappola
9,757,128 B2 9/2017 Baber et al.
9,757,129 B2 9/2017 Williams
9,757,130 B2 9/2017 Shelton, IV
9,763,662 B2 9/2017 Shelton, IV et al.
9,763,668 B2 9/2017 Whitfield et al.
9,770,245 B2 9/2017 Swayze et al.
9,770,274 B2 9/2017 Pool et al.
D798,886 S 10/2017 Prophete et al.
D800,742 S 10/2017 Rhodes
D800,744 S 10/2017 Jitkoff et al.
D800,766 S 10/2017 Park et al.
D800,904 S 10/2017 Leimbach et al.
9,775,608 B2 10/2017 Aronhalt et al.
9,775,609 B2 10/2017 Shelton, IV et al.
9,775,610 B2 10/2017 Nicholas et al.
9,775,611 B2 10/2017 Kostrzewski
9,775,613 B2 10/2017 Shelton, IV et al.
9,775,614 B2 10/2017 Shelton, IV et al.
9,775,618 B2 10/2017 Bettuchi et al.
9,775,635 B2 10/2017 Takei
9,775,678 B2 10/2017 Lohmeier
9,782,169 B2 10/2017 Kimsey et al.
9,782,170 B2 10/2017 Zemlok et al.
9,782,180 B2 10/2017 Smith et al.
9,782,187 B2 10/2017 Zergiebel et al.
9,782,193 B2 10/2017 Thistle
9,782,214 B2 10/2017 Houser et al.
9,788,834 B2 10/2017 Schmid et al.
9,788,835 B2 10/2017 Morgan et al.
9,788,836 B2 10/2017 Overmyer et al.
9,788,847 B2 10/2017 Jinno
9,788,851 B2 10/2017 Dannaher et al.
9,788,902 B2 10/2017 Inoue et al.
9,795,379 B2 10/2017 Leimbach et al.
9,795,380 B2 10/2017 Shelton, IV et al.
9,795,381 B2 10/2017 Shelton, IV
9,795,382 B2 10/2017 Shelton, IV
9,795,383 B2 10/2017 Aldridge et al.
9,795,384 B2 10/2017 Weaner et al.
9,797,486 B2 10/2017 Zergiebel et al.
9,801,626 B2 10/2017 Parihar et al.
9,801,627 B2 10/2017 Harris et al.
9,801,628 B2 10/2017 Harris et al.
9,801,634 B2 10/2017 Shelton, IV et al.
9,801,679 B2 10/2017 Trees et al.
9,802,033 B2 10/2017 Hibner et al.
9,804,618 B2 10/2017 Leimbach et al.
D803,234 S 11/2017 Day et al.
D803,235 S 11/2017 Markson et al.
D803,850 S 11/2017 Chang et al.
9,808,244 B2 11/2017 Leimbach et al.
9,808,246 B2 11/2017 Shelton, IV et al.
9,808,247 B2 11/2017 Shelton, IV et al.
9,808,248 B2 11/2017 Hoffman
9,808,249 B2 11/2017 Shelton, IV
9,814,460 B2 11/2017 Kimsey et al.
9,814,462 B2 11/2017 Woodard, Jr. et al.
9,814,463 B2 11/2017 Williams et al.
9,814,530 B2 11/2017 Weir et al.
9,814,561 B2 11/2017 Forsell
9,815,118 B1 11/2017 Schmitt et al.
9,820,445 B2 11/2017 Simpson et al.
9,820,737 B2 11/2017 Beardsley et al.
9,820,738 B2 11/2017 Lytle, IV et al.
9,820,741 B2 11/2017 Kostrzewski
9,820,768 B2 11/2017 Gee et al.
9,825,455 B2 11/2017 Sandhu et al.
9,826,976 B2 11/2017 Parihar et al.
9,826,977 B2 11/2017 Leimbach et al.
9,826,978 B2 11/2017 Shelton, IV et al.
9,829,698 B2 11/2017 Haraguchi et al.
D806,108 S 12/2017 Day
9,833,235 B2 12/2017 Penna et al.
9,833,236 B2 12/2017 Shelton, IV et al.
9,833,238 B2 12/2017 Baxter et al.
9,833,239 B2 12/2017 Yates et al.
9,833,241 B2 12/2017 Huitema et al.
9,833,242 B2 12/2017 Baxter, III et al.
9,839,420 B2 12/2017 Shelton, IV et al.
9,839,421 B2 12/2017 Zerkle et al.
9,839,422 B2 12/2017 Schellin et al.
9,839,423 B2 12/2017 Vendely et al.
9,839,427 B2 12/2017 Swayze et al.
9,839,428 B2 12/2017 Baxter, III et al.
9,839,429 B2 12/2017 Weisenburgh, II et al.
9,839,480 B2 12/2017 Pribanic et al.
9,839,481 B2 12/2017 Blumenkranz et al.
9,844,368 B2 12/2017 Boudreaux et al.
9,844,369 B2 12/2017 Huitema et al.
9,844,372 B2 12/2017 Shelton, IV et al.
9,844,373 B2 12/2017 Swayze et al.
9,844,374 B2 12/2017 Lytle, IV et al.
9,844,375 B2 12/2017 Overmyer et al.
9,844,376 B2 12/2017 Baxter, III et al.
9,844,379 B2 12/2017 Shelton, IV et al.
9,848,871 B2 12/2017 Harris et al.
9,848,873 B2 12/2017 Shelton, IV
9,848,875 B2 12/2017 Aronhalt et al.
9,848,877 B2 12/2017 Shelton, IV et al.
9,850,994 B2 12/2017 Schena
D808,989 S 1/2018 Ayvazian et al.
9,855,039 B2 1/2018 Racenet et al.
9,855,040 B2 1/2018 Kostrzewski
9,855,662 B2 1/2018 Ruiz Morales et al.
9,861,261 B2 1/2018 Shahinian
9,861,359 B2 1/2018 Shelton, IV et al.
9,861,361 B2 1/2018 Aronhalt et al.
9,861,362 B2 1/2018 Whitman et al.
9,861,366 B2 1/2018 Aranyi
9,861,382 B2 1/2018 Smith et al.
9,861,446 B2 1/2018 Lang
9,867,612 B2 1/2018 Parihar et al.
9,867,613 B2 1/2018 Marczyk et al.
9,867,615 B2 1/2018 Fanelli et al.
9,867,617 B2 1/2018 Ma
9,867,618 B2 1/2018 Hall et al.
9,867,620 B2 1/2018 Fischvogt et al.
9,868,198 B2 1/2018 Nicholas et al.
9,872,682 B2 1/2018 Hess et al.
9,872,683 B2 1/2018 Hopkins et al.
9,872,684 B2 1/2018 Hall et al.

(56) **References Cited**

U.S. PATENT DOCUMENTS

9,872,722 B2 1/2018 Lech
9,877,721 B2 1/2018 Schellin et al.
9,877,722 B2 1/2018 Schellin et al.
9,877,723 B2 1/2018 Hall et al.
9,877,776 B2 1/2018 Boudreaux
D810,099 S 2/2018 Riedel
9,883,843 B2 2/2018 Garlow
9,883,860 B2 2/2018 Leimbach
9,883,861 B2 2/2018 Shelton, IV et al.
9,884,456 B2 2/2018 Schellin et al.
9,888,914 B2 2/2018 Martin et al.
9,888,919 B2 2/2018 Leimbach et al.
9,888,921 B2 2/2018 Williams et al.
9,888,924 B2 2/2018 Ebersole et al.
9,889,230 B2 2/2018 Bennett et al.
9,895,147 B2 2/2018 Shelton, IV
9,895,148 B2 2/2018 Shelton, IV et al.
9,895,813 B2 2/2018 Blumenkranz et al.
9,901,339 B2 2/2018 Farascioni
9,901,341 B2 2/2018 Kostrzewski
9,901,342 B2 2/2018 Shelton, IV et al.
9,901,344 B2 2/2018 Moore et al.
9,901,345 B2 2/2018 Moore et al.
9,901,346 B2 2/2018 Moore et al.
9,901,358 B2 2/2018 Faller et al.
9,901,406 B2 2/2018 State et al.
9,901,412 B2 2/2018 Lathrop et al.
D813,899 S 3/2018 Erant et al.
9,907,456 B2 3/2018 Miyoshi
9,907,552 B2 3/2018 Measamer et al.
9,907,553 B2 3/2018 Cole et al.
9,907,600 B2 3/2018 Stulen et al.
9,907,620 B2 3/2018 Shelton, IV et al.
9,913,641 B2 3/2018 Takemoto et al.
9,913,642 B2 3/2018 Leimbach et al.
9,913,644 B2 3/2018 McCuen
9,913,646 B2 3/2018 Shelton, IV
9,913,647 B2 3/2018 Weisenburgh, II et al.
9,913,648 B2 3/2018 Shelton, IV et al.
9,913,694 B2 3/2018 Brisson
9,913,733 B2 3/2018 Piron et al.
9,918,704 B2 3/2018 Shelton, IV et al.
9,918,714 B2 3/2018 Gibbons, Jr.
9,918,715 B2 3/2018 Menn
9,918,716 B2 3/2018 Baxter, III et al.
9,918,717 B2 3/2018 Czernik
9,918,730 B2 3/2018 Trees et al.
9,924,941 B2 3/2018 Burbank
9,924,942 B2 3/2018 Swayze et al.
9,924,943 B2 3/2018 Mohan Pinjala et al.
9,924,944 B2 3/2018 Shelton, IV et al.
9,924,945 B2 3/2018 Zheng et al.
9,924,946 B2 3/2018 Vendely et al.
9,924,947 B2 3/2018 Shelton, IV et al.
9,924,961 B2 3/2018 Shelton, IV et al.
9,931,106 B2 4/2018 Au et al.
9,931,116 B2 4/2018 Racenet et al.
9,931,117 B2 4/2018 Hathaway et al.
9,931,118 B2 4/2018 Shelton, IV et al.
9,931,120 B2 4/2018 Chen et al.
9,936,949 B2 4/2018 Measamer et al.
9,936,950 B2 4/2018 Shelton, IV et al.
9,936,951 B2 4/2018 Hufnagel et al.
9,936,952 B2 4/2018 Demmy
9,936,954 B2 4/2018 Shelton, IV et al.
9,937,626 B2 4/2018 Rockrohr
9,943,309 B2 4/2018 Shelton, IV et al.
9,943,310 B2 4/2018 Harris et al.
9,943,312 B2 4/2018 Posada et al.
9,949,754 B2 4/2018 Newhauser et al.
9,953,193 B2 4/2018 Butler et al.
D819,072 S 5/2018 Clediere
9,955,954 B2 5/2018 Destoumieux et al.
9,955,965 B2 5/2018 Chen et al.
9,955,966 B2 5/2018 Zergiebel
9,956,677 B2 5/2018 Baskar et al.
9,962,129 B2 5/2018 Jerebko et al.
9,962,157 B2 5/2018 Sapre
9,962,158 B2 5/2018 Hall et al.
9,962,159 B2 5/2018 Heinrich et al.
9,962,161 B2 5/2018 Scheib et al.
9,968,354 B2 5/2018 Shelton, IV et al.
9,968,355 B2 5/2018 Shelton, IV et al.
9,968,356 B2 5/2018 Shelton, IV et al.
9,968,397 B2 5/2018 Taylor et al.
9,974,529 B2 5/2018 Shelton, IV et al.
9,974,538 B2 5/2018 Baxter, III et al.
9,974,539 B2 5/2018 Yates et al.
9,974,541 B2 5/2018 Calderoni
9,974,542 B2 5/2018 Hodgkinson
9,980,713 B2 5/2018 Aronhalt et al.
9,980,724 B2 5/2018 Farascioni et al.
9,980,729 B2 5/2018 Moore et al.
9,980,740 B2 5/2018 Krause et al.
9,980,769 B2 5/2018 Trees et al.
D819,680 S 6/2018 Nguyen
D819,682 S 6/2018 Howard et al.
D819,684 S 6/2018 Dart
D820,307 S 6/2018 Jian et al.
D820,867 S 6/2018 Dickens et al.
9,987,000 B2 6/2018 Shelton, IV et al.
9,987,003 B2 6/2018 Timm et al.
9,987,006 B2 6/2018 Morgan et al.
9,987,008 B2 6/2018 Scirica et al.
9,987,095 B2 6/2018 Chowaniec et al.
9,987,097 B2 6/2018 van der Weide et al.
9,987,099 B2 6/2018 Chen et al.
9,993,248 B2 6/2018 Shelton, IV et al.
9,993,258 B2 6/2018 Shelton, IV et al.
9,993,284 B2 6/2018 Boudreaux
9,999,408 B2 6/2018 Boudreaux et al.
9,999,423 B2 6/2018 Schuckmann et al.
9,999,426 B2 6/2018 Moore et al.
9,999,431 B2 6/2018 Shelton, IV et al.
9,999,472 B2 6/2018 Weir et al.
10,004,497 B2 6/2018 Overmyer et al.
10,004,498 B2 6/2018 Morgan et al.
10,004,500 B2 6/2018 Shelton, IV et al.
10,004,501 B2 6/2018 Shelton, IV et al.
10,004,505 B2 6/2018 Moore et al.
10,004,506 B2 6/2018 Shelton, IV et al.
10,004,552 B1 6/2018 Kleyman et al.
D822,206 S 7/2018 Shelton, IV et al.
10,010,322 B2 7/2018 Shelton, IV et al.
10,010,324 B2 7/2018 Huitema et al.
10,010,395 B2 7/2018 Puckett et al.
10,013,049 B2 7/2018 Leimbach et al.
10,016,199 B2 7/2018 Baber et al.
10,016,656 B2 7/2018 Devor et al.
10,022,120 B2 7/2018 Martin et al.
10,022,123 B2 7/2018 Williams et al.
10,022,125 B2 7/2018 (Prommersberger) Stopek et al.
10,024,407 B2 7/2018 Aranyi et al.
10,028,742 B2 7/2018 Shelton, IV et al.
10,028,743 B2 7/2018 Shelton, IV et al.
10,028,744 B2 7/2018 Shelton, IV et al.
10,028,761 B2 7/2018 Leimbach et al.
10,029,108 B2 7/2018 Powers et al.
10,029,125 B2 7/2018 Shapiro et al.
10,034,344 B2 7/2018 Yoshida
10,034,668 B2 7/2018 Ebner
D826,405 S 8/2018 Shelton, IV et al.
10,039,440 B2 8/2018 Fenech et al.
10,039,529 B2 8/2018 Kerr et al.
10,039,532 B2 8/2018 Srinivas et al.
10,039,545 B2 8/2018 Sadowski et al.
10,041,822 B2 8/2018 Zemlok
10,045,769 B2 8/2018 Aronhalt et al.
10,045,776 B2 8/2018 Shelton, IV et al.
10,045,778 B2 8/2018 Yates et al.
10,045,779 B2 8/2018 Savage et al.
10,045,781 B2 8/2018 Cropper et al.
10,045,782 B2 8/2018 Murthy Aravalli
10,045,869 B2 8/2018 Forsell

(56) **References Cited**

U.S. PATENT DOCUMENTS

10,046,904 B2 8/2018 Evans et al.
10,052,044 B2 8/2018 Shelton, IV et al.
10,052,099 B2 8/2018 Morgan et al.
10,052,100 B2 8/2018 Morgan et al.
10,052,102 B2 8/2018 Baxter, III et al.
10,052,104 B2 8/2018 Shelton, IV et al.
10,052,164 B2 8/2018 Overmyer
10,058,317 B2 8/2018 Fan et al.
10,058,327 B2 8/2018 Weisenburgh, II et al.
10,058,373 B2 8/2018 Takashino et al.
10,058,395 B2 8/2018 Devengenzo et al.
10,058,963 B2 8/2018 Shelton, IV et al.
10,064,620 B2 9/2018 Gettinger et al.
10,064,621 B2 9/2018 Kerr et al.
10,064,622 B2 9/2018 Murthy Aravalli
10,064,624 B2 9/2018 Shelton, IV et al.
10,064,639 B2 9/2018 Ishida et al.
10,064,642 B2 9/2018 Marczyk et al.
10,064,649 B2 9/2018 Golebieski et al.
10,064,688 B2 9/2018 Shelton, IV et al.
10,070,861 B2 9/2018 Spivey et al.
10,070,863 B2 9/2018 Swayze et al.
10,071,452 B2 9/2018 Shelton, IV et al.
10,076,325 B2 9/2018 Huang et al.
10,076,326 B2 9/2018 Yates et al.
10,076,340 B2 9/2018 Belagali et al.
10,080,552 B2 9/2018 Nicholas et al.
D830,550 S 10/2018 Miller et al.
D831,209 S 10/2018 Huitema et al.
D831,676 S 10/2018 Park et al.
D832,301 S 10/2018 Smith
10,085,624 B2 10/2018 Isoda et al.
10,085,643 B2 10/2018 Bandic et al.
10,085,728 B2 10/2018 Jogasaki et al.
10,085,746 B2 10/2018 Fischvogt
10,085,748 B2 10/2018 Morgan et al.
10,085,749 B2 10/2018 Cappola et al.
10,085,750 B2 10/2018 Zergiebel et al.
10,085,751 B2 10/2018 Overmyer et al.
10,085,754 B2 10/2018 Sniffin et al.
10,085,806 B2 10/2018 Hagn et al.
10,092,290 B2 10/2018 Yigit et al.
10,092,292 B2 10/2018 Boudreaux et al.
10,098,635 B2 10/2018 Burbank
10,098,636 B2 10/2018 Shelton, IV et al.
10,098,640 B2 10/2018 Bertolero et al.
10,098,642 B2 10/2018 Baxter, III et al.
10,099,303 B2 10/2018 Yoshida et al.
10,101,861 B2 10/2018 Kiyoto
10,105,126 B2 10/2018 Sauer
10,105,128 B2 10/2018 Cooper et al.
10,105,136 B2 10/2018 Yates et al.
10,105,139 B2 10/2018 Yates et al.
10,105,140 B2 10/2018 Malinouskas et al.
10,105,142 B2 10/2018 Baxter, III et al.
10,105,149 B2 10/2018 Haider et al.
10,106,932 B2 10/2018 Anderson et al.
10,111,657 B2 10/2018 McCuen
10,111,658 B2 10/2018 Chowaniec et al.
10,111,660 B2 10/2018 Hemmann
10,111,665 B2 10/2018 Aranyi et al.
10,111,679 B2 10/2018 Baber et al.
10,111,698 B2 10/2018 Scheib et al.
10,111,702 B2 10/2018 Kostrzewski
D833,608 S 11/2018 Miller et al.
10,117,649 B2 11/2018 Baxter et al.
10,117,650 B2 11/2018 Nicholas et al.
10,117,652 B2 11/2018 Schmid et al.
10,117,653 B2 11/2018 Leimbach et al.
10,117,654 B2 11/2018 Ingmanson et al.
10,123,798 B2 11/2018 Baxter, III et al.
10,123,845 B2 11/2018 Yeung
10,124,493 B2 11/2018 Rothfuss et al.
10,130,352 B2 11/2018 Widenhouse et al.
10,130,359 B2 11/2018 Hess et al.
10,130,360 B2 11/2018 Olson et al.
10,130,361 B2 11/2018 Yates et al.
10,130,363 B2 11/2018 Huitema et al.
10,130,366 B2 11/2018 Shelton, IV et al.
10,130,367 B2 11/2018 Cappola et al.
10,130,382 B2 11/2018 Gladstone
10,130,738 B2 11/2018 Shelton, IV et al.
10,130,830 B2 11/2018 Miret Carceller et al.
10,133,248 B2 11/2018 Fitzsimmons et al.
10,135,242 B2 11/2018 Baber et al.
10,136,879 B2 11/2018 Ross et al.
10,136,887 B2 11/2018 Shelton, IV et al.
10,136,889 B2 11/2018 Shelton, IV et al.
10,136,890 B2 11/2018 Shelton, IV et al.
10,136,891 B2 11/2018 Shelton, IV et al.
10,136,949 B2 11/2018 Felder et al.
D835,659 S 12/2018 Anzures et al.
D836,124 S 12/2018 Fan
10,143,474 B2 12/2018 Bucciaglia et al.
10,146,423 B1 12/2018 Reed et al.
10,149,679 B2 12/2018 Shelton, IV et al.
10,149,680 B2 12/2018 Parihar et al.
10,149,682 B2 12/2018 Shelton, IV et al.
10,149,683 B2 12/2018 Smith et al.
10,149,712 B2 12/2018 Manwaring et al.
10,152,789 B2 12/2018 Carnes et al.
10,154,841 B2 12/2018 Weaner et al.
10,159,481 B2 12/2018 Whitman et al.
10,159,482 B2 12/2018 Swayze et al.
10,159,483 B2 12/2018 Beckman et al.
10,159,506 B2 12/2018 Boudreaux et al.
10,161,816 B2 12/2018 Jackson et al.
10,163,065 B1 12/2018 Koski et al.
10,163,589 B2 12/2018 Zergiebel et al.
10,164,466 B2 12/2018 Calderoni
D837,244 S 1/2019 Kuo et al.
D837,245 S 1/2019 Kuo et al.
10,166,023 B2 1/2019 Vendely et al.
10,166,025 B2 1/2019 Leimbach et al.
10,166,026 B2 1/2019 Shelton, IV et al.
10,172,611 B2 1/2019 Shelton, IV et al.
10,172,615 B2 1/2019 Marczyk et al.
10,172,616 B2 1/2019 Murray et al.
10,172,617 B2 1/2019 Shelton, IV et al.
10,172,618 B2 1/2019 Shelton, IV et al.
10,172,619 B2 1/2019 Harris et al.
10,172,620 B2 1/2019 Harris et al.
10,172,636 B2 1/2019 Stulen et al.
10,172,669 B2 1/2019 Felder et al.
10,175,127 B2 1/2019 Collins et al.
10,178,992 B2 1/2019 Wise et al.
10,180,463 B2 1/2019 Beckman et al.
10,182,813 B2 1/2019 Leimbach et al.
10,182,815 B2 1/2019 Williams et al.
10,182,816 B2 1/2019 Shelton, IV et al.
10,182,818 B2 1/2019 Hensel et al.
10,182,819 B2 1/2019 Shelton, IV
10,182,868 B2 1/2019 Meier et al.
10,188,385 B2 1/2019 Kerr et al.
10,188,389 B2 1/2019 Vendely et al.
10,188,393 B2 1/2019 Smith et al.
10,188,394 B2 1/2019 Shelton, IV et al.
10,190,888 B2 1/2019 Hryb et al.
D839,900 S 2/2019 Gan
D841,667 S 2/2019 Coren
10,194,801 B2 2/2019 Elhawary et al.
10,194,904 B2 2/2019 Viola et al.
10,194,907 B2 2/2019 Marczyk et al.
10,194,908 B2 2/2019 Duque et al.
10,194,910 B2 2/2019 Shelton, IV et al.
10,194,911 B2 2/2019 Miller et al.
10,194,912 B2 2/2019 Scheib et al.
10,194,913 B2 2/2019 Nalagatla et al.
10,194,976 B2 2/2019 Boudreaux
10,194,992 B2 2/2019 Robinson
10,201,348 B2 2/2019 Scheib et al.
10,201,349 B2 2/2019 Leimbach et al.
10,201,363 B2 2/2019 Shelton, IV
10,201,364 B2 2/2019 Leimbach et al.

(56) **References Cited**

U.S. PATENT DOCUMENTS

10,201,365 B2 2/2019 Boudreaux et al.
10,201,381 B2 2/2019 Zergiebel et al.
10,206,605 B2 2/2019 Shelton, IV et al.
10,206,676 B2 2/2019 Shelton, IV
10,206,677 B2 2/2019 Harris et al.
10,206,678 B2 2/2019 Shelton, IV et al.
10,206,748 B2 2/2019 Burbank
10,210,244 B1 2/2019 Branavan et al.
10,211,586 B2 2/2019 Adams et al.
10,213,198 B2 2/2019 Aronhalt et al.
10,213,201 B2 2/2019 Shelton, IV et al.
10,213,202 B2 2/2019 Flanagan et al.
10,213,203 B2 2/2019 Swayze et al.
10,213,204 B2 2/2019 Aranyi et al.
10,213,262 B2 2/2019 Shelton, IV et al.
D842,328 S 3/2019 Jian et al.
10,219,811 B2 3/2019 Haider et al.
10,219,832 B2 3/2019 Bagwell et al.
10,220,522 B2 3/2019 Rockrohr
10,226,239 B2 3/2019 Nicholas et al.
10,226,249 B2 3/2019 Jaworek et al.
10,226,250 B2 3/2019 Beckman et al.
10,226,251 B2 3/2019 Scheib et al.
10,226,274 B2 3/2019 Worrell et al.
10,231,634 B2 3/2019 Zand et al.
10,231,653 B2 3/2019 Bohm et al.
10,231,734 B2 3/2019 Thompson et al.
10,231,794 B2 3/2019 Shelton, IV et al.
10,238,385 B2 3/2019 Yates et al.
10,238,386 B2 3/2019 Overmyer et al.
10,238,387 B2 3/2019 Yates et al.
10,238,389 B2 3/2019 Yates et al.
10,238,390 B2 3/2019 Harris et al.
10,238,391 B2 3/2019 Leimbach et al.
D844,666 S 4/2019 Espeleta et al.
D844,667 S 4/2019 Espeleta et al.
D845,342 S 4/2019 Espeleta et al.
D847,199 S 4/2019 Whitmore
10,244,991 B2 4/2019 Shademan et al.
10,245,027 B2 4/2019 Shelton, IV et al.
10,245,028 B2 4/2019 Shelton, IV et al.
10,245,029 B2 4/2019 Hunter et al.
10,245,030 B2 4/2019 Hunter et al.
10,245,032 B2 4/2019 Shelton, IV
10,245,033 B2 4/2019 Overmyer et al.
10,245,034 B2 4/2019 Shelton, IV et al.
10,245,035 B2 4/2019 Swayze et al.
10,245,038 B2 4/2019 Hopkins et al.
10,245,058 B2 4/2019 Omori et al.
10,251,645 B2 4/2019 Kostrzewski
10,251,648 B2 4/2019 Harris et al.
10,251,649 B2 4/2019 Schellin et al.
10,251,725 B2 4/2019 Valentine et al.
10,258,322 B2 4/2019 Fanton et al.
10,258,330 B2 4/2019 Shelton, IV et al.
10,258,331 B2 4/2019 Shelton, IV et al.
10,258,332 B2 4/2019 Schmid et al.
10,258,333 B2 4/2019 Shelton, IV et al.
10,258,336 B2 4/2019 Baxter, III et al.
10,258,363 B2 4/2019 Worrell et al.
10,258,418 B2 4/2019 Shelton, IV et al.
10,264,797 B2 4/2019 Zhang et al.
10,265,065 B2 4/2019 Shelton, IV et al.
10,265,067 B2 4/2019 Yates et al.
10,265,068 B2 4/2019 Harris et al.
10,265,072 B2 4/2019 Shelton, IV et al.
10,265,073 B2 4/2019 Scheib et al.
10,265,074 B2 4/2019 Shelton, IV et al.
10,265,090 B2 4/2019 Ingmanson et al.
10,271,840 B2 4/2019 Sapre
10,271,844 B2 4/2019 Valentine et al.
10,271,845 B2 4/2019 Shelton, IV
10,271,846 B2 4/2019 Shelton, IV et al.
10,271,847 B2 4/2019 Racenet et al.
10,271,849 B2 4/2019 Vendely et al.
10,271,851 B2 4/2019 Shelton, IV et al.
D847,989 S 5/2019 Shelton, IV et al.
D848,473 S 5/2019 Zhu et al.
D849,046 S 5/2019 Kuo et al.
10,278,696 B2 5/2019 Gurumurthy et al.
10,278,697 B2 5/2019 Shelton, IV et al.
10,278,702 B2 5/2019 Shelton, IV et al.
10,278,703 B2 5/2019 Nativ et al.
10,278,707 B2 5/2019 Thompson et al.
10,278,722 B2 5/2019 Shelton, IV et al.
10,278,780 B2 5/2019 Shelton, IV
10,285,694 B2 5/2019 Viola et al.
10,285,695 B2 5/2019 Jaworek et al.
10,285,699 B2 5/2019 Vendely et al.
10,285,700 B2 5/2019 Scheib
10,285,705 B2 5/2019 Shelton, IV et al.
10,285,724 B2 5/2019 Faller et al.
10,285,750 B2 5/2019 Coulson et al.
10,292,701 B2 5/2019 Scheib et al.
10,292,704 B2 5/2019 Harris et al.
10,292,707 B2 5/2019 Shelton, IV et al.
10,293,100 B2 5/2019 Shelton, IV et al.
10,293,553 B2 5/2019 Racenet et al.
10,299,787 B2 5/2019 Shelton, IV
10,299,788 B2 5/2019 Heinrich et al.
10,299,789 B2 5/2019 Marczyk et al.
10,299,790 B2 5/2019 Beardsley
10,299,792 B2 5/2019 Huitema et al.
10,299,817 B2 5/2019 Shelton, IV et al.
10,299,818 B2 5/2019 Riva
10,299,878 B2 5/2019 Shelton, IV et al.
10,303,851 B2 5/2019 Nguyen et al.
D850,617 S 6/2019 Shelton, IV et al.
D851,676 S 6/2019 Foss et al.
D851,762 S 6/2019 Shelton, IV et al.
10,307,159 B2 6/2019 Harris et al.
10,307,160 B2 6/2019 Vendely et al.
10,307,161 B2 6/2019 Jankowski
10,307,163 B2 6/2019 Moore et al.
10,307,170 B2 6/2019 Parfett et al.
10,307,202 B2 6/2019 Smith et al.
10,314,559 B2 6/2019 Razzaque et al.
10,314,577 B2 6/2019 Laurent et al.
10,314,578 B2 6/2019 Leimbach et al.
10,314,579 B2 6/2019 Chowaniec et al.
10,314,580 B2 6/2019 Scheib et al.
10,314,582 B2 6/2019 Shelton, IV et al.
10,314,584 B2 6/2019 Scirica et al.
10,314,587 B2 6/2019 Harris et al.
10,314,588 B2 6/2019 Turner et al.
10,314,589 B2 6/2019 Shelton, IV et al.
10,314,590 B2 6/2019 Shelton, IV et al.
10,315,566 B2 6/2019 Choi et al.
10,321,907 B2 6/2019 Shelton, IV et al.
10,321,909 B2 6/2019 Shelton, IV et al.
10,321,927 B2 6/2019 Hinman
10,327,743 B2 6/2019 St. Goar et al.
10,327,764 B2 6/2019 Harris et al.
10,327,765 B2 6/2019 Timm et al.
10,327,767 B2 6/2019 Shelton, IV et al.
10,327,769 B2 6/2019 Overmyer et al.
10,327,776 B2 6/2019 Harris et al.
10,327,777 B2 6/2019 Harris et al.
D854,032 S 7/2019 Jones et al.
D854,151 S 7/2019 Shelton, IV et al.
10,335,144 B2 7/2019 Shelton, IV et al.
10,335,145 B2 7/2019 Harris et al.
10,335,147 B2 7/2019 Rector et al.
10,335,148 B2 7/2019 Shelton, IV et al.
10,335,149 B2 7/2019 Baxter, III et al.
10,335,150 B2 7/2019 Shelton, IV
10,335,151 B2 7/2019 Shelton, IV et al.
10,337,148 B2 7/2019 Rouse et al.
10,342,533 B2 7/2019 Shelton, IV et al.
10,342,535 B2 7/2019 Scheib et al.
10,342,541 B2 7/2019 Shelton, IV et al.
10,342,543 B2 7/2019 Shelton, IV et al.
10,342,623 B2 7/2019 Huelman et al.
10,349,937 B2 7/2019 Williams

(56) **References Cited**

U.S. PATENT DOCUMENTS

10,349,939 B2 7/2019 Shelton, IV et al.
10,349,941 B2 7/2019 Marczyk et al.
10,349,963 B2 7/2019 Fiksen et al.
10,350,016 B2 7/2019 Burbank et al.
10,357,246 B2 7/2019 Shelton, IV et al.
10,357,247 B2 7/2019 Shelton, IV et al.
10,357,248 B2 7/2019 Dalessandro et al.
10,357,252 B2 7/2019 Harris et al.
10,363,031 B2 7/2019 Alexander, III et al.
10,363,033 B2 7/2019 Timm et al.
10,363,036 B2 7/2019 Yates et al.
10,363,037 B2 7/2019 Aronhalt et al.
D855,634 S 8/2019 Kim
D856,359 S 8/2019 Huang et al.
10,368,838 B2 8/2019 Williams et al.
10,368,861 B2 8/2019 Baxter, III et al.
10,368,863 B2 8/2019 Timm et al.
10,368,864 B2 8/2019 Harris et al.
10,368,865 B2 8/2019 Harris et al.
10,368,866 B2 8/2019 Wang et al.
10,368,867 B2 8/2019 Harris et al.
10,368,892 B2 8/2019 Stulen et al.
10,374,544 B2 8/2019 Yokoyama et al.
10,376,263 B2 8/2019 Morgan et al.
10,383,626 B2 8/2019 Soltz
10,383,628 B2 8/2019 Kang et al.
10,383,629 B2 8/2019 Ross et al.
10,383,630 B2 8/2019 Shelton, IV et al.
10,383,631 B2 8/2019 Collings et al.
10,383,633 B2 8/2019 Shelton, IV et al.
10,383,634 B2 8/2019 Shelton, IV et al.
10,390,823 B2 8/2019 Shelton, IV et al.
10,390,825 B2 8/2019 Shelton, IV et al.
10,390,828 B2 8/2019 Vendely et al.
10,390,829 B2 8/2019 Eckert et al.
10,390,830 B2 8/2019 Schulz
10,390,841 B2 8/2019 Shelton, IV et al.
10,390,897 B2 8/2019 Kostrzewski
D859,466 S 9/2019 Okada et al.
D860,219 S 9/2019 Rasmussen et al.
D861,035 S 9/2019 Park et al.
10,398,433 B2 9/2019 Boudreaux et al.
10,398,434 B2 9/2019 Shelton, IV et al.
10,398,436 B2 9/2019 Shelton, IV et al.
10,398,460 B2 9/2019 Overmyer
10,404,136 B2 9/2019 Oktavec et al.
10,405,854 B2 9/2019 Schmid et al.
10,405,857 B2 9/2019 Shelton, IV et al.
10,405,859 B2 9/2019 Harris et al.
10,405,863 B2 9/2019 Wise et al.
10,405,914 B2 9/2019 Manwaring et al.
10,405,932 B2 9/2019 Overmyer
10,405,937 B2 9/2019 Black et al.
10,413,155 B2 9/2019 Inoue
10,413,291 B2 9/2019 Worthington et al.
10,413,293 B2 9/2019 Shelton, IV et al.
10,413,294 B2 9/2019 Shelton, IV et al.
10,413,297 B2 9/2019 Harris et al.
10,413,370 B2 9/2019 Yates et al.
10,413,373 B2 9/2019 Yates et al.
10,420,548 B2 9/2019 Whitman et al.
10,420,549 B2 9/2019 Yates et al.
10,420,550 B2 9/2019 Shelton, IV
10,420,551 B2 9/2019 Calderoni
10,420,552 B2 9/2019 Shelton, IV et al.
10,420,553 B2 9/2019 Shelton, IV et al.
10,420,554 B2 9/2019 Collings et al.
10,420,555 B2 9/2019 Shelton, IV et al.
10,420,558 B2 9/2019 Nalagatla et al.
10,420,559 B2 9/2019 Marczyk et al.
10,420,560 B2 9/2019 Shelton, IV et al.
10,420,561 B2 9/2019 Shelton, IV et al.
10,420,577 B2 9/2019 Chowaniec et al.
D861,707 S 10/2019 Yang
D862,518 S 10/2019 Niven et al.
D863,343 S 10/2019 Mazlish et al.
D864,388 S 10/2019 Barber
D865,174 S 10/2019 Auld et al.
D865,175 S 10/2019 Widenhouse et al.
10,426,463 B2 10/2019 Shelton, IV et al.
10,426,466 B2 10/2019 Contini et al.
10,426,467 B2 10/2019 Miller et al.
10,426,468 B2 10/2019 Contini et al.
10,426,469 B2 10/2019 Shelton, IV et al.
10,426,471 B2 10/2019 Shelton, IV et al.
10,426,476 B2 10/2019 Harris et al.
10,426,477 B2 10/2019 Harris et al.
10,426,478 B2 10/2019 Shelton, IV et al.
10,426,481 B2 10/2019 Aronhalt et al.
10,426,555 B2 10/2019 Crowley et al.
10,433,837 B2 10/2019 Worthington et al.
10,433,839 B2 10/2019 Scheib et al.
10,433,840 B2 10/2019 Shelton, IV et al.
10,433,842 B2 10/2019 Amariglio et al.
10,433,844 B2 10/2019 Shelton, IV et al.
10,433,845 B2 10/2019 Baxter, III et al.
10,433,846 B2 10/2019 Vendely et al.
10,433,849 B2 10/2019 Shelton, IV et al.
10,433,918 B2 10/2019 Shelton, IV et al.
10,441,279 B2 10/2019 Shelton, IV et al.
10,441,280 B2 10/2019 Timm et al.
10,441,281 B2 10/2019 Shelton, IV et al.
10,441,285 B2 10/2019 Shelton, IV et al.
10,441,286 B2 10/2019 Shelton, IV et al.
10,441,345 B2 10/2019 Aldridge et al.
10,441,369 B2 10/2019 Shelton, IV et al.
10,448,948 B2 10/2019 Shelton, IV et al.
10,448,950 B2 10/2019 Shelton, IV et al.
10,448,952 B2 10/2019 Shelton, IV et al.
10,456,122 B2 10/2019 Koltz et al.
10,456,132 B2 10/2019 Gettinger et al.
10,456,133 B2 10/2019 Yates et al.
10,456,137 B2 10/2019 Vendely et al.
10,456,140 B2 10/2019 Shelton, IV et al.
D865,796 S 11/2019 Xu et al.
10,463,367 B2 11/2019 Kostrzewski et al.
10,463,369 B2 11/2019 Shelton, IV et al.
10,463,370 B2 11/2019 Yates et al.
10,463,371 B2 11/2019 Kostrzewski
10,463,372 B2 11/2019 Shelton, IV et al.
10,463,373 B2 11/2019 Mozdzierz et al.
10,463,382 B2 11/2019 Ingmanson et al.
10,463,383 B2 11/2019 Shelton, IV et al.
10,463,384 B2 11/2019 Shelton, IV et al.
10,470,762 B2 11/2019 Leimbach et al.
10,470,763 B2 11/2019 Yates et al.
10,470,764 B2 11/2019 Baxter, III et al.
10,470,767 B2 11/2019 Gleiman et al.
10,470,768 B2 11/2019 Harris et al.
10,470,769 B2 11/2019 Shelton, IV et al.
10,471,282 B2 11/2019 Kirk et al.
10,471,576 B2 11/2019 Totsu
10,471,607 B2 11/2019 Butt et al.
10,478,181 B2 11/2019 Shelton, IV et al.
10,478,182 B2 11/2019 Taylor
10,478,185 B2 11/2019 Nicholas
10,478,187 B2 11/2019 Shelton, IV et al.
10,478,188 B2 11/2019 Harris et al.
10,478,189 B2 11/2019 Bear et al.
10,478,190 B2 11/2019 Miller et al.
10,478,207 B2 11/2019 Lathrop
10,482,292 B2 11/2019 Clouser et al.
10,485,536 B2 11/2019 Ming et al.
10,485,537 B2 11/2019 Yates et al.
10,485,539 B2 11/2019 Shelton, IV et al.
10,485,541 B2 11/2019 Shelton, IV et al.
10,485,542 B2 11/2019 Shelton, IV et al.
10,485,543 B2 11/2019 Shelton, IV et al.
10,485,546 B2 11/2019 Shelton, IV et al.
10,485,547 B2 11/2019 Shelton, IV et al.
D869,655 S 12/2019 Shelton, IV et al.
D870,742 S 12/2019 Cornell
10,492,783 B2 12/2019 Shelton, IV et al.
10,492,785 B2 12/2019 Overmyer et al.

(56) **References Cited**

U.S. PATENT DOCUMENTS

10,492,787 B2 12/2019 Smith et al.
10,492,814 B2 12/2019 Snow et al.
10,492,847 B2 12/2019 Godara et al.
10,492,851 B2 12/2019 Hughett, Sr. et al.
10,498,269 B2 12/2019 Zemlok et al.
10,499,890 B2 12/2019 Shelton, IV et al.
10,499,914 B2 12/2019 Huang et al.
10,499,917 B2 12/2019 Scheib et al.
10,499,918 B2 12/2019 Schellin et al.
10,500,000 B2 12/2019 Swayze et al.
10,500,004 B2 12/2019 Hanuschik et al.
10,500,309 B2 12/2019 Shah et al.
10,507,034 B2 12/2019 Timm
10,508,720 B2 12/2019 Nicholas
10,512,461 B2 12/2019 Gupta et al.
10,512,462 B2 12/2019 Felder et al.
10,512,464 B2 12/2019 Park et al.
10,517,590 B2 12/2019 Giordano et al.
10,517,592 B2 12/2019 Shelton, IV et al.
10,517,594 B2 12/2019 Shelton, IV et al.
10,517,595 B2 12/2019 Hunter et al.
10,517,596 B2 12/2019 Hunter et al.
10,517,599 B2 12/2019 Baxter, III et al.
10,517,682 B2 12/2019 Giordano et al.
10,524,784 B2 1/2020 Kostrzewski
10,524,787 B2 1/2020 Shelton, IV et al.
10,524,788 B2 1/2020 Vendely et al.
10,524,789 B2 1/2020 Swayze et al.
10,524,790 B2 1/2020 Shelton, IV et al.
10,524,795 B2 1/2020 Nalagatla et al.
10,524,870 B2 1/2020 Saraliev et al.
10,531,874 B2 1/2020 Morgan et al.
10,531,887 B2 1/2020 Shelton, IV et al.
10,537,324 B2 1/2020 Shelton, IV et al.
10,537,325 B2 1/2020 Bakos et al.
10,537,351 B2 1/2020 Shelton, IV et al.
10,542,908 B2 1/2020 Mei et al.
10,542,974 B2 1/2020 Yates et al.
10,542,976 B2 1/2020 Calderoni et al.
10,542,978 B2 1/2020 Chowaniec et al.
10,542,979 B2 1/2020 Shelton, IV et al.
10,542,982 B2 1/2020 Beckman et al.
10,542,985 B2 1/2020 Zhan et al.
10,542,988 B2 1/2020 Schellin et al.
10,542,991 B2 1/2020 Shelton, IV et al.
10,548,504 B2 2/2020 Shelton, IV et al.
10,548,593 B2 2/2020 Shelton, IV et al.
10,548,600 B2 2/2020 Shelton, IV et al.
10,548,673 B2 2/2020 Harris et al.
10,561,412 B2 2/2020 Bookbinder et al.
10,561,418 B2 2/2020 Richard et al.
10,561,419 B2 2/2020 Beardsley
10,561,420 B2 2/2020 Harris et al.
10,561,422 B2 2/2020 Schellin et al.
10,561,432 B2 2/2020 Estrella et al.
10,561,474 B2 2/2020 Adams et al.
10,562,160 B2 2/2020 Iwata et al.
10,568,493 B2 2/2020 Blase et al.
10,568,621 B2 2/2020 Shelton, IV et al.
10,568,624 B2 2/2020 Shelton, IV et al.
10,568,625 B2 2/2020 Harris et al.
10,568,626 B2 2/2020 Shelton, IV et al.
10,568,629 B2 2/2020 Shelton, IV et al.
10,568,632 B2 2/2020 Miller et al.
10,568,652 B2 2/2020 Hess et al.
10,569,071 B2 2/2020 Harris et al.
D879,808 S 3/2020 Harris et al.
D879,809 S 3/2020 Harris et al.
10,575,868 B2 3/2020 Hall et al.
10,580,320 B2 3/2020 Kamiguchi et al.
10,582,928 B2 3/2020 Hunter et al.
10,588,231 B2 3/2020 Sgroi, Jr. et al.
10,588,623 B2 3/2020 Schmid et al.
10,588,625 B2 3/2020 Weaner et al.
10,588,626 B2 3/2020 Overmyer et al.
10,588,629 B2 3/2020 Malinouskas et al.
10,588,630 B2 3/2020 Shelton, IV et al.
10,588,631 B2 3/2020 Shelton, IV et al.
10,588,632 B2 3/2020 Shelton, IV et al.
10,588,633 B2 3/2020 Shelton, IV et al.
10,589,410 B2 3/2020 Aho
10,595,835 B2 3/2020 Kerr et al.
10,595,862 B2 3/2020 Shelton, IV et al.
10,595,882 B2 3/2020 Parfett et al.
10,595,887 B2 3/2020 Shelton, IV et al.
10,595,929 B2 3/2020 Boudreaux et al.
10,603,036 B2 3/2020 Hunter et al.
10,603,039 B2 3/2020 Vendely et al.
10,603,041 B2 3/2020 Miller et al.
10,603,117 B2 3/2020 Schings et al.
10,603,128 B2 3/2020 Zergiebel et al.
D882,783 S 4/2020 Shelton, IV et al.
10,610,224 B2 4/2020 Shelton, IV et al.
10,610,225 B2 4/2020 Reed et al.
10,610,236 B2 4/2020 Baril
10,610,313 B2 4/2020 Bailey et al.
10,610,346 B2 4/2020 Schwartz
10,614,184 B2 4/2020 Solki
10,617,411 B2 4/2020 Williams
10,617,412 B2 4/2020 Shelton, IV et al.
10,617,413 B2 4/2020 Shelton, IV et al.
10,617,414 B2 4/2020 Shelton, IV et al.
10,617,416 B2 4/2020 Leimbach et al.
10,617,417 B2 4/2020 Baxter, III et al.
10,617,418 B2 4/2020 Barton et al.
10,617,420 B2 4/2020 Shelton, IV et al.
10,617,438 B2 4/2020 O'Keefe et al.
10,624,616 B2 4/2020 Mukherjee et al.
10,624,630 B2 4/2020 Deville et al.
10,624,633 B2 4/2020 Shelton, IV et al.
10,624,634 B2 4/2020 Shelton, IV et al.
10,624,635 B2 4/2020 Harris et al.
10,624,709 B2 4/2020 Remm
10,624,861 B2 4/2020 Widenhouse et al.
10,625,062 B2 4/2020 Matlock et al.
10,631,857 B2 4/2020 Kostrzewski
10,631,858 B2 4/2020 Burbank
10,631,859 B2 4/2020 Shelton, IV et al.
10,631,860 B2 4/2020 Bakos et al.
10,636,104 B2 4/2020 Mazar et al.
10,639,018 B2 5/2020 Shelton, IV et al.
10,639,034 B2 5/2020 Harris et al.
10,639,035 B2 5/2020 Shelton, IV et al.
10,639,036 B2 5/2020 Yates et al.
10,639,037 B2 5/2020 Shelton, IV et al.
10,639,089 B2 5/2020 Manwaring et al.
10,639,115 B2 5/2020 Shelton, IV et al.
10,642,633 B1 5/2020 Chopra et al.
10,645,905 B2 5/2020 Gandola et al.
10,646,220 B2 5/2020 Shelton, IV et al.
10,646,292 B2 5/2020 Solomon et al.
10,653,413 B2 5/2020 Worthington et al.
10,653,417 B2 5/2020 Shelton, IV et al.
10,653,435 B2 5/2020 Shelton, IV et al.
10,660,640 B2 5/2020 Yates et al.
10,667,408 B2 5/2020 Sgroi, Jr. et al.
D888,953 S 6/2020 Baxter, III et al.
10,667,808 B2 6/2020 Baxter, III et al.
10,667,809 B2 6/2020 Bakos et al.
10,667,810 B2 6/2020 Shelton, IV et al.
10,667,811 B2 6/2020 Harris et al.
10,667,818 B2 6/2020 McLain et al.
10,674,895 B2 6/2020 Yeung et al.
10,675,021 B2 6/2020 Harris et al.
10,675,024 B2 6/2020 Shelton, IV et al.
10,675,025 B2 6/2020 Swayze et al.
10,675,026 B2 6/2020 Harris et al.
10,675,028 B2 6/2020 Shelton, IV et al.
10,675,035 B2 6/2020 Zingman
10,675,080 B2 6/2020 Woloszko et al.
10,675,102 B2 6/2020 Forgione et al.
10,677,035 B2 6/2020 Balan et al.
10,682,134 B2 6/2020 Shelton, IV et al.
10,682,136 B2 6/2020 Harris et al.

(56) **References Cited**

U.S. PATENT DOCUMENTS

10,682,137 B2 6/2020 Stokes et al.
10,682,138 B2 6/2020 Shelton, IV et al.
10,682,141 B2 6/2020 Moore et al.
10,682,142 B2 6/2020 Shelton, IV et al.
10,687,806 B2 6/2020 Shelton, IV et al.
10,687,809 B2 6/2020 Shelton, IV et al.
10,687,810 B2 6/2020 Shelton, IV et al.
10,687,812 B2 6/2020 Shelton, IV et al.
10,687,813 B2 6/2020 Shelton, IV et al.
10,687,817 B2 6/2020 Shelton, IV et al.
10,687,819 B2 6/2020 Stokes et al.
10,687,904 B2 6/2020 Harris et al.
10,695,053 B2 6/2020 Hess et al.
10,695,055 B2 6/2020 Shelton, IV et al.
10,695,057 B2 6/2020 Shelton, IV et al.
10,695,058 B2 6/2020 Lytle, IV et al.
10,695,062 B2 6/2020 Leimbach et al.
10,695,063 B2 6/2020 Morgan et al.
10,695,074 B2 6/2020 Carusillo
10,695,081 B2 6/2020 Shelton, IV et al.
10,695,119 B2 6/2020 Smith
10,695,123 B2 6/2020 Allen, IV
10,695,187 B2 6/2020 Moskowitz et al.
D890,784 S 7/2020 Shelton, IV et al.
10,702,266 B2 7/2020 Parihar et al.
10,702,267 B2 7/2020 Hess et al.
10,702,270 B2 7/2020 Shelton, IV et al.
10,702,271 B2 7/2020 Aranyi et al.
10,705,660 B2 7/2020 Xiao
10,709,446 B2 7/2020 Harris et al.
10,709,468 B2 7/2020 Shelton, IV et al.
10,709,469 B2 7/2020 Shelton, IV et al.
10,709,496 B2 7/2020 Moua et al.
10,716,563 B2 7/2020 Shelton, IV et al.
10,716,565 B2 7/2020 Shelton, IV et al.
10,716,568 B2 7/2020 Hall et al.
10,716,614 B2 7/2020 Yates et al.
10,717,179 B2 7/2020 Koenig et al.
10,722,232 B2 7/2020 Yates et al.
10,722,233 B2 7/2020 Wellman
10,722,292 B2 7/2020 Arya et al.
10,722,293 B2 7/2020 Arya et al.
10,722,317 B2 7/2020 Ward et al.
D893,717 S 8/2020 Messerly et al.
10,729,432 B2 8/2020 Shelton, IV et al.
10,729,434 B2 8/2020 Harris et al.
10,729,435 B2 8/2020 Richard
10,729,436 B2 8/2020 Shelton, IV et al.
10,729,443 B2 8/2020 Cabrera et al.
10,729,458 B2 8/2020 Stoddard et al.
10,729,501 B2 8/2020 Leimbach et al.
10,729,509 B2 8/2020 Shelton, IV et al.
10,736,616 B2 8/2020 Scheib et al.
10,736,628 B2 8/2020 Yates et al.
10,736,629 B2 8/2020 Shelton, IV et al.
10,736,630 B2 8/2020 Huang et al.
10,736,633 B2 8/2020 Vendely et al.
10,736,634 B2 8/2020 Shelton, IV et al.
10,736,636 B2 8/2020 Baxter, III et al.
10,736,644 B2 8/2020 Windolf et al.
10,736,702 B2 8/2020 Harris et al.
10,737,398 B2 8/2020 Remirez et al.
10,743,849 B2 8/2020 Shelton, IV et al.
10,743,850 B2 8/2020 Hibner et al.
10,743,851 B2 8 2020 Swayze et al.
10,743,868 B2 8/2020 Shelton, IV et al.
10,743,870 B2 8/2020 Hall et al.
10,743,872 B2 8/2020 Leimbach et al.
10,743,873 B2 8/2020 Overmyer et al.
10,743,874 B2 8/2020 Shelton, IV et al.
10,743,875 B2 8/2020 Shelton, IV et al.
10,743,877 B2 8/2020 Shelton, IV et al.
10,743,930 B2 8/2020 Nagtegaal
10,751,048 B2 8/2020 Whitman et al.
10,751,053 B2 8/2020 Harris et al.
10,751,076 B2 8/2020 Laurent et al.
10,751,138 B2 8/2020 Giordano et al.
10,758,229 B2 9/2020 Shelton, IV et al.
10,758,230 B2 9/2020 Shelton, IV et al.
10,758,232 B2 9/2020 Shelton, IV et al.
10,758,233 B2 9/2020 Scheib et al.
10,758,259 B2 9/2020 Demmy et al.
10,765,425 B2 9/2020 Yates et al.
10,765,427 B2 9/2020 Shelton, IV et al.
10,765,429 B2 9/2020 Leimbach et al.
10,765,430 B2 9/2020 Wixey
10,765,432 B2 9/2020 Moore et al.
10,765,442 B2 9/2020 Strobl
10,772,625 B2 9/2020 Shelton, IV et al.
10,772,628 B2 9/2020 Chen et al.
10,772,629 B2 9/2020 Shelton, IV et al.
10,772,630 B2 9/2020 Wixey
10,772,631 B2 9/2020 Zergiebel et al.
10,772,632 B2 9/2020 Kostrzewski
10,772,651 B2 9/2020 Shelton, IV et al.
10,779,818 B2 9/2020 Zemlok et al.
10,779,820 B2 9/2020 Harris et al.
10,779,821 B2 9/2020 Harris et al.
10,779,822 B2 9/2020 Yates et al.
10,779,823 B2 9/2020 Shelton, IV et al.
10,779,824 B2 9/2020 Shelton, IV et al.
10,779,825 B2 9/2020 Shelton, IV et al.
10,779,826 B2 9/2020 Shelton, IV et al.
10,779,903 B2 9/2020 Wise et al.
10,780,539 B2 9/2020 Shelton, IV et al.
10,786,248 B2 9/2020 Rousseau et al.
10,786,253 B2 9/2020 Shelton, IV et al.
10,786,255 B2 9/2020 Hodgkinson et al.
10,792,038 B2 10/2020 Becerra et al.
10,796,471 B2 10/2020 Leimbach et al.
10,799,240 B2 10/2020 Shelton, IV et al.
10,799,306 B2 10/2020 Robinson et al.
10,806,448 B2 10/2020 Shelton, IV et al.
10,806,449 B2 10/2020 Shelton, IV et al.
10,806,450 B2 10/2020 Yates et al.
10,806,451 B2 10/2020 Harris et al.
10,806,453 B2 10/2020 Chen et al.
10,806,479 B2 10/2020 Shelton, IV et al.
10,813,638 B2 10/2020 Shelton, IV et al.
10,813,639 B2 10/2020 Shelton, IV et al.
10,813,640 B2 10/2020 Adams et al.
10,813,641 B2 10/2020 Setser et al.
10,813,683 B2 10/2020 Baxter, III et al.
10,813,705 B2 10/2020 Hares et al.
10,813,710 B2 10/2020 Grubbs
10,820,939 B2 11/2020 Sartor
10,828,028 B2 11/2020 Harris et al.
10,828,030 B2 11/2020 Weir et al.
10,828,032 B2 11/2020 Leimbach et al.
10,828,033 B2 11/2020 Shelton, IV et al.
10,828,089 B2 11/2020 Clark et al.
10,835,245 B2 11/2020 Swayze et al.
10,835,246 B2 11/2020 Shelton, IV et al.
10,835,247 B2 11/2020 Shelton, IV et al.
10,835,249 B2 11/2020 Schellin et al.
10,835,251 B2 11/2020 Shelton, IV et al.
10,835,330 B2 11/2020 Shelton, IV et al.
10,842,357 B2 11/2020 Moskowitz et al.
10,842,473 B2 11/2020 Scheib et al.
10,842,488 B2 11/2020 Swayze et al.
10,842,489 B2 11/2020 Shelton, IV
10,842,490 B2 11/2020 DiNardo et al.
10,842,491 B2 11/2020 Shelton, IV et al.
10,842,492 B2 11/2020 Shelton, IV et al.
D904,612 S 12/2020 Wynn et al.
D904,613 S 12/2020 Wynn et al.
D906,355 S 12/2020 Messerly et al.
10,849,621 B2 12/2020 Whitfield et al.
10,849,623 B2 12/2020 Dunki-Jacobs et al.
10,849,697 B2 12/2020 Yates et al.
10,856,866 B2 12/2020 Shelton, IV et al.
10,856,867 B2 12/2020 Shelton, IV et al.
10,856,868 B2 12/2020 Shelton, IV et al.
10,856,869 B2 12/2020 Shelton, IV et al.

(56) **References Cited**

U.S. PATENT DOCUMENTS

10,856,870 B2 12/2020 Harris et al.
10,863,981 B2 12/2020 Overmyer et al.
10,863,984 B2 12/2020 Shelton, IV et al.
10,863,986 B2 12/2020 Yates et al.
10,869,663 B2 12/2020 Shelton, IV et al.
10,869,664 B2 12/2020 Shelton, IV
10,869,665 B2 12/2020 Shelton, IV et al.
10,869,666 B2 12/2020 Shelton, IV et al.
10,869,669 B2 12/2020 Shelton, IV et al.
10,874,290 B2 12/2020 Walen et al.
10,874,391 B2 12/2020 Shelton, IV et al.
10,874,392 B2 12/2020 Scirica et al.
10,874,393 B2 12/2020 Satti, III et al.
10,874,396 B2 12/2020 Moore et al.
10,874,399 B2 12/2020 Zhang
10,879,275 B2 12/2020 Li et al.
D907,647 S 1/2021 Siebel et al.
D907,648 S 1/2021 Siebel et al.
D908,216 S 1/2021 Messerly et al.
10,881,395 B2 1/2021 Merchant et al.
10,881,396 B2 1/2021 Shelton, IV et al.
10,881,399 B2 1/2021 Shelton, IV et al.
10,881,401 B2 1/2021 Baber et al.
10,881,446 B2 1/2021 Strobl
10,888,318 B2 1/2021 Parihar et al.
10,888,321 B2 1/2021 Shelton, IV et al.
10,888,322 B2 1/2021 Morgan et al.
10,888,323 B2 1/2021 Chen et al.
10,888,325 B2 1/2021 Harris et al.
10,888,328 B2 1/2021 Shelton, IV et al.
10,888,329 B2 1/2021 Moore et al.
10,888,330 B2 1/2021 Moore et al.
10,888,369 B2 1/2021 Messerly et al.
10,892,899 B2 1/2021 Shelton, IV et al.
10,893,853 B2 1/2021 Shelton, IV et al.
10,893,863 B2 1/2021 Shelton, IV et al.
10,893,864 B2 1/2021 Harris et al.
10,893,867 B2 1/2021 Leimbach et al.
10,898,183 B2 1/2021 Shelton, IV et al.
10,898,184 B2 1/2021 Yates et al.
10,898,185 B2 1/2021 Overmyer et al.
10,898,186 B2 1/2021 Bakos et al.
10,898,190 B2 1/2021 Yates et al.
10,898,193 B2 1/2021 Shelton, IV et al.
10,898,194 B2 1/2021 Moore et al.
10,898,195 B2 1/2021 Moore et al.
10,903,685 B2 1/2021 Yates et al.
D910,847 S 2/2021 Shelton, IV et al.
10,905,415 B2 2/2021 DiNardo et al.
10,905,418 B2 2/2021 Shelton, IV et al.
10,905,420 B2 2/2021 Jasemian et al.
10,905,422 B2 2/2021 Bakos et al.
10,905,423 B2 2/2021 Baber et al.
10,905,426 B2 2/2021 Moore et al.
10,905,427 B2 2/2021 Moore et al.
10,911,515 B2 2/2021 Biasi et al.
10,912,559 B2 2/2021 Harris et al.
10,912,562 B2 2/2021 Dunki-Jacobs et al.
10,912,575 B2 2/2021 Shelton, IV et al.
10,918,364 B2 2/2021 Applegate et al.
10,918,380 B2 2/2021 Morgan et al.
10,918,385 B2 2/2021 Overmyer et al.
10,918,386 B2 2/2021 Shelton, IV et al.
10,919,156 B2 2/2021 Roberts et al.
10,925,600 B2 2/2021 McCuen
10,925,605 B2 2/2021 Moore et al.
D914,878 S 3/2021 Shelton, IV et al.
10,932,772 B2 3/2021 Shelton, IV et al.
10,932,774 B2 3/2021 Shelton, IV
10,932,775 B2 3/2021 Shelton, IV et al.
10,932,778 B2 3/2021 Smith et al.
10,932,779 B2 3/2021 Vendely et al.
10,932,784 B2 3/2021 Mozdzierz et al.
10,932,804 B2 3/2021 Scheib et al.
10,932,806 B2 3/2021 Shelton, IV et al.
10,932,872 B2 3/2021 Shelton, IV et al.
10,944,728 B2 3/2021 Wiener et al.
10,945,727 B2 3/2021 Shelton, IV et al.
10,945,728 B2 3/2021 Morgan et al.
10,945,729 B2 3/2021 Shelton, IV et al.
10,945,731 B2 3/2021 Baxter, III et al.
10,952,708 B2 3/2021 Scheib et al.
10,952,726 B2 3/2021 Chowaniec
10,952,727 B2 3/2021 Giordano et al.
10,952,728 B2 3/2021 Shelton, IV et al.
10,952,759 B2 3/2021 Messerly et al.
10,952,767 B2 3/2021 Kostrzewski et al.
10,959,722 B2 3/2021 Morgan et al.
10,959,725 B2 3/2021 Kerr et al.
10,959,726 B2 3/2021 Williams et al.
10,959,727 B2 3/2021 Hunter et al.
10,959,731 B2 3/2021 Casasanta, Jr. et al.
10,959,744 B2 3/2021 Shelton, IV et al.
10,959,797 B2 3/2021 Licht et al.
D917,500 S 4/2021 Siebel et al.
10,966,627 B2 4/2021 Shelton, IV et al.
10,966,717 B2 4/2021 Shah et al.
10,966,718 B2 4/2021 Shelton, IV et al.
10,966,791 B2 4/2021 Harris et al.
10,973,515 B2 4/2021 Harris et al.
10,973,516 B2 4/2021 Shelton, IV et al.
10,973,517 B2 4/2021 Wixey
10,973,519 B2 4/2021 Weir et al.
10,973,520 B2 4/2021 Shelton, IV et al.
10,980,534 B2 4/2021 Yates et al.
10,980,535 B2 4/2021 Yates et al.
10,980,536 B2 4/2021 Weaner et al.
10,980,537 B2 4/2021 Shelton, IV et al.
10,980,538 B2 4/2021 Nalagatla et al.
10,980,539 B2 4/2021 Harris et al.
10,980,560 B2 4/2021 Shelton, IV et al.
10,983,646 B2 4/2021 Yoon et al.
10,987,102 B2 4/2021 Gonzalez et al.
10,987,178 B2 4/2021 Shelton, IV et al.
10,993,713 B2 5/2021 Shelton, IV et al.
10,993,715 B2 5/2021 Shelton, IV et al.
10,993,716 B2 5/2021 Shelton, IV et al.
10,993,717 B2 5/2021 Shelton, IV et al.
11,000,274 B2 5/2021 Shelton, IV et al.
11,000,275 B2 5/2021 Shelton, IV et al.
11,000,277 B2 5/2021 Giordano et al.
11,000,278 B2 5/2021 Shelton, IV et al.
11,000,279 B2 5/2021 Shelton, IV et al.
11,005,291 B2 5/2021 Calderoni
11,006,951 B2 5/2021 Giordano et al.
11,006,955 B2 5/2021 Shelton, IV et al.
11,007,004 B2 5/2021 Shelton, IV et al.
11,007,022 B2 5/2021 Shelton, IV et al.
11,013,511 B2 5/2021 Huang et al.
11,013,552 B2 5/2021 Widenhouse et al.
11,013,563 B2 5/2021 Shelton, IV et al.
11,020,016 B2 6/2021 Wallace et al.
11,020,112 B2 6/2021 Shelton, IV et al.
11,020,113 B2 6/2021 Shelton, IV et al.
11,020,114 B2 6/2021 Shelton, IV et al.
11,020,115 B2 6/2021 Scheib et al.
11,026,678 B2 6/2021 Overmyer et al.
11,026,680 B2 6/2021 Shelton, IV et al.
11,026,684 B2 6/2021 Shelton, IV et al.
11,026,687 B2 6/2021 Shelton, IV et al.
11,026,712 B2 6/2021 Shelton, IV et al.
11,026,713 B2 6/2021 Stokes et al.
11,026,751 B2 6/2021 Shelton, IV et al.
11,033,267 B2 6/2021 Shelton, IV et al.
11,039,834 B2 6/2021 Harris et al.
11,039,836 B2 6/2021 Shelton, IV et al.
11,039,837 B2 6/2021 Shelton, IV et al.
11,039,849 B2 6/2021 Bucciaglia et al.
11,045,189 B2 6/2021 Yates et al.
11,045,191 B2 6/2021 Shelton, IV et al.
11,045,192 B2 6/2021 Harris et al.
11,045,196 B2 6/2021 Olson et al.
11,045,197 B2 6/2021 Shelton, IV et al.
11,045,199 B2 6/2021 Mozdzierz et al.

(56) **References Cited**

U.S. PATENT DOCUMENTS

11,045,270 B2 6/2021 Shelton, IV et al.
11,051,807 B2 7/2021 Shelton, IV et al.
11,051,810 B2 7/2021 Harris et al.
11,051,811 B2 7/2021 Shelton, IV et al.
11,051,813 B2 7/2021 Shelton, IV et al.
11,051,836 B2 7/2021 Shelton, IV et al.
11,051,840 B2 7/2021 Shelton, IV et al.
11,051,873 B2 7/2021 Wiener et al.
11,058,418 B2 7/2021 Shelton, IV et al.
11,058,420 B2 7/2021 Shelton, IV et al.
11,058,422 B2 7/2021 Harris et al.
11,058,423 B2 7/2021 Shelton, IV et al.
11,058,424 B2 7/2021 Shelton, IV et al.
11,058,425 B2 7/2021 Widenhouse et al.
11,058,426 B2 7/2021 Nalagatla et al.
11,058,498 B2 7/2021 Shelton, IV et al.
11,064,997 B2 7/2021 Shelton, IV et al.
11,064,998 B2 7/2021 Shelton, IV
11,065,048 B2 7/2021 Messerly et al.
11,069,012 B2 7/2021 Shelton, IV et al.
11,071,542 B2 7/2021 Chen et al.
11,071,543 B2 7/2021 Shelton, IV et al.
11,071,545 B2 7/2021 Baber et al.
11,071,554 B2 7/2021 Parfett et al.
11,071,560 B2 7/2021 Deck et al.
11,076,853 B2 8/2021 Parfett et al.
11,076,854 B2 8/2021 Baber et al.
11,076,921 B2 8/2021 Shelton, IV et al.
11,076,929 B2 8/2021 Shelton, IV et al.
11,083,452 B2 8/2021 Schmid et al.
11,083,453 B2 8/2021 Shelton, IV et al.
11,083,454 B2 8/2021 Harris et al.
11,083,455 B2 8/2021 Shelton, IV et al.
11,083,456 B2 8/2021 Shelton, IV et al.
11,083,457 B2 8/2021 Shelton, IV et al.
11,083,458 B2 8/2021 Harris et al.
11,090,045 B2 8/2021 Shelton, IV
11,090,046 B2 8/2021 Shelton, IV et al.
11,090,047 B2 8/2021 Shelton, IV et al.
11,090,048 B2 8/2021 Fanelli et al.
11,090,049 B2 8/2021 Bakos et al.
11,090,075 B2 8/2021 Hunter et al.
11,096,688 B2 8/2021 Shelton, IV et al.
11,096,689 B2 8/2021 Overmyer et al.
11,100,631 B2 8/2021 Yates et al.
11,103,241 B2 8/2021 Yates et al.
11,103,248 B2 8/2021 Shelton, IV et al.
11,103,268 B2 8/2021 Shelton, IV et al.
11,103,269 B2 8/2021 Shelton, IV et al.
11,109,858 B2 9/2021 Shelton, IV et al.
11,109,859 B2 9/2021 Overmyer et al.
11,109,860 B2 9/2021 Shelton, IV et al.
11,109,866 B2 9/2021 Shelton, IV et al.
11,109,878 B2 9/2021 Shelton, IV et al.
11,109,925 B2 9/2021 Cooper et al.
11,116,485 B2 9/2021 Scheib et al.
11,116,502 B2 9/2021 Shelton, IV et al.
11,116,594 B2 9/2021 Beardsley
11,123,069 B2 9/2021 Baxter, III et al.
11,123,070 B2 9/2021 Shelton, IV et al.
11,129,611 B2 9/2021 Shelton, IV et al.
11,129,613 B2 9/2021 Harris et al.
11,129,615 B2 9/2021 Scheib et al.
11,129,616 B2 9/2021 Shelton, IV et al.
11,129,634 B2 9/2021 Scheib et al.
11,129,636 B2 9/2021 Shelton, IV et al.
11,129,666 B2 9/2021 Messerly et al.
11,129,680 B2 9/2021 Shelton, IV et al.
11,132,462 B2 9/2021 Shelton, IV et al.
11,133,106 B2 9/2021 Shelton, IV et al.
11,134,938 B2 10/2021 Timm et al.
11,134,940 B2 10/2021 Shelton, IV et al.
11,134,942 B2 10/2021 Harris et al.
11,134,943 B2 10/2021 Giordano et al.
11,134,944 B2 10/2021 Wise et al.
11,134,947 B2 10/2021 Shelton, IV et al.
11,135,352 B2 10/2021 Shelton, IV et al.
11,141,153 B2 10/2021 Shelton, IV et al.
11,141,154 B2 10/2021 Shelton, IV et al.
11,141,155 B2 10/2021 Shelton, IV
11,141,156 B2 10/2021 Shelton, IV
11,141,159 B2 10/2021 Scheib et al.
11,141,160 B2 10/2021 Shelton, IV et al.
11,147,547 B2 10/2021 Shelton, IV et al.
11,147,549 B2 10/2021 Timm et al.
11,147,551 B2 10/2021 Shelton, IV
11,147,553 B2 10/2021 Shelton, IV
11,147,554 B2 10/2021 Aronhalt et al.
11,154,296 B2 10/2021 Aronhalt et al.
11,154,297 B2 10/2021 Swayze et al.
11,154,298 B2 10/2021 Timm et al.
11,154,299 B2 10/2021 Shelton, IV et al.
11,154,300 B2 10/2021 Nalagatla et al.
11,154,301 B2 10/2021 Beckman et al.
11,160,551 B2 11/2021 Shelton, IV et al.
11,160,553 B2 11/2021 Simms et al.
11,160,601 B2 11/2021 Worrell et al.
11,166,716 B2 11/2021 Shelton, IV et al.
11,166,717 B2 11/2021 Shelton, IV et al.
11,166,720 B2 11/2021 Giordano et al.
11,166,772 B2 11/2021 Shelton, IV et al.
11,166,773 B2 11/2021 Ragosta et al.
11,172,580 B2 11/2021 Gaertner, II
11,172,927 B2 11/2021 Shelton, IV
11,172,929 B2 11/2021 Shelton, IV
11,179,150 B2 11/2021 Yates et al.
11,179,151 B2 11/2021 Shelton, IV et al.
11,179,152 B2 11/2021 Morgan et al.
11,179,153 B2 11/2021 Shelton, IV
11,179,155 B2 11/2021 Shelton, IV et al.
11,179,208 B2 11/2021 Yates et al.
11,185,325 B2 11/2021 Shelton, IV et al.
11,185,330 B2 11/2021 Huitema et al.
11,191,539 B2 12/2021 Overmyer et al.
11,191,540 B2 12/2021 Aronhalt et al.
11,191,543 B2 12/2021 Overmyer et al.
11,191,545 B2 12/2021 Vendely et al.
11,197,668 B2 12/2021 Shelton, IV et al.
11,197,670 B2 12/2021 Shelton, IV et al.
11,197,671 B2 12/2021 Shelton, IV et al.
11,197,672 B2 12/2021 Dunki-Jacobs et al.
11,202,570 B2 12/2021 Shelton, IV et al.
11,202,631 B2 12/2021 Shelton, IV et al.
11,202,633 B2 12/2021 Harris et al.
11,207,064 B2 12/2021 Shelton, IV et al.
11,207,065 B2 12/2021 Harris et al.
11,207,067 B2 12/2021 Shelton, IV et al.
11,207,089 B2 12/2021 Kostrzewski et al.
11,207,090 B2 12/2021 Shelton, IV et al.
11,207,146 B2 12/2021 Shelton, IV et al.
11,213,293 B2 1/2022 Worthington et al.
11,213,294 B2 1/2022 Shelton, IV et al.
11,213,302 B2 1/2022 Parfett et al.
11,213,359 B2 1/2022 Shelton, IV et al.
11,219,453 B2 1/2022 Shelton, IV et al.
11,219,455 B2 1/2022 Shelton, IV et al.
11,224,423 B2 1/2022 Shelton, IV et al.
11,224,426 B2 1/2022 Shelton, IV et al.
11,224,427 B2 1/2022 Shelton, IV et al.
11,224,428 B2 1/2022 Scott et al.
11,224,454 B2 1/2022 Shelton, IV et al.
11,224,497 B2 1/2022 Shelton, IV et al.
11,229,436 B2 1/2022 Shelton, IV et al.
11,229,437 B2 1/2022 Shelton, IV et al.
11,234,698 B2 2/2022 Shelton, IV et al.
11,234,700 B2 2/2022 Ragosta et al.
11,241,229 B2 2/2022 Shelton, IV et al.
11,241,230 B2 2/2022 Shelton, IV et al.
11,241,235 B2 2/2022 Shelton, IV et al.
11,246,590 B2 2/2022 Swayze et al.
11,246,592 B2 2/2022 Shelton, IV et al.
11,246,616 B2 2/2022 Shelton, IV et al.
11,246,618 B2 2/2022 Hall et al.
11,246,678 B2 2/2022 Shelton, IV et al.

(56) **References Cited**

U.S. PATENT DOCUMENTS

11,253,254 B2 2/2022 Kimball et al.
11,253,256 B2 2/2022 Harris et al.
11,259,799 B2 3/2022 Overmyer et al.
11,259,803 B2 3/2022 Shelton, IV et al.
11,259,805 B2 3/2022 Shelton, IV et al.
11,259,806 B2 3/2022 Shelton, IV et al.
11,259,807 B2 3/2022 Shelton, IV et al.
11,266,405 B2 3/2022 Shelton, IV et al.
11,266,406 B2 3/2022 Leimbach et al.
11,266,409 B2 3/2022 Huitema et al.
11,266,410 B2 3/2022 Shelton, IV et al.
11,266,468 B2 3/2022 Shelton, IV et al.
11,272,927 B2 3/2022 Swayze et al.
11,272,928 B2 3/2022 Shelton, IV
11,272,931 B2 3/2022 Boudreaux et al.
11,272,938 B2 3/2022 Shelton, IV et al.
11,278,279 B2 3/2022 Morgan et al.
11,278,280 B2 3/2022 Shelton, IV et al.
11,278,284 B2 3/2022 Shelton, IV et al.
11,284,890 B2 3/2022 Nalagatla et al.
11,284,891 B2 3/2022 Shelton, IV et al.
11,284,898 B2 3/2022 Baxter, III et al.
11,284,953 B2 3/2022 Shelton, IV et al.
11,291,440 B2 4/2022 Harris et al.
11,291,441 B2 4/2022 Giordano et al.
11,291,443 B2 4/2022 Viola et al.
11,291,444 B2 4/2022 Boudreaux et al.
11,291,445 B2 4/2022 Shelton, IV et al.
11,291,447 B2 4/2022 Shelton, IV et al.
11,291,449 B2 4/2022 Swensgard et al.
11,291,451 B2 4/2022 Shelton, IV
11,291,465 B2 4/2022 Parihar et al.
11,291,510 B2 4/2022 Shelton, IV et al.
11,298,125 B2 4/2022 Ming et al.
11,298,127 B2 4/2022 Shelton, IV
11,298,128 B2 4/2022 Messerly et al.
11,298,129 B2 4/2022 Bakos et al.
11,298,130 B2 4/2022 Bakos et al.
11,298,132 B2 4/2022 Shelton, IV et al.
11,298,134 B2 4/2022 Huitema et al.
11,304,695 B2 4/2022 Shelton, IV et al.
11,304,696 B2 4/2022 Shelton, IV et al.
11,304,697 B2 4/2022 Fanelli et al.
11,304,699 B2 4/2022 Shelton, IV et al.
11,304,704 B2 4/2022 Thomas et al.
11,311,290 B2 4/2022 Shelton, IV et al.
11,311,292 B2 4/2022 Shelton, IV et al.
11,311,294 B2 4/2022 Swayze et al.
11,311,295 B2 4/2022 Winoardner et al.
11,311,342 B2 4/2022 Parihar et al.
D950,728 S 5/2022 Bakos et al.
D952,144 S 5/2022 Boudreaux
11,317,910 B2 5/2022 Miller et al.
11,317,912 B2 5/2022 Jenkins et al.
11,317,913 B2 5/2022 Shelton, IV et al.
11,317,915 B2 5/2022 Boudreaux et al.
11,317,917 B2 5/2022 Shelton, IV et al.
11,317,919 B2 5/2022 Shelton, IV et al.
11,317,978 B2 5/2022 Cameron et al.
11,324,501 B2 5/2022 Shelton, IV et al.
11,324,503 B2 5/2022 Shelton, IV et al.
11,324,506 B2 5/2022 Beckman et al.
11,324,557 B2 5/2022 Shelton, IV et al.
11,331,100 B2 5/2022 Boudreaux et al.
11,331,101 B2 5/2022 Harris et al.
11,337,691 B2 5/2022 Widenhouse et al.
11,337,693 B2 5/2022 Hess et al.
11,337,698 B2 5/2022 Baxter, III et al.
11,344,299 B2 5/2022 Yates et al.
11,344,303 B2 5/2022 Shelton, IV et al.
11,350,843 B2 6/2022 Shelton, IV et al.
11,350,916 B2 6/2022 Shelton, IV et al.
11,350,928 B2 6/2022 Shelton, IV et al.
11,350,929 B2 6/2022 Giordano et al.
11,350,932 B2 6/2022 Shelton, IV et al.
11,350,934 B2 6/2022 Bakos et al.
11,350,935 B2 6/2022 Shelton, IV et al.
11,350,938 B2 6/2022 Shelton, IV et al.
11,357,503 B2 6/2022 Bakos et al.
11,361,176 B2 6/2022 Shelton, IV et al.
11,364,027 B2 6/2022 Harris et al.
11,364,046 B2 6/2022 Shelton, IV et al.
11,369,368 B2 6/2022 Shelton, IV et al.
11,369,376 B2 6/2022 Simms et al.
11,369,377 B2 6/2022 Boudreaux et al.
11,373,755 B2 6/2022 Shelton, IV et al.
11,376,001 B2 7/2022 Shelton, IV et al.
11,376,082 B2 7/2022 Shelton, IV et al.
11,376,098 B2 7/2022 Shelton, IV et al.
11,382,625 B2 7/2022 Huitema et al.
11,382,626 B2 7/2022 Shelton, IV et al.
11,382,627 B2 7/2022 Huitema et al.
11,382,628 B2 7/2022 Baxter, III et al.
11,382,638 B2 7/2022 Harris et al.
11,382,697 B2 7/2022 Shelton, IV et al.
11,389,160 B2 7/2022 Shelton, IV et al.
11,389,161 B2 7/2022 Shelton, IV et al.
11,389,162 B2 7/2022 Baber et al.
11,389,164 B2 7/2022 Yates et al.
11,395,651 B2 7/2022 Shelton, IV et al.
11,395,652 B2 7/2022 Parihar et al.
11,399,828 B2 8/2022 Swayze et al.
11,399,829 B2 8/2022 Leimbach et al.
11,399,831 B2 8/2022 Overmyer et al.
11,399,837 B2 8/2022 Shelton, IV et al.
11,406,377 B2 8/2022 Schmid et al.
11,406,378 B2 8/2022 Baxter, III et al.
11,406,380 B2 8/2022 Yates et al.
11,406,382 B2 8/2022 Shelton, IV et al.
11,406,390 B2 8/2022 Shelton, IV et al.
11,406,442 B2 8/2022 Davison et al.
11,410,259 B2 8/2022 Harris et al.
11,413,041 B2 8/2022 Viola et al.
D964,564 S 9/2022 Boudreaux
11,439,391 B2 9/2022 Bruns et al.
11,452,526 B2 9/2022 Ross et al.
D966,512 S 10/2022 Shelton, IV et al.
D967,421 S 10/2022 Shelton, IV et al.
D971,232 S 11/2022 Siebel et al.
11,484,309 B2 11/2022 Harris et al.
11,484,312 B2 11/2022 Shelton, IV et al.
11,523,859 B2 12/2022 Shelton, IV et al.
D974,560 S 1/2023 Shelton, IV et al.
D975,278 S 1/2023 Shelton, IV et al.
D975,850 S 1/2023 Shelton, IV et al.
D975,851 S 1/2023 Shelton, IV et al.
D976,401 S 1/2023 Shelton, IV et al.
D980,425 S 3/2023 Baxter, III
2001/0000531 A1 4/2001 Casscells et al.
2001/0025183 A1 9/2001 Shahidi
2001/0025184 A1 9/2001 Messerly
2001/0030219 A1 10/2001 Green et al.
2001/0034530 A1 10/2001 Malackowski et al.
2001/0045442 A1 11/2001 Whitman
2002/0014510 A1 2/2002 Richter et al.
2002/0022810 A1 2/2002 Urich
2002/0022836 A1 2/2002 Goble et al.
2002/0022861 A1 2/2002 Jacobs et al.
2002/0023126 A1 2/2002 Flavin
2002/0029032 A1 3/2002 Arkin
2002/0029036 A1 3/2002 Goble et al.
2002/0042620 A1 4/2002 Julian et al.
2002/0045905 A1 4/2002 Gerbi et al.
2002/0054158 A1 5/2002 Asami
2002/0065535 A1 5/2002 Kneifel et al.
2002/0066764 A1 6/2002 Perry et al.
2002/0077660 A1 6/2002 Kayan et al.
2002/0082612 A1 6/2002 Moll et al.
2002/0087048 A1 7/2002 Brock et al.
2002/0087148 A1 7/2002 Brock et al.
2002/0091374 A1 7/2002 Cooper
2002/0095175 A1 7/2002 Brock et al.
2002/0103494 A1 8/2002 Pacey
2002/0111621 A1 8/2002 Wallace et al.

(56) **References Cited**

U.S. PATENT DOCUMENTS

2002/0111624 A1 8/2002 Witt et al.
2002 0116063 A1 8/2002 Giannetti et al.
2002/0117533 A1 8/2002 Milliman et al.
2002 0117534 A1 8/2002 Green et al.
2002 0127265 A1 9/2002 Bowman et al.
2002 0128633 A1 9/2002 Brock et al.
2002 0133236 A1 9/2002 Rousseau
2002/0134811 A1 9/2002 Napier et al.
2002/0135474 A1 9/2002 Sylliassen
2002 0138086 A1 9/2002 Sixto et al.
2002 0143340 A1 10/2002 Kaneko
2002 0151770 A1 10/2002 Noll et al.
2002/0158593 A1 10/2002 Henderson et al.
2002 0161277 A1 10/2002 Boone et al.
2002/0177848 A1 11/2002 Truckai et al.
2002/0185514 A1 12/2002 Adams et al.
2002/0188170 A1 12/2002 Santamore et al.
2002 0188287 A1 12/2002 Zvuloni et al.
2003 0009193 A1 1/2003 Corsaro
2003 0011245 A1 1/2003 Fiebig
2003 0012805 A1 1/2003 Chen et al.
2003 0018323 A1 1/2003 Wallace et al.
2003 0028236 A1 2/2003 Gillick et al.
2003 0040670 A1 2/2003 Govari
2003 0045835 A1 3/2003 Anderson et al.
2003 0047230 A1 3/2003 Kim
2003 0047582 A1 3/2003 Sonnenschein et al.
2003 0050628 A1 3/2003 Whitman et al.
2003 0050654 A1 3/2003 Whitman et al.
2003/0066858 A1 4/2003 Holgersson
2003 0078647 A1 4/2003 Vallana et al.
2003/0083648 A1 5/2003 Wang et al.
2003 0084983 A1 5/2003 Rangachari et al.
2003 0093103 A1 5/2003 Malackowski et al.
2003 0093160 A1 5/2003 Maksimovic et al.
2003 0094356 A1 5/2003 Waldron
2003 0096158 A1 5/2003 Takano et al.
2003/0105475 A1 6/2003 Sancoff et al.
2003 0114851 A1 6/2003 Truckai et al.
2003 0121586 A1 7/2003 Mitra et al.
2003 0135204 A1 7/2003 Lee et al.
2003/0135388 A1 7/2003 Martucci et al.
2003/0139741 A1 7/2003 Goble et al.
2003/0144660 A1 7/2003 Mollenauer
2003 0149406 A1 8/2003 Martineau et al.
2003 0153908 A1 8/2003 Goble et al.
2003/0153968 A1 8/2003 Geis et al.
2003 0158463 A1 8/2003 Julian et al.
2003/0163029 A1 8/2003 Sonnenschein et al.
2003 0163085 A1 8/2003 Tanner et al.
2003 0164172 A1 9/2003 Chumas et al.
2003 0181800 A1 9/2003 Bonutti
2003/0181900 A1 9/2003 Long
2003/0190584 A1 10/2003 Heasley
2003/0195387 A1 10/2003 Kortenbach et al.
2003/0205029 A1 11/2003 Chapolini et al.
2003 0212005 A1 11/2003 Petito et al.
2003 0216619 A1 11/2003 Scirica et al.
2003/0216732 A1 11/2003 Truckai et al.
2003 0236505 A1 12/2003 Bonadio et al.
2004 0006335 A1 1/2004 Garrison
2004 0006340 A1 1/2004 Latterell et al.
2004 0007608 A1 1/2004 Ehrenfels et al.
2004 0024457 A1 2/2004 Boyce et al.
2004 0028502 A1 2/2004 Cummins
2004 0030333 A1 2/2004 Goble
2004 0034287 A1 2/2004 Hickle
2004 0034357 A1 2/2004 Beane et al.
2004 0044295 A1 3/2004 Reinert et al.
2004 0044364 A1 3/2004 DeVries et al.
2004 0049121 A1 3/2004 Yaron
2004 0049172 A1 3/2004 Root et al.
2004 0059362 A1 3/2004 Knodel et al.
2004 0068161 A1 4/2004 Couvillon
2004 0068224 A1 4/2004 Couvillon et al.
2004/0068307 A1 4/2004 Goble
2004/0070369 A1 4/2004 Sakakibara
2004/0073222 A1 4/2004 Koseki
2004/0078037 A1 4/2004 Batchelor et al.
2004/0082952 A1 4/2004 Dycus et al.
2004/0085180 A1 5/2004 Juang
2004/0092992 A1 5/2004 Adams et al.
2004/0093020 A1 5/2004 Sinton
2004/0093024 A1 5/2004 Lousararian et al.
2004/0098040 A1 5/2004 Taniguchi et al.
2004/0101822 A1 5/2004 Wiesner et al.
2004/0102783 A1 5/2004 Sutterlin et al.
2004/0108357 A1 6/2004 Milliman et al.
2004/0110439 A1 6/2004 Chaikof et al.
2004/0115022 A1 6/2004 Albertson et al.
2004/0116952 A1 6/2004 Sakurai et al.
2004/0119185 A1 6/2004 Chen
2004/0122419 A1 6/2004 Neuberger
2004/0122423 A1 6/2004 Dycus et al.
2004/0133095 A1 7/2004 Dunki-Jacobs et al.
2004/0133189 A1 7/2004 Sakurai
2004/0143297 A1 7/2004 Ramsey
2004/0147909 A1 7/2004 Johnston et al.
2004/0153100 A1 8/2004 Ahlberg et al.
2004/0158261 A1 8/2004 Vu
2004/0164123 A1 8/2004 Racenet et al.
2004/0166169 A1 8/2004 Malaviya et al.
2004/0167572 A1 8/2004 Roth et al.
2004/0181219 A1 9/2004 Goble et al.
2004/0193189 A1 9/2004 Kortenbach et al.
2004/0197367 A1 10/2004 Rezania et al.
2004/0199181 A1 10/2004 Knodel et al.
2004/0204735 A1 10/2004 Shiroff et al.
2004/0218451 A1 11/2004 Said et al.
2004/0222268 A1 11/2004 Bilotti et al.
2004/0225186 A1 11/2004 Horne et al.
2004/0231870 A1 11/2004 McCormick et al.
2004/0232201 A1 11/2004 Wenchell et al.
2004/0236352 A1 11/2004 Wang et al.
2004/0239582 A1 12/2004 Seymour
2004/0243147 A1 12/2004 Lipow
2004/0243151 A1 12/2004 Demmy et al.
2004/0243163 A1 12/2004 Casiano et al.
2004/0247415 A1 12/2004 Mangone
2004/0249366 A1 12/2004 Kunz
2004/0254455 A1 12/2004 Iddan
2004/0254566 A1 12/2004 Plicchi et al.
2004/0254590 A1 12/2004 Hoffman et al.
2004/0254680 A1 12/2004 Sunaoshi
2004/0260315 A1 12/2004 Dell et al.
2004/0267310 A1 12/2004 Racenet et al.
2005/0010158 A1 1/2005 Brugger et al.
2005/0010213 A1 1/2005 Stad et al.
2005/0021078 A1 1/2005 Vleugels et al.
2005/0023325 A1 2/2005 Gresham et al.
2005/0032511 A1 2/2005 Malone et al.
2005/0033352 A1 2/2005 Zepf et al.
2005/0044489 A1 2/2005 Yamagami et al.
2005/0051163 A1 3/2005 Deem et al.
2005/0054946 A1 3/2005 Krzyzanowski
2005/0057225 A1 3/2005 Marquet
2005/0058890 A1 3/2005 Brazell et al.
2005/0059997 A1 3/2005 Bauman et al.
2005/0067548 A1 3/2005 Inoue
2005/0070929 A1 3/2005 Dalessandro et al.
2005/0075561 A1 4/2005 Golden
2005/0079088 A1 4/2005 Wirth et al.
2005/0080342 A1 4/2005 Gilreath et al.
2005/0085693 A1 4/2005 Belson et al.
2005/0085838 A1 4/2005 Thompson et al.
2005/0090709 A1 4/2005 Okada et al.
2005/0090817 A1 4/2005 Phan
2005/0096683 A1 5/2005 Ellins et al.
2005/0116673 A1 6/2005 Carl et al.
2005/0119524 A1 6/2005 Sekine et al.
2005/0120836 A1 6/2005 Anderson
2005/0124855 A1 6/2005 Jaffe et al.
2005/0125028 A1 6/2005 Looper et al.
2005/0125897 A1 6/2005 Wyslucha et al.

(56) **References Cited**

U.S. PATENT DOCUMENTS

2005 0129735 A1 6/2005 Cook et al.
2005/0130682 A1 6/2005 Takara et al.
2005/0131173 A1 6/2005 McDaniel et al.
2005/0131211 A1 6/2005 Bayley et al.
2005/0131390 A1 6/2005 Heinrich et al.
2005 0131436 A1 6/2005 Johnston et al.
2005/0131457 A1 6/2005 Douglas et al.
2005 0137454 A1 6/2005 Saadat et al.
2005 0137455 A1 6/2005 Ewers et al.
2005/0139636 A1 6/2005 Schwemberger et al.
2005/0143759 A1 6/2005 Kelly
2005 0143769 A1 6/2005 White et al.
2005/0145671 A1 7/2005 Viola
2005/0145672 A1 7/2005 Schwemberger et al.
2005/0150928 A1 7/2005 Kameyama et al.
2005/0154258 A1 7/2005 Tartaglia et al.
2005/0154406 A1 7/2005 Bombard et al.
2005 0159778 A1 7/2005 Heinrich et al.
2005 0165419 A1 7/2005 Sauer et al.
2005/0169974 A1 8/2005 Tenerz et al.
2005/0171522 A1 8/2005 Christopherson
2005/0177176 A1 8/2005 Gerbi et al.
2005/0177181 A1 8/2005 Kagan et al.
2005 0177249 A1 8/2005 Kladakis et al.
2005 0182298 A1 8/2005 Ikeda et al.
2005 0182443 A1 8/2005 Jonn et al.
2005/0184121 A1 8/2005 Heinrich
2005 0186240 A1 8/2005 Ringeisen et al.
2005 0187545 A1 8/2005 Hooven et al.
2005 0191936 A1 9/2005 Marine et al.
2005/0197859 A1 9/2005 Wilson et al.
2005 0203550 A1 9/2005 Laufer et al.
2005 0209614 A1 9/2005 Fenter et al.
2005 0216055 A1 9/2005 Scirica et al.
2005 0222587 A1 10/2005 Jinno et al.
2005/0222611 A1 10/2005 Weitkamp
2005/0222616 A1 10/2005 Rethy et al.
2005/0222665 A1 10/2005 Aranyi
2005/0228224 A1 10/2005 Okada et al.
2005 0228446 A1 10/2005 Mooradian et al.
2005 0230453 A1 10/2005 Viola
2005/0240178 A1 10/2005 Morley et al.
2005/0242950 A1 11/2005 Lindsay et al.
2005/0245965 A1 11/2005 Orban, III et al.
2005/0246881 A1 11/2005 Kelly et al.
2005 0251063 A1 11/2005 Basude
2005/0256452 A1 11/2005 DeMarchi et al.
2005/0256546 A1 11/2005 Vaisnys et al.
2005/0258963 A1 11/2005 Rodriguez et al.
2005 0261676 A1 11/2005 Hall et al.
2005 0263563 A1 12/2005 Racenet et al.
2005 0267455 A1 12/2005 Eggers et al.
2005/0267464 A1 12/2005 Truckai et al.
2005 0267529 A1 12/2005 Crockett et al.
2005/0274034 A1 12/2005 Hayashida et al.
2005 0283188 A1 12/2005 Loshakove et al.
2005 0283226 A1 12/2005 Haverkost
2006/0008787 A1 1/2006 Hayman et al.
2006 0011698 A1 1/2006 Okada et al.
2006 0015009 A1 1/2006 Jaffe et al.
2006 0020167 A1 1/2006 Sitzmann
2006 0020258 A1 1/2006 Strauss et al.
2006 0020272 A1 1/2006 Gildenberg
2006 0020336 A1 1/2006 Liddicoat
2006 0025812 A1 2/2006 Shelton
2006 0041188 A1 2/2006 Dirusso et al.
2006 0047275 A1 3/2006 Goble
2006 0049229 A1 3/2006 Milliman et al.
2006 0052824 A1 3/2006 Ransick et al.
2006 0052825 A1 3/2006 Ransick et al.
2006 0064086 A1 3/2006 Odom
2006 0079735 A1 4/2006 Martone et al.
2006 0079874 A1 4/2006 Faller et al.
2006 0079879 A1 4/2006 Faller et al.
2006 0086032 A1 4/2006 Valencic et al.
2006/0087746 A1 4/2006 Lipow
2006/0089535 A1 4/2006 Raz et al.
2006/0097699 A1 5/2006 Kamenoff
2006/0100643 A1 5/2006 Laufer et al.
2006/0100649 A1 5/2006 Hart
2006/0106369 A1 5/2006 Desai et al.
2006/0111711 A1 5/2006 Goble
2006/0111723 A1 5/2006 Chapolini et al.
2006/0116634 A1 6/2006 Shachar
2006/0142656 A1 6/2006 Malackowski et al.
2006/0142772 A1 6/2006 Ralph et al.
2006/0144898 A1 7/2006 Bilotti et al.
2006/0154546 A1 7/2006 Murphy et al.
2006/0161050 A1 7/2006 Butler et al.
2006/0161185 A1 7/2006 Saadat et al.
2006/0167471 A1 7/2006 Phillips
2006/0173290 A1 8/2006 Lavallee et al.
2006/0173470 A1 8/2006 Oray et al.
2006/0176031 A1 8/2006 Forman et al.
2006/0176242 A1 8/2006 Jaramaz et al.
2006/0178556 A1 8/2006 Hasser et al.
2006/0180633 A1 8/2006 Emmons
2006/0180634 A1 8/2006 Shelton et al.
2006/0185682 A1 8/2006 Marczyk
2006/0199999 A1 9/2006 Ikeda et al.
2006/0201989 A1 9/2006 Ojeda
2006/0206100 A1 9/2006 Eskridge et al.
2006/0217729 A1 9/2006 Eskridge et al.
2006/0226196 A1 10/2006 Hueil et al.
2006/0226957 A1 10/2006 Miller et al.
2006/0235368 A1 10/2006 Oz
2006/0241666 A1 10/2006 Briggs et al.
2006/0241691 A1 10/2006 Wilk
2006/0244460 A1 11/2006 Weaver
2006/0247584 A1 11/2006 Sheetz et al.
2006/0252981 A1 11/2006 Matsuda et al.
2006/0252990 A1 11/2006 Kubach
2006/0252993 A1 11/2006 Freed et al.
2006/0258904 A1 11/2006 Stefanchik et al.
2006/0259073 A1 11/2006 Miyamoto et al.
2006/0261763 A1 11/2006 Lott et al.
2006/0263444 A1 11/2006 Ming et al.
2006/0264831 A1 11/2006 Skwarek et al.
2006/0264929 A1 11/2006 Goble et al.
2006/0271042 A1 11/2006 Latterell et al.
2006/0271102 A1 11/2006 Bosshard et al.
2006/0282064 A1 12/2006 Shimizu et al.
2006/0284730 A1 12/2006 Schmid et al.
2006/0287576 A1 12/2006 Tsuji et al.
2006/0289600 A1 12/2006 Wales et al.
2006/0289602 A1 12/2006 Wales et al.
2006/0291981 A1 12/2006 Viola et al.
2007/0005045 A1 1/2007 Mintz et al.
2007/0009570 A1 1/2007 Kim et al.
2007/0010702 A1 1/2007 Wang et al.
2007/0010838 A1 1/2007 Shelton et al.
2007/0016235 A1 1/2007 Tanaka et al.
2007/0018958 A1 1/2007 Tavakoli et al.
2007/0026039 A1 2/2007 Drumheller et al.
2007/0026040 A1 2/2007 Crawley et al.
2007/0027459 A1 2/2007 Horvath et al.
2007/0027468 A1 2/2007 Wales et al.
2007/0027551 A1 2/2007 Farnsworth et al.
2007/0043338 A1 2/2007 Moll et al.
2007/0043384 A1 2/2007 Ortiz et al.
2007/0043387 A1 2/2007 Vargas et al.
2007/0049951 A1 3/2007 Menn
2007/0049966 A1 3/2007 Bonadio et al.
2007/0051375 A1 3/2007 Milliman
2007/0055228 A1 3/2007 Berg et al.
2007/0055305 A1 3/2007 Schnyder et al.
2007/0069851 A1 3/2007 Sung et al.
2007/0073341 A1 3/2007 Smith et al.
2007/0073389 A1 3/2007 Bolduc et al.
2007/0078328 A1 4/2007 Ozaki et al.
2007/0078484 A1 4/2007 Talarico et al.
2007/0084897 A1 4/2007 Shelton et al.
2007/0088376 A1 4/2007 Zacharias
2007/0090788 A1 4/2007 Hansford et al.

(56) **References Cited**

U.S. PATENT DOCUMENTS

2007 0093869 A1 4/2007 Bloom et al.
2007/0102472 A1 5/2007 Shelton
2007/0103437 A1 5/2007 Rosenberg
2007 0106113 A1 5/2007 Ravo
2007 0106317 A1 5/2007 Shelton et al.
2007 0118115 A1 5/2007 Artale et al.
2007 0134251 A1 6/2007 Ashkenazi et al.
2007 0135686 A1 6/2007 Pruitt et al.
2007 0135803 A1 6/2007 Belson
2007 0152612 A1 7/2007 Chen et al.
2007/0152829 A1 7/2007 Lindsay et al.
2007 0155010 A1 7/2007 Farnsworth et al.
2007/0162056 A1 7/2007 Gerbi et al.
2007 0170225 A1 7/2007 Shelton et al.
2007/0173687 A1 7/2007 Shima et al.
2007/0173813 A1 7/2007 Odom
2007/0173872 A1 7/2007 Neuenfeldt
2007 0175950 A1 8/2007 Shelton et al.
2007 0175951 A1 8/2007 Shelton et al.
2007/0175955 A1 8/2007 Shelton et al.
2007 0179476 A1 8/2007 Shelton et al.
2007/0179477 A1 8/2007 Danger
2007 0185545 A1 8/2007 Duke
2007 0187857 A1 8/2007 Riley et al.
2007/0190110 A1 8/2007 Pameijer et al.
2007 0191868 A1 8/2007 Theroux et al.
2007 0191915 A1 8/2007 Strother et al.
2007 0194079 A1 8/2007 Hueil et al.
2007 0194081 A1 8/2007 Hueil et al.
2007/0194082 A1 8/2007 Morgan et al.
2007 0197954 A1 8/2007 Keenan
2007 0198039 A1 8/2007 Jones et al.
2007 0203510 A1 8/2007 Bettuchi
2007 0207010 A1 9/2007 Caspi
2007 0208359 A1 9/2007 Hoffman
2007 0208375 A1 9/2007 Nishizawa et al.
2007 0213750 A1 9/2007 Weadock
2007/0221701 A1 9/2007 Ortiz et al.
2007/0225562 A1 9/2007 Spivey et al.
2007 0233163 A1 10/2007 Bombard et al.
2007 0243227 A1 10/2007 Gertner
2007/0244471 A1 10/2007 Malackowski
2007/0244496 A1 10/2007 Hellenkamp
2007 0246505 A1 10/2007 Pace-Floridia et al.
2007 0260132 A1 11/2007 Sterling
2007 0260242 A1 11/2007 Dycus et al.
2007/0262592 A1 11/2007 Hwang et al.
2007/0270660 A1 11/2007 Caylor et al.
2007/0275035 A1 11/2007 Herman et al.
2007 0276409 A1 11/2007 Ortiz et al.
2007 0279011 A1 12/2007 Jones et al.
2007/0286892 A1 12/2007 Herzberg et al.
2007 0290027 A1 12/2007 Maatta et al.
2007 0296286 A1 12/2007 Avenell
2008 0000941 A1 1/2008 Sonnenschein et al.
2008 0003196 A1 1/2008 Jonn et al.
2008 0007237 A1 1/2008 Nagashima et al.
2008 0015598 A1 1/2008 Prommersberger
2008 0021486 A1 1/2008 Oyola et al.
2008 0029570 A1 2/2008 Shelton et al.
2008 0029573 A1 2/2008 Shelton et al.
2008 0029574 A1 2/2008 Shelton et al.
2008 0029575 A1 2/2008 Shelton et al.
2008 0030170 A1 2/2008 Dacquay et al.
2008 0039746 A1 2/2008 Hissong et al.
2008 0042861 A1 2/2008 Dacquay et al.
2008 0046000 A1 2/2008 Lee et al.
2008 0051833 A1 2/2008 Gramuglia et al.
2008 0064920 A1 3/2008 Bakos et al.
2008 0064921 A1 3/2008 Larkin et al.
2008 0065153 A1 3/2008 Allard et al.
2008 0069736 A1 3/2008 Mingerink et al.
2008 0071328 A1 3/2008 Haubrich et al.
2008 0077158 A1 3/2008 Haider et al.
2008 0078802 A1 4/2008 Hess et al.
2008/0081948 A1 4/2008 Weisenburgh et al.
2008/0082114 A1 4/2008 McKenna et al.
2008/0082125 A1 4/2008 Murray et al.
2008/0082126 A1 4/2008 Murray et al.
2008/0083807 A1 4/2008 Beardsley et al.
2008/0083811 A1 4/2008 Marczyk
2008/0085296 A1 4/2008 Powell et al.
2008/0086078 A1 4/2008 Powell et al.
2008/0091072 A1 4/2008 Omori et al.
2008/0094228 A1 4/2008 Welch et al.
2008/0108443 A1 5/2008 Jinno et al.
2008/0114250 A1 5/2008 Urbano et al.
2008/0125634 A1 5/2008 Ryan et al.
2008/0125749 A1 5/2008 Olson
2008/0126984 A1 5/2008 Fleishman et al.
2008/0128469 A1 6/2008 Dalessandro et al.
2008/0129253 A1 6/2008 Shiue et al.
2008/0135600 A1 6/2008 Hiranuma et al.
2008/0140115 A1 6/2008 Stopek
2008/0140159 A1 6/2008 Bornhoft et al.
2008/0149682 A1 6/2008 Uhm
2008/0154299 A1 6/2008 Livneh
2008/0154335 A1 6/2008 Thrope et al.
2008/0169328 A1 7/2008 Shelton
2008/0169332 A1 7/2008 Shelton et al.
2008/0169333 A1* 7/2008 Shelton A61B 17/105 227 180.1
2008/0172087 A1 7/2008 Fuchs et al.
2008/0177392 A1 7/2008 Williams et al.
2008/0190989 A1 8/2008 Crews et al.
2008/0196253 A1 8/2008 Ezra et al.
2008/0196419 A1 8/2008 Dube
2008/0197167 A1 8/2008 Viola et al.
2008/0200755 A1 8/2008 Bakos
2008/0200762 A1 8/2008 Stokes et al.
2008/0200835 A1 8/2008 Monson et al.
2008/0200911 A1 8/2008 Long
2008/0200933 A1 8/2008 Bakos et al.
2008/0200934 A1 8/2008 Fox
2008/0206186 A1 8/2008 Butler et al.
2008/0208058 A1 8/2008 Sabata et al.
2008/0216704 A1 9/2008 Eisenbeis et al.
2008/0217376 A1 9/2008 Clauson et al.
2008/0234709 A1 9/2008 Houser
2008/0234866 A1 9/2008 Kishi et al.
2008/0242939 A1 10/2008 Johnston
2008/0243088 A1 10/2008 Evans
2008/0243143 A1 10/2008 Kuhns et al.
2008/0249536 A1 10/2008 Stahler et al.
2008/0249608 A1 10/2008 Dave
2008/0255413 A1 10/2008 Zemlok et al.
2008/0255420 A1 10/2008 Lee et al.
2008/0255421 A1 10/2008 Hegeman et al.
2008/0255663 A1 10/2008 Akpek et al.
2008/0262654 A1 10/2008 Omori et al.
2008/0269596 A1 10/2008 Revie et al.
2008/0281171 A1 11/2008 Fennell et al.
2008/0281332 A1 11/2008 Taylor
2008/0287944 A1 11/2008 Pearson et al.
2008/0293910 A1 11/2008 Kapiamba et al.
2008/0294179 A1 11/2008 Balbierz et al.
2008/0296346 A1 12/2008 Shelton, IV et al.
2008/0296347 A1 12/2008 Shelton, IV et al.
2008/0297287 A1 12/2008 Shachar et al.
2008/0298784 A1 12/2008 Kastner
2008/0308504 A1 12/2008 Hallan et al.
2008/0308602 A1 12/2008 Timm et al.
2008/0308603 A1 12/2008 Shelton et al.
2008/0308607 A1 12/2008 Timm et al.
2008/0308807 A1 12/2008 Yamazaki et al.
2008/0312686 A1 12/2008 Ellingwood
2008/0312687 A1 12/2008 Blier
2008/0315829 A1 12/2008 Jones et al.
2009/0001121 A1 1/2009 Hess et al.
2009/0001130 A1 1/2009 Hess et al.
2009/0004455 A1 1/2009 Gravagna et al.
2009/0005809 A1 1/2009 Hess et al.
2009/0007014 A1 1/2009 Coomer et al.
2009/0012534 A1 1/2009 Madhani et al.

(56) **References Cited**

U.S. PATENT DOCUMENTS

2009 0015195 A1 1/2009 Loth-Krausser
2009 0020958 A1 1/2009 Soul
2009 0030437 A1 1/2009 Houser et al.
2009 0043253 A1 2/2009 Podaima
2009 0048583 A1 2/2009 Williams et al.
2009 0048589 A1 2/2009 Takashino et al.
2009 0053288 A1 2/2009 Eskridge, Jr. et al.
2009 0057369 A1 3/2009 Smith et al.
2009 0069806 A1 3/2009 De La Mora Levy et al.
2009 0076506 A1 3/2009 Baker
2009 0078736 A1 3/2009 Van Lue
2009 0081313 A1 3/2009 Aghion et al.
2009 0088659 A1 4/2009 Graham et al.
2009 0090763 A1 4/2009 Zemlok et al.
2009 0099579 A1 4/2009 Nentwick et al.
2009 0099876 A1 4/2009 Whitman
2009 0110533 A1 4/2009 Jinno
2009 0112234 A1 4/2009 Crainich et al.
2009 0114701 A1 5/2009 Zemlok et al.
2009 0118762 A1 5/2009 Crainch et al.
2009 0119011 A1 5/2009 Kondo et al.
2009/0120994 A1 5/2009 Murray et al.
2009 0131819 A1 5/2009 Ritchie et al.
2009/0132400 A1 5/2009 Conway
2009 0135280 A1 5/2009 Johnston et al.
2009 0138003 A1 5/2009 Deville et al.
2009 0143797 A1 6/2009 Smith et al.
2009 0143855 A1 6/2009 Weber et al.
2009/0149871 A9 6/2009 Kagan et al.
2009/0167548 A1 7/2009 Sugahara
2009 0171147 A1 7/2009 Lee et al.
2009/0177218 A1 7/2009 Young et al.
2009 0177226 A1 7/2009 Reinprecht et al.
2009 0181290 A1 7/2009 Baldwin et al.
2009 0188964 A1 7/2009 Orlov
2009/0192534 A1 7/2009 Ortiz et al.
2009 0198272 A1 8/2009 Kerver et al.
2009/0204108 A1 8/2009 Steffen
2009 0204109 A1 8/2009 Grove et al.
2009 0204126 A1 8/2009 Le
2009 0204925 A1 8/2009 Bhat et al.
2009 0206125 A1 8/2009 Huitema et al.
2009 0206126 A1 8/2009 Huitema et al.
2009/0206131 A1 8/2009 Weisenburgh, II et al.
2009 0206133 A1 8/2009 Morgan et al.
2009 0206137 A1 8/2009 Hall et al.
2009 0206139 A1 8/2009 Hall et al.
2009 0206141 A1 8/2009 Huitema et al.
2009/0206142 A1 8/2009 Huitema et al.
2009 0206143 A1 8/2009 Huitema et al.
2009 0221993 A1 9/2009 Sohi et al.
2009 0227834 A1 9/2009 Nakamoto et al.
2009/0234273 A1 9/2009 Intoccia et al.
2009 0236401 A1 9/2009 Cole et al.
2009/0242610 A1 10/2009 Shelton, IV et al.
2009 0246873 A1 10/2009 Yamamoto et al.
2009/0247368 A1 10/2009 Chiang
2009/0247901 A1 10/2009 Zimmer
2009/0248100 A1 10/2009 Vaisnys et al.
2009 0253959 A1 10/2009 Yoshie et al.
2009 0255974 A1 10/2009 Viola
2009 0261141 A1 10/2009 Stratton et al.
2009 0262078 A1 10/2009 Pizzi
2009 0264940 A1 10/2009 Beale et al.
2009 0270895 A1 10/2009 Churchill et al.
2009 0273353 A1 11/2009 Kroh et al.
2009 0277288 A1 11/2009 Doepker et al.
2009 0278406 A1 11/2009 Hoffman
2009 0290016 A1 11/2009 Suda
2009 0292283 A1 11/2009 Odom
2009 0306639 A1 12/2009 Nevo et al.
2009 0308907 A1 12/2009 Nalagatla et al.
2009 0318557 A1 12/2009 Stockel
2009 0318936 A1 12/2009 Harris et al.
2009 0325859 A1 12/2009 Ameer et al.
2010/0002013 A1 1/2010 Kagaya
2010/0005035 A1 1/2010 Carpenter et al.
2010/0012703 A1 1/2010 Calabrese et al.
2010/0015104 A1 1/2010 Fraser et al.
2010/0016853 A1 1/2010 Burbank
2010/0016888 A1 1/2010 Calabrese et al.
2010/0017715 A1 1/2010 Balassanian
2010/0023024 A1 1/2010 Zeiner et al.
2010/0030233 A1 2/2010 Whitman et al.
2010/0030239 A1 2/2010 Viola et al.
2010/0032179 A1 2/2010 Hanspers et al.
2010/0036370 A1 2/2010 Mirel et al.
2010/0036441 A1 2/2010 Procter
2010/0051668 A1 3/2010 Milliman et al.
2010/0057118 A1 3/2010 Dietz et al.
2010/0065604 A1 3/2010 Weng
2010/0069833 A1 3/2010 Wenderow et al.
2010/0069942 A1 3/2010 Shelton, IV
2010/0076483 A1 3/2010 Imuta
2010/0076489 A1 3/2010 Stopek et al.
2010/0081883 A1 4/2010 Murray et al.
2010/0094312 A1 4/2010 Ruiz Morales et al.
2010/0094340 A1 4/2010 Stopek et al.
2010/0094400 A1 4/2010 Bolduc et al.
2010/0100123 A1 4/2010 Bennett
2010/0100124 A1 4/2010 Calabrese et al.
2010/0106167 A1 4/2010 Boulnois et al.
2010/0116519 A1 5/2010 Gareis
2010/0122339 A1 5/2010 Boccacci
2010/0125786 A1 5/2010 Ozawa et al.
2010/0133317 A1 6/2010 Shelton, IV et al.
2010/0137990 A1 6/2010 Apatsidis et al.
2010/0138659 A1 6/2010 Carmichael et al.
2010/0145146 A1 6/2010 Melder
2010/0147921 A1 6/2010 Olson
2010/0147922 A1 6/2010 Olson
2010/0159435 A1 6/2010 Mueller et al.
2010/0168741 A1 7/2010 Sanai et al.
2010/0179022 A1 7/2010 Shirokoshi
2010/0180711 A1 7/2010 Kilibarda et al.
2010/0187285 A1 7/2010 Harris et al.
2010/0191255 A1 7/2010 Crainich et al.
2010/0191262 A1 7/2010 Harris et al.
2010/0191292 A1 7/2010 DeMeo et al.
2010/0193566 A1 8/2010 Scheib et al.
2010/0194541 A1 8/2010 Stevenson et al.
2010/0198159 A1 8/2010 Voss et al.
2010/0204717 A1 8/2010 Knodel
2010/0204721 A1 8/2010 Young et al.
2010/0217281 A1 8/2010 Matsuoka et al.
2010/0218019 A1 8/2010 Eckhard
2010/0222901 A1 9/2010 Swayze et al.
2010/0228250 A1 9/2010 Brogna
2010/0234687 A1 9/2010 Azarbarzin et al.
2010/0241115 A1 9/2010 Benamou et al.
2010/0241137 A1 9/2010 Doyle et al.
2010/0245102 A1 9/2010 Yokoi
2010/0249497 A1 9/2010 Peine et al.
2010/0249947 A1 9/2010 Lesh et al.
2010/0256675 A1 10/2010 Romans
2010/0258327 A1 10/2010 Esenwein et al.
2010/0267525 A1 10/2010 Tanner
2010/0267662 A1 10/2010 Fielder et al.
2010/0274160 A1 10/2010 Yachi et al.
2010/0291184 A1 11/2010 Clark et al.
2010/0292540 A1 11/2010 Hess et al.
2010/0298636 A1 11/2010 Castro et al.
2010/0301097 A1 12/2010 Scirica et al.
2010/0310623 A1 12/2010 Laurencin et al.
2010/0312261 A1 12/2010 Suzuki et al.
2010/0318085 A1 12/2010 Austin et al.
2010/0325568 A1 12/2010 Pedersen et al.
2010/0327041 A1 12/2010 Milliman et al.
2010/0331856 A1 12/2010 Carlson et al.
2011/0006101 A1 1/2011 Hall et al.
2011/0009694 A1 1/2011 Schultz et al.
2011/0011916 A1 1/2011 Levine
2011/0016960 A1 1/2011 Debrailly
2011/0021871 A1 1/2011 Berkelaar

(56) **References Cited**

U.S. PATENT DOCUMENTS

2011 0022032 A1 1/2011 Zemlok et al.
2011 0024477 A1 2/2011 Hall
2011 0024478 A1 2/2011 Shelton, IV
2011 0025311 A1 2/2011 Chauvin et al.
2011 0028991 A1 2/2011 Ikeda et al.
2011/0029003 A1 2/2011 Lavigne et al.
2011/0029270 A1 2/2011 Mueglitz
2011 0036891 A1 2/2011 Zemlok et al.
2011/0046667 A1 2/2011 Culligan et al.
2011/0052660 A1 3/2011 Yang et al.
2011 0056717 A1 3/2011 Herisse
2011 0060363 A1 3/2011 Hess et al.
2011 0066156 A1 3/2011 McGahan et al.
2011/0082538 A1 4/2011 Dahlgren et al.
2011/0087276 A1 4/2011 Bedi et al.
2011/0088921 A1 4/2011 Forgues et al.
2011/0091515 A1 4/2011 Zilberman et al.
2011/0095064 A1 4/2011 Taylor et al.
2011 0095067 A1 4/2011 Ohdaira
2011/0101069 A1 5/2011 Bombard et al.
2011/0101794 A1 5/2011 Schroeder et al.
2011/0112517 A1 5/2011 Peine et al.
2011/0112530 A1 5/2011 Keller
2011/0114697 A1 5/2011 Baxter, III et al.
2011/0118708 A1 5/2011 Burbank et al.
2011/0118754 A1 5/2011 Dachs, II et al.
2011/0125149 A1 5/2011 El-Galley et al.
2011 0125176 A1 5/2011 Yates et al.
2011/0127945 A1 6/2011 Yoneda
2011/0129706 A1 6/2011 Takahashi et al.
2011/0144764 A1 6/2011 Bagga et al.
2011/0147433 A1 6/2011 Shelton, IV et al.
2011/0160725 A1 6/2011 Kabaya et al.
2011/0163146 A1 7/2011 Ortiz et al.
2011/0172495 A1 7/2011 Armstrong
2011/0174861 A1 7/2011 Shelton, IV et al.
2011/0192882 A1 8/2011 Hess et al.
2011/0198381 A1 8/2011 McCardle et al.
2011/0199225 A1 8/2011 Touchberry et al.
2011/0218400 A1 9/2011 Ma et al.
2011/0218550 A1 9/2011 Ma
2011/0220381 A1 9/2011 Friese et al.
2011/0224543 A1 9/2011 Johnson et al.
2011/0225105 A1 9/2011 Scholer et al.
2011 0230713 A1 9/2011 Kleemann et al.
2011 0235168 A1 9/2011 Sander
2011/0238044 A1 9/2011 Main et al.
2011 0241597 A1 10/2011 Zhu et al.
2011/0251606 A1 10/2011 Kerr
2011 0256266 A1 10/2011 Orme et al.
2011 0271186 A1 11/2011 Owens
2011/0275901 A1 11/2011 Shelton, IV
2011/0276083 A1 11/2011 Shelton, IV et al.
2011/0278035 A1 11/2011 Chen
2011/0278343 A1 11/2011 Knodel et al.
2011/0279268 A1 11/2011 Konishi et al.
2011 0285507 A1 11/2011 Nelson
2011/0290856 A1 12/2011 Shelton, IV et al.
2011/0290858 A1 12/2011 Whitman et al.
2011/0292258 A1 12/2011 Adler et al.
2011 0293690 A1 12/2011 Griffin et al.
2011 0295295 A1 12/2011 Shelton, IV et al.
2011 0295299 A1 12/2011 Braithwaite et al.
2011/0313894 A1 12/2011 Dye et al.
2011 0315413 A1 12/2011 Fisher et al.
2012 0004636 A1 1/2012 Lo
2012 0007442 A1 1/2012 Rhodes et al.
2012 0008880 A1 1/2012 Toth
2012 0010615 A1 1/2012 Cummings et al.
2012 0016239 A1 1/2012 Barthe et al.
2012 0016413 A1 1/2012 Timm et al.
2012 0016467 A1 1/2012 Chen et al.
2012 0029272 A1 2/2012 Shelton, IV et al.
2012 0029550 A1 2/2012 Forsell
2012 0033360 A1 2/2012 Hsu
2012/0059286 A1 3/2012 Hastings et al.
2012/0064483 A1 3/2012 Lint et al.
2012/0074200 A1 3/2012 Schmid et al.
2012/0078243 A1 3/2012 Worrell et al.
2012/0078244 A1 3/2012 Worrell et al.
2012/0080336 A1 4/2012 Shelton, IV et al.
2012/0080344 A1 4/2012 Shelton, IV
2012/0080478 A1 4/2012 Morgan et al.
2012/0080498 A1 4/2012 Shelton, IV et al.
2012/0083836 A1 4/2012 Shelton, IV et al.
2012/0086276 A1 4/2012 Sawyers
2012/0095458 A1 4/2012 Cybulski et al.
2012/0101488 A1 4/2012 Aldridge et al.
2012/0109186 A1 5/2012 Parrott et al.
2012/0116261 A1 5/2012 Mumaw et al.
2012/0116262 A1 5/2012 Houser et al.
2012/0116263 A1 5/2012 Houser et al.
2012/0116265 A1 5/2012 Houser et al.
2012/0116266 A1 5/2012 Houser et al.
2012/0116381 A1 5/2012 Houser et al.
2012/0118595 A1 5/2012 Pellenc
2012/0123463 A1 5/2012 Jacobs
2012/0125792 A1 5/2012 Cassivi
2012/0130217 A1 5/2012 Kauphusman et al.
2012/0132286 A1 5/2012 Lim et al.
2012/0132663 A1 5/2012 Kasvikis et al.
2012/0143175 A1 6/2012 Hermann et al.
2012/0171539 A1 7/2012 Rejman et al.
2012/0175398 A1 7/2012 Sandborn et al.
2012/0190964 A1 7/2012 Hyde et al.
2012/0197239 A1 8/2012 Smith et al.
2012/0197272 A1 8/2012 Oray et al.
2012/0203213 A1 8/2012 Kimball et al.
2012/0211542 A1 8/2012 Racenet
2012/0220990 A1 8/2012 Mckenzie et al.
2012/0233298 A1 9/2012 Verbandt et al.
2012/0234895 A1 9/2012 O'Connor et al.
2012/0234897 A1 9/2012 Shelton, IV et al.
2012/0239068 A1 9/2012 Morris et al.
2012/0241494 A1 9/2012 Marczyk
2012/0241503 A1 9/2012 Baxter, III et al.
2012/0248169 A1 10/2012 Widenhouse et al.
2012/0251861 A1 10/2012 Liang et al.
2012/0253328 A1 10/2012 Cunningham et al.
2012/0256494 A1 10/2012 Kesler et al.
2012/0271327 A1 10/2012 West et al.
2012/0283707 A1 11/2012 Giordano et al.
2012/0286019 A1 11/2012 Hueil et al.
2012/0289811 A1 11/2012 Viola et al.
2012/0289979 A1 11/2012 Eskaros et al.
2012/0292367 A1 11/2012 Morgan et al.
2012/0296316 A1 11/2012 Imuta
2012/0296342 A1 11/2012 Haglund Wendelschafer
2012/0298722 A1 11/2012 Hess et al.
2012/0301498 A1 11/2012 Altreuter et al.
2012/0310254 A1 12/2012 Manzo et al.
2012/0312861 A1 12/2012 Gurumurthy et al.
2012/0316424 A1 12/2012 Stopek
2012/0330285 A1 12/2012 Hartoumbekis et al.
2012/0330329 A1 12/2012 Harris et al.
2013/0006227 A1 1/2013 Takashino
2013/0008937 A1 1/2013 Viola
2013/0012983 A1 1/2013 Kleyman
2013/0018400 A1 1/2013 Milton et al.
2013/0020375 A1 1/2013 Shelton, IV et al.
2013/0020376 A1 1/2013 Shelton, IV et al.
2013/0023861 A1 1/2013 Shelton, IV et al.
2013/0023910 A1 1/2013 Solomon et al.
2013/0026208 A1 1/2013 Shelton, IV et al.
2013/0026210 A1 1/2013 Shelton, IV et al.
2013/0030462 A1 1/2013 Keating et al.
2013/0041292 A1 2/2013 Cunningham
2013/0056522 A1 3/2013 Swensgard
2013/0057162 A1 3/2013 Pollischansky
2013/0068816 A1 3/2013 Mandakolathur Vasudevan et al.
2013/0069088 A1 3/2013 Speck et al.
2013/0075447 A1 3/2013 Weisenburgh, II et al.
2013/0087597 A1 4/2013 Shelton, IV et al.
2013/0090534 A1 4/2013 Burns et al.

(56) **References Cited**

U.S. PATENT DOCUMENTS

2013 0096568 A1 4/2013 Justis
2013 0098970 A1 4/2013 Racenet et al.
2013/0106352 A1 5/2013 Nagamine
2013/0112729 A1 5/2013 Beardsley et al.
2013/0116669 A1 5/2013 Shelton, IV et al.
2013/0123816 A1 5/2013 Hodgkinson et al.
2013 0126202 A1 5/2013 Oomori et al.
2013 0131476 A1 5/2013 Siu et al.
2013 0131651 A1 5/2013 Strobl et al.
2013 0136969 A1 5/2013 Yasui et al.
2013/0153639 A1 6/2013 Hodgkinson et al.
2013/0153641 A1 6/2013 Shelton, IV et al.
2013/0158390 A1 6/2013 Tan et al.
2013/0162198 A1 6/2013 Yokota et al.
2013/0165908 A1 6/2013 Purdy et al.
2013/0169217 A1 7/2013 Watanabe et al.
2013/0172713 A1 7/2013 Kirschenman
2013 0172878 A1 7/2013 Smith
2013/0175315 A1 7/2013 Milliman
2013/0175317 A1 7/2013 Yates et al.
2013/0183769 A1 7/2013 Tajima
2013 0211244 A1 8/2013 Nathaniel
2013 0214025 A1 8/2013 Zemlok et al.
2013 0215449 A1 8/2013 Yamasaki
2013 0231681 A1 9/2013 Robinson et al.
2013 0233906 A1 9/2013 Hess et al.
2013/0238021 A1 9/2013 Gross et al.
2013 0248578 A1 9/2013 Arteaga Gonzalez
2013/0253480 A1 9/2013 Kimball et al.
2013/0256373 A1 10/2013 Schmid et al.
2013/0256380 A1 10/2013 Schmid et al.
2013/0267950 A1 10/2013 Rosa et al.
2013 0267978 A1 10/2013 Trissel
2013 0270322 A1 10/2013 Scheib et al.
2013/0277410 A1 10/2013 Fernandez et al.
2013/0284792 A1 10/2013 Ma
2013/0289565 A1 10/2013 Hassler, Jr.
2013/0293353 A1 11/2013 McPherson et al.
2013/0303845 A1 11/2013 Skula et al.
2013/0304084 A1 11/2013 Beira et al.
2013/0306704 A1 11/2013 Balbierz et al.
2013/0327552 A1 12/2013 Lovelass et al.
2013/0333910 A1 12/2013 Tanimoto et al.
2013 0334280 A1 12/2013 Krehel et al.
2013/0334283 A1 12/2013 Swayze et al.
2013/0334285 A1 12/2013 Swayze et al.
2013/0341374 A1 12/2013 Shelton, IV et al.
2014/0001231 A1 1/2014 Shelton, IV et al.
2014/0001234 A1 1/2014 Shelton, IV et al.
2014 0002322 A1 1/2014 Kanome et al.
2014 0005550 A1 1/2014 Lu et al.
2014 0005640 A1 1/2014 Shelton, IV et al.
2014/0005678 A1 1/2014 Shelton, IV et al.
2014 0005702 A1 1/2014 Timm et al.
2014/0005718 A1 1/2014 Shelton, IV et al.
2014 0008289 A1 1/2014 Williams et al.
2014 0014704 A1 1/2014 Onukuri et al.
2014 0014705 A1 1/2014 Baxter, III
2014/0014707 A1 1/2014 Onukuri et al.
2014 0018832 A1 1/2014 Shelton, IV
2014 0022283 A1 1/2014 Chan et al.
2014 0039549 A1 2/2014 Belsky et al.
2014 0041191 A1 2/2014 Knodel
2014 0048580 A1 2/2014 Merchant et al.
2014 0069240 A1 3/2014 Dauvin et al.
2014 0078715 A1 3/2014 Pickard et al.
2014 0081176 A1 3/2014 Hassan
2014 0088614 A1 3/2014 Blumenkranz
2014 0088639 A1 3/2014 Bartels et al.
2014 0094681 A1 4/2014 Valentine et al.
2014 0100558 A1 4/2014 Schmitz et al.
2014 0107697 A1 4/2014 Patani et al.
2014 0110453 A1 4/2014 Wingardner et al.
2014 0115229 A1 4/2014 Kothamasu et al.
2014 0131418 A1 5/2014 Kostrzewski
2014/0131419 A1 5/2014 Bettuchi
2014/0135832 A1 5/2014 Park et al.
2014/0148803 A1 5/2014 Taylor
2014/0151433 A1 6/2014 Shelton, IV et al.
2014/0155916 A1 6/2014 Hodgkinson et al.
2014/0158747 A1 6/2014 Measamer et al.
2014/0166723 A1 6/2014 Beardsley et al.
2014/0166724 A1 6/2014 Schellin et al.
2014/0166725 A1 6/2014 Schellin et al.
2014/0166726 A1 6/2014 Schellin et al.
2014/0175147 A1 6/2014 Manoux et al.
2014/0175150 A1 6/2014 Shelton, IV et al.
2014/0175152 A1 6/2014 Hess et al.
2014/0181710 A1 6/2014 Baalu et al.
2014/0183244 A1 7/2014 Duque et al.
2014/0188091 A1 7/2014 Vidal et al.
2014/0188101 A1 7/2014 Bales, Jr. et al.
2014/0188159 A1 7/2014 Steege
2014/0207124 A1 7/2014 Aldridge et al.
2014/0209658 A1 7/2014 Skalla et al.
2014/0224857 A1 8/2014 Schmid
2014/0228632 A1 8/2014 Sholev et al.
2014/0228867 A1 8/2014 Thomas et al.
2014/0239047 A1 8/2014 Hodgkinson et al.
2014/0243865 A1 8/2014 Swayze et al.
2014/0246475 A1 9/2014 Hall et al.
2014/0248167 A1 9/2014 Sugimoto et al.
2014/0249557 A1 9/2014 Koch et al.
2014/0249573 A1 9/2014 Arav
2014/0262408 A1 9/2014 Woodard
2014/0263541 A1 9/2014 Leimbach et al.
2014/0263552 A1 9/2014 Hall et al.
2014/0263558 A1 9/2014 Hausen et al.
2014/0276720 A1 9/2014 Parihar et al.
2014/0276730 A1 9/2014 Boudreaux et al.
2014/0276776 A1 9/2014 Parihar et al.
2014/0284371 A1 9/2014 Morgan et al.
2014/0287703 A1 9/2014 Herbsommer et al.
2014/0288460 A1 9/2014 Ouyang et al.
2014/0291379 A1 10/2014 Schellin et al.
2014/0291383 A1 10/2014 Spivey et al.
2014/0299648 A1 10/2014 Shelton, IV et al.
2014/0303645 A1 10/2014 Morgan et al.
2014/0303660 A1 10/2014 Boyden et al.
2014/0330161 A1 11/2014 Swayze et al.
2014/0330298 A1 11/2014 Arshonsky et al.
2014/0330579 A1 11/2014 Cashman et al.
2014/0358163 A1 12/2014 Farin et al.
2014/0367445 A1 12/2014 Ingmanson et al.
2014/0371764 A1 12/2014 Oyola et al.
2014/0373003 A1 12/2014 Grez et al.
2014/0374130 A1 12/2014 Nakamura et al.
2014/0378950 A1 12/2014 Chiu
2015/0001272 A1 1/2015 Sniffin et al.
2015/0002089 A1 1/2015 Rejman et al.
2015/0022012 A1 1/2015 Kim et al.
2015/0025549 A1 1/2015 Kilroy et al.
2015/0025571 A1 1/2015 Suzuki et al.
2015/0034697 A1 2/2015 Mastri et al.
2015/0039010 A1 2/2015 Beardsley et al.
2015/0053737 A1 2/2015 Leimbach et al.
2015/0053743 A1 2/2015 Yates et al.
2015/0053746 A1 2/2015 Shelton, IV et al.
2015/0053748 A1 2/2015 Yates et al.
2015/0060516 A1 3/2015 Collings et al.
2015/0060519 A1 3/2015 Shelton, IV et al.
2015/0060520 A1 3/2015 Shelton, IV et al.
2015/0060521 A1 3/2015 Weisenburgh, II et al.
2015/0066000 A1 3/2015 An et al.
2015/0067582 A1 3/2015 Donnelly et al.
2015/0076208 A1 3/2015 Shelton, IV
2015/0076209 A1 3/2015 Shelton, IV et al.
2015/0076210 A1 3/2015 Shelton, IV et al.
2015/0076211 A1 3/2015 Irka et al.
2015/0080883 A1 3/2015 Haverkost et al.
2015/0082624 A1 3/2015 Craig et al.
2015/0083781 A1 3/2015 Giordano et al.
2015/0087952 A1 3/2015 Albert et al.
2015/0088127 A1 3/2015 Craig et al.

(56) **References Cited**

U.S. PATENT DOCUMENTS

2015 0088547 A1 3/2015 Balram et al.
2015 0090760 A1 4/2015 Giordano et al.
2015 0090762 A1 4/2015 Giordano et al.
2015 0127021 A1 5/2015 Harris et al.
2015/0134077 A1 5/2015 Shelton, IV et al.
2015/0150620 A1 6/2015 Miyamoto et al.
2015/0173749 A1 6/2015 Shelton, IV et al.
2015/0173756 A1 6/2015 Baxter, III et al.
2015 0173789 A1 6/2015 Baxter, III et al.
2015/0196295 A1 7/2015 Shelton, IV et al.
2015/0196299 A1 7/2015 Swayze et al.
2015 0201918 A1 7/2015 Kumar et al.
2015/0201932 A1 7/2015 Swayze et al.
2015/0201936 A1 7/2015 Swayze et al.
2015/0201937 A1 7/2015 Swayze et al.
2015/0201938 A1 7/2015 Swayze et al.
2015/0201939 A1 7/2015 Swayze et al.
2015/0201940 A1 7/2015 Swayze et al.
2015/0201941 A1 7/2015 Swayze et al.
2015/0209045 A1 7/2015 Hodgkinson et al.
2015 0216605 A1 8/2015 Baldwin
2015 0222212 A1 8/2015 Iwata
2015/0223868 A1 8/2015 Brandt et al.
2015/0230697 A1 8/2015 Phee et al.
2015 0230794 A1 8/2015 Wellman et al.
2015 0230861 A1 8/2015 Woloszko et al.
2015/0231409 A1 8/2015 Racenet et al.
2015/0238118 A1 8/2015 Legassey et al.
2015/0272557 A1 10/2015 Overmyer et al.
2015/0272571 A1 10/2015 Leimbach et al.
2015/0272580 A1 10/2015 Leimbach et al.
2015/0272582 A1 10/2015 Leimbach et al.
2015 0272606 A1 10/2015 Nobis
2015 0297200 A1 10/2015 Fitzsimmons et al.
2015 0297222 A1 10/2015 Huitema et al.
2015/0297223 A1 10/2015 Huitema et al.
2015/0297225 A1 10/2015 Huitema et al.
2015/0297228 A1 10/2015 Huitema et al.
2015/0297824 A1 10/2015 Cabiri et al.
2015/0303417 A1 10/2015 Koeder et al.
2015 0305743 A1 10/2015 Casasanta et al.
2015/0313594 A1 11/2015 Shelton, IV et al.
2015 0324317 A1 11/2015 Collins et al.
2015/0352699 A1 12/2015 Sakai et al.
2015/0366585 A1 12/2015 Lemay et al.
2015/0367497 A1 12/2015 Ito et al.
2015/0372265 A1 12/2015 Morisaku et al.
2015/0374372 A1 12/2015 Zergiebel et al.
2015/0374378 A1 12/2015 Giordano et al.
2016 0000437 A1 1/2016 Giordano et al.
2016 0000452 A1 1/2016 Yates et al.
2016 0000453 A1 1/2016 Yates et al.
2016 0029998 A1 2/2016 Brister et al.
2016 0030042 A1 2/2016 Heinrich et al.
2016/0030043 A1 2/2016 Fanelli et al.
2016 0030076 A1 2/2016 Faller et al.
2016 0051316 A1 2/2016 Boudreaux
2016/0066913 A1 3/2016 Swayze et al.
2016 0069449 A1 3/2016 Kanai et al.
2016 0074035 A1 3/2016 Whitman et al.
2016 0074040 A1 3/2016 Widenhouse et al.
2016 0081678 A1 3/2016 Kappel et al.
2016 0082161 A1 3/2016 Zilberman et al.
2016 0089175 A1 3/2016 Hibner et al.
2016 0099601 A1 4/2016 Leabman et al.
2016 0100838 A1 4/2016 Beaupréet al.
2016 0118201 A1 4/2016 Nicholas et al.
2016 0132026 A1 5/2016 Wingardner et al.
2016 0135835 A1 5/2016 Onuma
2016 0135895 A1 5/2016 Faasse et al.
2016 0139666 A1 5/2016 Rubin et al.
2016 0174969 A1 6/2016 Kerr et al.
2016 0174983 A1 6/2016 Shelton, IV et al.
2016 0175021 A1 6/2016 Hassler, Jr.
2016 0183939 A1 6/2016 Shelton, IV et al.
2016/0183943 A1 6/2016 Shelton, IV
2016/0183944 A1 6/2016 Swensgard et al.
2016/0192927 A1 7/2016 Kostrzewski
2016/0192960 A1 7/2016 Bueno et al.
2016/0199063 A1 7/2016 Mandakolathur Vasudevan et al.
2016/0199956 A1 7/2016 Shelton, IV et al.
2016/0220150 A1 8/2016 Sharonov
2016/0235494 A1 8/2016 Shelton, IV et al.
2016/0242783 A1 8/2016 Shelton, IV et al.
2016/0242855 A1 8/2016 Fichtinger et al.
2016/0249910 A1 9/2016 Shelton, IV et al.
2016/0249922 A1 9/2016 Morgan et al.
2016/0249929 A1 9/2016 Cappola et al.
2016/0256159 A1 9/2016 Pinjala et al.
2016/0256184 A1 9/2016 Shelton, IV et al.
2016/0256221 A1 9/2016 Smith
2016/0256229 A1 9/2016 Morgan et al.
2016/0262745 A1 9/2016 Morgan et al.
2016/0262921 A1 9/2016 Balbierz et al.
2016/0270781 A1 9/2016 Scirica
2016/0287265 A1 10/2016 Macdonald et al.
2016/0287279 A1 10/2016 Bovay et al.
2016/0302820 A1 10/2016 Hibner et al.
2016/0310143 A1 10/2016 Bettuchi
2016/0314716 A1 10/2016 Grubbs
2016/0314717 A1 10/2016 Grubbs
2016/0345972 A1 12/2016 Beardsley et al.
2016/0367122 A1 12/2016 Ichimura et al.
2016/0374669 A1 12/2016 Overmyer et al.
2016/0374716 A1 12/2016 Kessler
2017/0000549 A1 1/2017 Gilbert et al.
2017/0007234 A1 1/2017 Chin et al.
2017/0007244 A1 1/2017 Shelton, IV et al.
2017/0007245 A1 1/2017 Shelton, IV et al.
2017/0007347 A1 1/2017 Jaworek et al.
2017/0020616 A1 1/2017 Vale et al.
2017/0035419 A1 2/2017 Decker et al.
2017/0055819 A1 3/2017 Hansen et al.
2017/0055980 A1 3/2017 Vendely et al.
2017/0056008 A1 3/2017 Shelton, IV et al.
2017/0056016 A1 3/2017 Barton et al.
2017/0056018 A1 3/2017 Zeiner et al.
2017/0066054 A1 3/2017 Birky
2017/0079642 A1 3/2017 Overmyer et al.
2017/0086829 A1 3/2017 Vendely et al.
2017/0086830 A1 3/2017 Yates et al.
2017/0086842 A1 3/2017 Shelton, IV et al.
2017/0086930 A1 3/2017 Thompson et al.
2017/0086932 A1 3/2017 Auld et al.
2017/0095252 A1 4/2017 Smith et al.
2017/0095922 A1 4/2017 Licht et al.
2017/0105727 A1 4/2017 Scheib et al.
2017/0105733 A1 4/2017 Scheib et al.
2017/0105786 A1 4/2017 Scheib et al.
2017/0106302 A1 4/2017 Cummings et al.
2017/0135711 A1 5/2017 Overmyer et al.
2017/0135717 A1 5/2017 Boudreaux et al.
2017/0135747 A1 5/2017 Broderick et al.
2017/0143336 A1 5/2017 Shah et al.
2017/0168187 A1 6/2017 Calderoni et al.
2017/0172382 A1 6/2017 Nir et al.
2017/0172549 A1 6/2017 Smaby et al.
2017/0172662 A1 6/2017 Panescu et al.
2017/0181803 A1 6/2017 Mayer-Ullmann et al.
2017/0182195 A1 6/2017 Wagner
2017/0182211 A1 6/2017 Raxworthy et al.
2017/0196558 A1 7/2017 Morgan et al.
2017/0196649 A1 7/2017 Yates et al.
2017/0202605 A1 7/2017 Shelton, IV et al.
2017/0202607 A1 7/2017 Shelton, IV et al.
2017/0202770 A1 7/2017 Friedrich et al.
2017/0224332 A1 8/2017 Hunter et al.
2017/0231628 A1 8/2017 Shelton, IV et al.
2017/0231629 A1 8/2017 Stopek et al.
2017/0238962 A1 8/2017 Hansen et al.
2017/0238991 A1 8/2017 Worrell et al.
2017/0242455 A1 8/2017 Dickens
2017/0245880 A1 8/2017 Honda et al.
2017/0245949 A1 8/2017 Randle

(56) **References Cited**

U.S. PATENT DOCUMENTS

2017/0249431 A1 8/2017 Shelton, IV et al.
2017/0252060 A1 9/2017 Ellingson et al.
2017/0255799 A1 9/2017 Zhao et al.
2017/0258471 A1 9/2017 DiNardo et al.
2017/0262110 A1 9/2017 Polishchuk et al.
2017/0265774 A1 9/2017 Johnson et al.
2017/0281186 A1 10/2017 Shelton, IV et al.
2017/0296173 A1 10/2017 Shelton, IV et al.
2017/0296185 A1 10/2017 Swensgard et al.
2017/0296213 A1 10/2017 Swensgard et al.
2017/0303984 A1 10/2017 Malackowski
2017/0312042 A1 11/2017 Giordano et al.
2017/0319047 A1 11/2017 Poulsen et al.
2017/0319201 A1 11/2017 Morgan et al.
2017/0333034 A1 11/2017 Morgan et al.
2017/0333035 A1 11/2017 Morgan et al.
2017/0348010 A1 12/2017 Chiang
2017/0348043 A1 12/2017 Wang et al.
2017/0354413 A1 12/2017 Chen et al.
2017/0358052 A1 12/2017 Yuan
2017/0360441 A1 12/2017 Sgroi
2018/0008265 A1 1/2018 Hatanaka et al.
2018/0042610 A1 2/2018 Sgroi, Jr.
2018/0042689 A1 2/2018 Mozdzierz et al.
2018/0049738 A1 2/2018 Meloul et al.
2018/0049794 A1 2/2018 Swayze et al.
2018/0051780 A1 2/2018 Shelton, IV et al.
2018/0055501 A1 3/2018 Zemlok et al.
2018/0067004 A1 3/2018 Sgroi, Jr.
2018/0085117 A1 3/2018 Shelton, IV et al.
2018/0085120 A1 3/2018 Viola
2018/0092710 A1 4/2018 Bosisio et al.
2018/0114591 A1 4/2018 Pribanic et al.
2018/0116658 A1 5/2018 Aronhalt, IV et al.
2018/0116662 A1 5/2018 Shelton, IV et al.
2018/0125481 A1 5/2018 Yates et al.
2018/0125487 A1 5/2018 Beardsley
2018/0125488 A1 5/2018 Morgan et al.
2018/0125594 A1 5/2018 Beardsley
2018/0132845 A1 5/2018 Schmid et al.
2018/0132849 A1 5/2018 Miller et al.
2018/0132850 A1 5/2018 Leimbach et al.
2018/0132926 A1 5/2018 Asher et al.
2018/0132952 A1 5/2018 Spivey et al.
2018/0133521 A1 5/2018 Frushour et al.
2018/0140299 A1 5/2018 Weaner et al.
2018/0146960 A1 5/2018 Shelton, IV et al.
2018/0153542 A1 6/2018 Shelton, IV et al.
2018/0153634 A1 6/2018 Zemlok et al.
2018/0161034 A1 6/2018 Scheib et al.
2018/0168572 A1 6/2018 Burbank
2018/0168574 A1 6/2018 Robinson et al.
2018/0168575 A1 6/2018 Simms et al.
2018/0168577 A1 6/2018 Aronhalt et al.
2018/0168579 A1 6/2018 Aronhalt et al.
2018/0168592 A1 6/2018 Overmyer et al.
2018/0168598 A1 6/2018 Shelton, IV et al.
2018/0168608 A1 6/2018 Shelton, IV et al.
2018/0168609 A1 6/2018 Fanelli et al.
2018/0168610 A1 6/2018 Shelton, IV et al.
2018/0168615 A1 6/2018 Shelton, IV et al.
2018/0168618 A1 6/2018 Scott et al.
2018/0168619 A1 6/2018 Scott et al.
2018/0168623 A1 6/2018 Simms et al.
2018/0168625 A1 6/2018 Posada et al.
2018/0168633 A1 6/2018 Shelton, IV et al.
2018/0168647 A1 6/2018 Shelton, IV et al.
2018/0168648 A1 6/2018 Shelton, IV et al.
2018/0168650 A1 6/2018 Shelton, IV et al.
2018/0168754 A1 6/2018 Overmyer
2018/0168756 A1 6/2018 Liao et al.
2018/0206904 A1 7/2018 Felder et al.
2018/0228490 A1 8/2018 Richard et al.
2018/0231111 A1 8/2018 Mika et al.
2018/0231475 A1 8/2018 Brown et al.
2018/0235609 A1 8/2018 Harris et al.
2018/0235617 A1 8/2018 Shelton, IV et al.
2018/0235618 A1 8/2018 Kostrzewski
2018/0235626 A1 8/2018 Shelton, IV et al.
2018/0236181 A1 8/2018 Marlin et al.
2018/0242970 A1 8/2018 Mozdzierz
2018/0247711 A1 8/2018 Terry
2018/0250002 A1 9/2018 Eschbach
2018/0271520 A1 9/2018 Shelton, IV et al.
2018/0271553 A1 9/2018 Worrell
2018/0271604 A1 9/2018 Grout et al.
2018/0273597 A1 9/2018 Stimson
2018/0279994 A1 10/2018 Schaer et al.
2018/0280073 A1 10/2018 Sanai et al.
2018/0289371 A1 10/2018 Wang et al.
2018/0296216 A1 10/2018 Shelton, IV et al.
2018/0296290 A1 10/2018 Namiki et al.
2018/0317905 A1 11/2018 Olson et al.
2018/0317915 A1 11/2018 McDonald, II
2018/0325514 A1 11/2018 Harris et al.
2018/0333169 A1 11/2018 Leimbach et al.
2018/0360446 A1 12/2018 Shelton, IV et al.
2018/0360456 A1 12/2018 Shelton, IV et al.
2018/0360473 A1 12/2018 Shelton, IV et al.
2018/0368066 A1 12/2018 Howell et al.
2018/0368833 A1 12/2018 Shelton, IV et al.
2018/0368844 A1 12/2018 Bakos et al.
2018/0372806 A1 12/2018 Laughery et al.
2018/0375165 A1 12/2018 Shelton, IV et al.
2019/0000459 A1 1/2019 Shelton, IV et al.
2019/0000461 A1 1/2019 Shelton, IV et al.
2019/0000462 A1 1/2019 Shelton, IV et al.
2019/0000470 A1 1/2019 Yates et al.
2019/0000475 A1 1/2019 Shelton, IV et al.
2019/0000476 A1 1/2019 Shelton, IV et al.
2019/0000477 A1 1/2019 Shelton, IV et al.
2019/0000481 A1 1/2019 Harris et al.
2019/0000535 A1 1/2019 Messerly et al.
2019/0000536 A1 1/2019 Yates et al.
2019/0006047 A1 1/2019 Gorek et al.
2019/0008515 A1 1/2019 Beardsley et al.
2019/0015102 A1 1/2019 Baber et al.
2019/0015165 A1 1/2019 Giordano et al.
2019/0017311 A1 1/2019 McGettrick et al.
2019/0021733 A1 1/2019 Burbank
2019/0029682 A1 1/2019 Huitema et al.
2019/0029701 A1 1/2019 Shelton, IV et al.
2019/0033955 A1 1/2019 Leimbach et al.
2019/0038281 A1 2/2019 Shelton, IV et al.
2019/0038282 A1 2/2019 Shelton, IV et al.
2019/0038283 A1 2/2019 Shelton, IV et al.
2019/0038285 A1 2/2019 Mozdzierz
2019/0059986 A1 2/2019 Shelton, IV et al.
2019/0076143 A1 3/2019 Smith
2019/0090871 A1 3/2019 Shelton, IV et al.
2019/0091183 A1 3/2019 Tomat et al.
2019/0099229 A1 4/2019 Spivey et al.
2019/0104919 A1 4/2019 Shelton, IV et al.
2019/0105035 A1 4/2019 Shelton, IV et al.
2019/0105036 A1 4/2019 Morgan et al.
2019/0105037 A1 4/2019 Morgan et al.
2019/0105039 A1 4/2019 Morgan et al.
2019/0105043 A1 4/2019 Jaworek et al.
2019/0105044 A1 4/2019 Shelton, IV et al.
2019/0110779 A1 4/2019 Gardner et al.
2019/0110791 A1 4/2019 Shelton, IV et al.
2019/0117224 A1 4/2019 Setser et al.
2019/0125320 A1 5/2019 Shelton, IV et al.
2019/0125335 A1 5/2019 Shelton, IV et al.
2019/0125336 A1 5/2019 Deck et al.
2019/0125338 A1 5/2019 Shelton, IV et al.
2019/0125342 A1 5/2019 Beardsley et al.
2019/0125344 A1 5/2019 DiNardo et al.
2019/0125361 A1 5/2019 Shelton, IV et al.
2019/0125377 A1 5/2019 Shelton, IV
2019/0125378 A1 5/2019 Shelton, IV et al.
2019/0125388 A1 5/2019 Shelton, IV et al.
2019/0125430 A1 5/2019 Shelton, IV et al.
2019/0125431 A1 5/2019 Shelton, IV et al.

(56) **References Cited**

U.S. PATENT DOCUMENTS

2019/0125432 A1 5/2019 Shelton, IV et al.
2019/0125454 A1 5/2019 Stokes et al.
2019/0125455 A1 5/2019 Shelton, IV et al.
2019/0125458 A1 5/2019 Shelton, IV et al.
2019/0125459 A1 5/2019 Shelton, IV et al.
2019/0125476 A1 5/2019 Shelton, IV et al.
2019/0133422 A1 5/2019 Nakamura
2019/0133577 A1 5/2019 Weadock et al.
2019/0138770 A1 5/2019 Compaijen et al.
2019/0142421 A1 5/2019 Shelton, IV
2019/0142423 A1 5/2019 Satti, III et al.
2019/0150925 A1 5/2019 Marczyk et al.
2019/0151029 A1 5/2019 Robinson
2019/0159778 A1 5/2019 Shelton, IV et al.
2019/0175847 A1 6/2019 Pocreva et al.
2019/0183502 A1 6/2019 Shelton, IV et al.
2019/0192141 A1 6/2019 Shelton, IV et al.
2019/0192146 A1 6/2019 Widenhouse et al.
2019/0192147 A1 6/2019 Shelton, IV et al.
2019/0192148 A1 6/2019 Shelton, IV et al.
2019/0192151 A1 6/2019 Shelton, IV et al.
2019/0192153 A1 6/2019 Shelton, IV et al.
2019/0192155 A1 6/2019 Shelton, IV et al.
2019/0192157 A1 6/2019 Scott et al.
2019/0200844 A1 7/2019 Shelton, IV et al.
2019/0200905 A1 7/2019 Shelton, IV et al.
2019/0200906 A1 7/2019 Shelton, IV et al.
2019/0200977 A1 7/2019 Shelton, IV et al.
2019/0200981 A1 7/2019 Harris et al.
2019/0200986 A1 7/2019 Shelton, IV et al.
2019/0200987 A1 7/2019 Shelton, IV et al.
2019/0200988 A1 7/2019 Shelton, IV
2019/0200989 A1 7/2019 Burbank et al.
2019/0200997 A1 7/2019 Shelton, IV et al.
2019/0200998 A1 7/2019 Shelton, IV et al.
2019/0201020 A1 7/2019 Shelton, IV et al.
2019/0201024 A1 7/2019 Shelton, IV et al.
2019/0201025 A1 7/2019 Shelton, IV et al.
2019/0201026 A1 7/2019 Shelton, IV et al.
2019/0201027 A1 7/2019 Shelton, IV et al.
2019/0201029 A1 7/2019 Shelton, IV et al.
2019/0201030 A1 7/2019 Shelton, IV et al.
2019/0201033 A1 7/2019 Yates et al.
2019/0201034 A1 7/2019 Shelton, IV et al.
2019/0201045 A1 7/2019 Yates et al.
2019/0201046 A1 7/2019 Shelton, IV et al.
2019/0201047 A1 7/2019 Yates et al.
2019/0201079 A1 7/2019 Shelton, IV et al.
2019/0201104 A1 7/2019 Shelton, IV et al.
2019/0201112 A1 7/2019 Wiener et al.
2019/0201113 A1 7/2019 Shelton, IV et al.
2019/0201115 A1 7/2019 Shelton, IV et al.
2019/0201118 A1 7/2019 Shelton, IV et al.
2019/0201120 A1 7/2019 Shelton, IV et al.
2019/0201136 A1 7/2019 Shelton, IV et al.
2019/0201137 A1 7/2019 Shelton, IV et al.
2019/0201139 A1 7/2019 Shelton, IV et al.
2019/0201140 A1 7/2019 Yates et al.
2019/0201142 A1 7/2019 Shelton, IV et al.
2019/0201158 A1 7/2019 Shelton, IV et al.
2019/0201594 A1 7/2019 Shelton, IV et al.
2019/0205001 A1 7/2019 Messerly et al.
2019/0205567 A1 7/2019 Shelton, IV et al.
2019/0206551 A1 7/2019 Yates et al.
2019/0206555 A1 7/2019 Morgan et al.
2019/0206561 A1 7/2019 Shelton, IV et al.
2019/0206562 A1 7/2019 Shelton, IV et al.
2019/0206564 A1 7/2019 Shelton, IV et al.
2019/0206565 A1 7/2019 Shelton, IV
2019/0206569 A1 7/2019 Shelton, IV et al.
2019/0209172 A1 7/2019 Shelton, IV et al.
2019/0209247 A1 7/2019 Giordano et al.
2019/0209248 A1 7/2019 Giordano et al.
2019/0209249 A1 7/2019 Giordano et al.
2019/0209250 A1 7/2019 Giordano et al.
2019/0216558 A1 7/2019 Giordano et al.
2019/0239873 A1 8/2019 Laurent et al.
2019/0247048 A1 8/2019 Gasparovich et al.
2019/0261982 A1 8/2019 Holsten
2019/0261983 A1 8/2019 Granger et al.
2019/0261984 A1 8/2019 Nelson et al.
2019/0261987 A1 8/2019 Viola et al.
2019/0262153 A1 8/2019 Tassoni et al.
2019/0269400 A1 9/2019 Mandakolathur Vasudevan et al.
2019/0269402 A1 9/2019 Murray et al.
2019/0269428 A1 9/2019 Allen et al.
2019/0274685 A1 9/2019 Olson et al.
2019/0274716 A1 9/2019 Nott et al.
2019/0282233 A1 9/2019 Burbank et al.
2019/0290264 A1 9/2019 Morgan et al.
2019/0290266 A1 9/2019 Scheib et al.
2019/0290267 A1 9/2019 Baxter, III et al.
2019/0290297 A1 9/2019 Haider et al.
2019/0298350 A1 10/2019 Shelton, IV et al.
2019/0298352 A1 10/2019 Shelton, IV et al.
2019/0298353 A1 10/2019 Shelton, IV et al.
2019/0298360 A1 10/2019 Shelton, IV et al.
2019/0298361 A1 10/2019 Shelton, IV et al.
2019/0298362 A1 10/2019 Shelton, IV et al.
2019/0298381 A1 10/2019 Kreidler et al.
2019/0307452 A1 10/2019 Shelton, IV et al.
2019/0307453 A1 10/2019 Shelton, IV et al.
2019/0307454 A1 10/2019 Shelton, IV et al.
2019/0307456 A1 10/2019 Shelton, IV et al.
2019/0314015 A1 10/2019 Shelton, IV et al.
2019/0321040 A1 10/2019 Shelton, IV
2019/0321062 A1 10/2019 Williams
2019/0328387 A1 10/2019 Overmyer et al.
2019/0328390 A1 10/2019 Harris et al.
2019/0343515 A1 11/2019 Morgan et al.
2019/0350581 A1 11/2019 Baxter, III et al.
2019/0357909 A1 11/2019 Huitema et al.
2019/0388091 A1 12/2019 Eschbach et al.
2020/0000531 A1 1/2020 Giordano et al.
2020/0008802 A1 1/2020 Aronhalt et al.
2020/0008809 A1 1/2020 Shelton, IV et al.
2020/0008827 A1 1/2020 Dearden et al.
2020/0015817 A1 1/2020 Harris et al.
2020/0015819 A1 1/2020 Shelton, IV et al.
2020/0015915 A1 1/2020 Swayze et al.
2020/0030020 A1 1/2020 Wang et al.
2020/0037939 A1 2/2020 Castagna et al.
2020/0038016 A1 2/2020 Shelton, IV et al.
2020/0038018 A1 2/2020 Shelton, IV et al.
2020/0038020 A1 2/2020 Yates et al.
2020/0046355 A1 2/2020 Harris et al.
2020/0046356 A1 2/2020 Baxter, III et al.
2020/0054320 A1 2/2020 Harris et al.
2020/0054321 A1 2/2020 Harris et al.
2020/0054329 A1 2/2020 Shelton, IV et al.
2020/0054332 A1 2/2020 Shelton, IV et al.
2020/0054333 A1 2/2020 Shelton, IV et al.
2020/0054334 A1 2/2020 Shelton, IV et al.
2020/0054355 A1 2/2020 Laurent et al.
2020/0060523 A1 2/2020 Matsuda et al.
2020/0060680 A1 2/2020 Shelton, IV et al.
2020/0060713 A1 2/2020 Leimbach et al.
2020/0061385 A1 2/2020 Schwarz et al.
2020/0085431 A1 3/2020 Swayze et al.
2020/0085435 A1 3/2020 Shelton, IV et al.
2020/0085518 A1 3/2020 Giordano et al.
2020/0093484 A1 3/2020 Shelton, IV et al.
2020/0093485 A1 3/2020 Shelton, IV et al.
2020/0093506 A1 3/2020 Leimbach et al.
2020/0093550 A1 3/2020 Spivey et al.
2020/0100783 A1 4/2020 Yates et al.
2020/0107829 A1 4/2020 Shelton, IV et al.
2020/0114505 A1 4/2020 Kikuchi
2020/0138436 A1 5/2020 Yates et al.
2020/0138507 A1 5/2020 Davison et al.
2020/0138534 A1 5/2020 Garcia Kilroy et al.
2020/0146741 A1 5/2020 Long et al.
2020/0187943 A1 6/2020 Shelton, IV et al.
2020/0197027 A1 6/2020 Hershberger et al.

(56) **References Cited**

U.S. PATENT DOCUMENTS

2020 0205810 A1 7/2020 Posey et al.
2020/0205811 A1 7/2020 Posey et al.
2020 0205823 A1 7/2020 Vendely et al.
2020.0214706 A1 7/2020 Vendely et al.
2020 0214731 A1 7/2020 Shelton, IV et al.
2020/0222047 A1 7/2020 Shelton, IV et al.
2020/0229814 A1 7/2020 Amariglio et al.
2020 0237371 A1 7/2020 Huitema et al.
2020 0253605 A1 8/2020 Swayze et al.
2020 0261078 A1 8/2020 Bakos et al.
2020 0261086 A1 8/2020 Zeiner et al.
2020 0261087 A1 8/2020 Timm et al.
2020/0261106 A1 8/2020 Hess et al.
2020 0268377 A1 8/2020 Schmid et al.
2020/0275927 A1 9/2020 Shelton, IV et al.
2020/0275928 A1 9/2020 Shelton, IV et al.
2020 0275930 A1 9/2020 Harris et al.
2020/0280219 A1 9/2020 Laughery et al.
2020 0281585 A1 9/2020 Timm et al.
2020.0281590 A1 9/2020 Shelton, IV et al.
2020 0289112 A1 9/2020 Whitfield et al.
2020 0297341 A1 9/2020 Yates et al.
2020 0297346 A1 9/2020 Shelton, IV et al.
2020 0305862 A1 10/2020 Yates et al.
2020 0305863 A1 10/2020 Yates et al.
2020 0305864 A1 10/2020 Yates et al.
2020 0305870 A1 10/2020 Shelton, IV
2020 0305871 A1 10/2020 Shelton, IV et al.
2020 0305872 A1 10/2020 Weidner et al.
2020 0305874 A1 10/2020 Huitema et al.
2020/0315612 A1 10/2020 Shelton, IV et al.
2020/0315623 A1 10/2020 Eisinger et al.
2020 0315625 A1 10/2020 Hall et al.
2020 0315983 A1 10/2020 Widenhouse et al.
2020/0323526 A1 10/2020 Huang et al.
2020/0330092 A1 10/2020 Shelton, IV et al.
2020/0330093 A1 10/2020 Shelton, IV et al.
2020/0330096 A1 10/2020 Shelton, IV et al.
2020/0330181 A1 10/2020 Junger et al.
2020/0337693 A1 10/2020 Shelton, IV et al.
2020/0337791 A1 10/2020 Shelton, IV et al.
2020/0345346 A1 11/2020 Shelton, IV et al.
2020 0345349 A1 11/2020 Kimball et al.
2020/0345352 A1 11/2020 Shelton, IV et al.
2020 0345353 A1 11/2020 Leimbach et al.
2020 0345354 A1 11/2020 Leimbach et al.
2020/0345355 A1 11/2020 Baxter, III et al.
2020 0345356 A1 11/2020 Leimbach et al.
2020 0345357 A1 11/2020 Leimbach et al.
2020 0345358 A1 11/2020 Jenkins
2020 0345359 A1 11/2020 Baxter, III et al.
2020 0345360 A1 11/2020 Leimbach et al.
2020/0345363 A1 11/2020 Shelton, IV et al.
2020 0345435 A1 11/2020 Traina
2020/0345446 A1 11/2020 Kimball et al.
2020 0352562 A1 11/2020 Timm et al.
2020 0367885 A1 11/2020 Yates et al.
2020/0367886 A1 11/2020 Shelton, IV et al.
2020/0375585 A1 12/2020 Swayze et al.
2020 0375592 A1 12/2020 Hall et al.
2020 0375593 A1 12/2020 Hunter et al.
2020 0375597 A1 12/2020 Shelton, IV et al.
2020 0390444 A1 12/2020 Harris et al.
2020 0397430 A1 12/2020 Patel et al.
2020 0397433 A1 12/2020 Lytle, IV et al.
2020 0405290 A1 12/2020 Shelton, IV et al.
2020 0405292 A1 12/2020 Shelton, IV et al.
2020 0405293 A1 12/2020 Shelton, IV et al.
2020 0405294 A1 12/2020 Shelton, IV
2020 0405295 A1 12/2020 Shelton, IV et al.
2020 0405296 A1 12/2020 Shelton, IV et al.
2020 0405302 A1 12/2020 Shelton, IV et al.
2020 0405304 A1 12/2020 Mozdzierz et al.
2020 0405306 A1 12/2020 Shelton, IV et al.
2020 0405307 A1 12/2020 Shelton, IV et al.
2020/0405308 A1 12/2020 Shelton, IV
2020/0405312 A1 12/2020 Shelton, IV et al.
2020/0405316 A1 12/2020 Shelton, IV et al.
2020/0405341 A1 12/2020 Hess et al.
2020/0405403 A1 12/2020 Shelton, IV et al.
2020/0405404 A1 12/2020 Shelton, IV et al.
2020/0405409 A1 12/2020 Shelton, IV et al.
2020/0405410 A1 12/2020 Shelton, IV
2020/0405416 A1 12/2020 Shelton, IV et al.
2020/0405437 A1 12/2020 Shelton, IV et al.
2020/0405439 A1 12/2020 Shelton, IV et al.
2020/0410177 A1 12/2020 Shelton, IV
2021/0000466 A1 1/2021 Leimbach et al.
2021/0000467 A1 1/2021 Shelton, IV et al.
2021/0000470 A1 1/2021 Leimbach et al.
2021/0007742 A1 1/2021 Rector et al.
2021/0015480 A1 1/2021 Shelton, IV et al.
2021/0045742 A1 2/2021 Shelton, IV et al.
2021/0052271 A1 2/2021 Harris et al.
2021/0059661 A1 3/2021 Schmid et al.
2021/0059662 A1 3/2021 Shelton, IV
2021/0059664 A1 3/2021 Hensel et al.
2021/0059669 A1 3/2021 Yates et al.
2021/0059670 A1 3/2021 Overmyer et al.
2021/0059671 A1 3/2021 Shelton, IV et al.
2021/0059672 A1 3/2021 Giordano et al.
2021/0059673 A1 3/2021 Shelton, IV et al.
2021/0068817 A1 3/2021 Shelton, IV et al.
2021/0068818 A1 3/2021 Overmyer et al.
2021/0068820 A1 3/2021 Parihar et al.
2021/0068829 A1 3/2021 Miller et al.
2021/0068832 A1 3/2021 Yates et al.
2021/0068835 A1 3/2021 Shelton, IV et al.
2021/0077099 A1 3/2021 Shelton, IV et al.
2021/0077100 A1 3/2021 Shelton, IV et al.
2021/0077109 A1 3/2021 Harris et al.
2021/0085313 A1 3/2021 Morgan et al.
2021/0085314 A1 3/2021 Schmid et al.
2021/0085315 A1 3/2021 Aronhalt et al.
2021/0085316 A1 3/2021 Harris et al.
2021/0085317 A1 3/2021 Miller et al.
2021/0085318 A1 3/2021 Swayze et al.
2021/0085320 A1 3/2021 Leimbach et al.
2021/0085321 A1 3/2021 Shelton, IV et al.
2021/0085325 A1 3/2021 Shelton, IV et al.
2021/0085326 A1 3/2021 Vendely et al.
2021/0093321 A1 4/2021 Auld et al.
2021/0093323 A1 4/2021 Scirica et al.
2021/0100541 A1 4/2021 Shelton, IV et al.
2021/0100550 A1 4/2021 Shelton, IV et al.
2021/0100982 A1 4/2021 Laby et al.
2021/0106333 A1 4/2021 Shelton, IV et al.
2021/0107031 A1 4/2021 Bales, Jr. et al.
2021/0121175 A1 4/2021 Yates et al.
2021/0128146 A1 5/2021 Shelton, IV et al.
2021/0128153 A1 5/2021 Sgroi
2021/0137522 A1 5/2021 Shelton, IV et al.
2021/0153866 A1 5/2021 Knapp et al.
2021/0177401 A1 6/2021 Abramek et al.
2021/0177411 A1 6/2021 Williams
2021/0186492 A1 6/2021 Shelton, IV et al.
2021/0186493 A1 6/2021 Shelton, IV et al.
2021/0186494 A1 6/2021 Shelton, IV et al.
2021/0186495 A1 6/2021 Shelton, IV et al.
2021/0186497 A1 6/2021 Shelton, IV et al.
2021/0186498 A1 6/2021 Boudreaux et al.
2021/0186499 A1 6/2021 Shelton, IV et al.
2021/0186500 A1 6/2021 Shelton, IV et al.
2021/0186501 A1 6/2021 Shelton, IV et al.
2021/0186502 A1 6/2021 Shelton, IV et al.
2021/0186504 A1 6/2021 Shelton, IV et al.
2021/0186505 A1 6/2021 Shelton, IV et al.
2021/0186507 A1 6/2021 Shelton, IV et al.
2021/0204941 A1 7/2021 Dewaele et al.
2021/0204951 A1 7/2021 Sgroi et al.
2021/0212671 A1 7/2021 Ramadan et al.
2021/0212691 A1 7/2021 Smith et al.
2021/0212776 A1 7/2021 Schmitt et al.
2021/0219976 A1 7/2021 DiNardo et al.

(56) **References Cited**

U.S. PATENT DOCUMENTS

2021 0228209 A1 7/2021 Shelton, IV et al.
2021/0236117 A1 8/2021 Morgan et al.
2021/0236124 A1 8/2021 Shelton, IV et al.
2021 0244406 A1 8/2021 Kerr et al.
2021/0244407 A1 8/2021 Shelton, IV et al.
2021/0244410 A1 8/2021 Swayze et al.
2021 0244411 A1 8/2021 Smith et al.
2021/0244412 A1 8/2021 Vendely et al.
2021/0259681 A1 8/2021 Shelton, IV et al.
2021 0259687 A1 8/2021 Gonzalez et al.
2021 0259986 A1 8/2021 Widenhouse et al.
2021/0259987 A1 8/2021 Widenhouse et al.
2021/0267589 A1 9/2021 Swayze et al.
2021/0267594 A1 9/2021 Morgan et al.
2021/0267595 A1 9/2021 Posada et al.
2021/0267596 A1 9/2021 Fanelli et al.
2021/0275053 A1 9/2021 Shelton, IV et al.
2021/0275172 A1 9/2021 Harris et al.
2021/0275173 A1 9/2021 Shelton, IV et al.
2021/0275175 A1 9/2021 Vadali et al.
2021 0275176 A1 9/2021 Beckman et al.
2021/0282767 A1 9/2021 Shelton, IV et al.
2021/0282769 A1 9/2021 Baxter, III et al.
2021/0282774 A1 9/2021 Shelton, IV et al.
2021/0282776 A1 9/2021 Overmyer et al.
2021 0290226 A1 9/2021 Mandakolathur Vasudevan et al.
2021/0290231 A1 9/2021 Baxter, III et al.
2021 0290232 A1 9/2021 Harris et al.
2021/0290233 A1 9/2021 Shelton, IV et al.
2021 0290236 A1 9/2021 Moore et al.
2021/0290322 A1 9/2021 Traina
2021 0298745 A1 9/2021 Leimbach et al.
2021 0298746 A1 9/2021 Leimbach et al.
2021 0307744 A1 10/2021 Walcott et al.
2021/0307748 A1 10/2021 Harris et al.
2021/0307754 A1 10/2021 Shelton, IV et al.
2021/0313975 A1 10/2021 Shan et al.
2021/0315566 A1 10/2021 Yates et al.
2021/0315570 A1 10/2021 Shelton, IV
2021/0315571 A1 10/2021 Swayze et al.
2021/0315573 A1 10/2021 Shelton, IV et al.
2021/0315574 A1 10/2021 Shelton, IV et al.
2021/0315576 A1 10/2021 Shelton, IV et al.
2021/0315577 A1 10/2021 Shelton, IV et al.
2021/0322009 A1 10/2021 Huang et al.
2021 0330321 A1 10/2021 Leimbach et al.
2021/0338233 A1 11/2021 Shelton, IV et al.
2021/0338234 A1 11/2021 Shelton, IV et al.
2021/0338260 A1 11/2021 Le Rolland et al.
2021/0353284 A1 11/2021 Yang et al.
2021/0369271 A1 12/2021 Schings et al.
2021 0369273 A1 12/2021 Yates et al.
2021/0378669 A1 12/2021 Shelton, IV et al.
2021/0393260 A1 12/2021 Shelton, IV et al.
2021/0393261 A1 12/2021 Harris et al.
2021/0393262 A1 12/2021 Shelton, IV et al.
2021/0393268 A1 12/2021 Shelton, IV et al.
2021/0393366 A1 12/2021 Shelton, IV et al.
2022/0000478 A1 1/2022 Shelton, IV et al.
2022/0000479 A1 1/2022 Shelton, IV et al.
2022 0015760 A1 1/2022 Beardsley et al.
2022 0031313 A1 2/2022 Bakos et al.
2022 0031314 A1 2/2022 Bakos et al.
2022 0031315 A1 2/2022 Bakos et al.
2022 0031319 A1 2/2022 Witte et al.
2022 0031320 A1 2/2022 Hall et al.
2022 0031322 A1 2/2022 Parks
2022 0031323 A1 2/2022 Witte
2022 0031324 A1 2/2022 Hall et al.
2022 0031345 A1 2/2022 Witte
2022 0031346 A1 2/2022 Parks
2022 0031350 A1 2/2022 Witte
2022 0031351 A1 2/2022 Moubarak et al.
2022 0049593 A1 2/2022 Groover et al.
2022 0054125 A1 2/2022 Ji et al.
2022/0054130 A1 2/2022 Overmyer et al.
2022/0061642 A1 3/2022 Park et al.
2022/0061836 A1 3/2022 Parihar et al.
2022/0061843 A1 3/2022 Vendely et al.
2022/0061845 A1 3/2022 Shelton, IV et al.
2022/0061862 A1 3/2022 Shelton, IV et al.
2022/0071630 A1 3/2022 Swayze et al.
2022/0071631 A1 3/2022 Harris et al.
2022/0071632 A1 3/2022 Patel et al.
2022/0071635 A1 3/2022 Shelton, IV et al.
2022/0079580 A1 3/2022 Vendely et al.
2022/0079586 A1 3/2022 Shelton, IV et al.
2022/0079588 A1 3/2022 Harris et al.
2022/0079589 A1 3/2022 Harris et al.
2022/0079590 A1 3/2022 Harris et al.
2022/0079595 A1 3/2022 Huitema et al.
2022/0079596 A1 3/2022 Huitema et al.
2022/0087676 A1 3/2022 Shelton, IV et al.
2022/0104816 A1 4/2022 Fernandes et al.
2022/0104820 A1 4/2022 Shelton, IV et al.
2022/0117602 A1 4/2022 Wise et al.
2022/0133299 A1 5/2022 Baxter, III
2022/0133300 A1 5/2022 Leimbach et al.
2022/0133301 A1 5/2022 Leimbach
2022/0133302 A1 5/2022 Zerkle et al.
2022/0133303 A1 5/2022 Huang
2022/0133304 A1 5/2022 Leimbach et al.
2022/0133310 A1 5/2022 Ross
2022/0133311 A1 5/2022 Huang
2022/0133312 A1 5/2022 Huang
2022/0133427 A1 5/2022 Baxter, III
2022/0133428 A1 5/2022 Leimbach et al.
2022/0142643 A1 5/2022 Shelton, IV et al.
2022/0151611 A1 5/2022 Shelton, IV et al.
2022/0151613 A1 5/2022 Vendely et al.
2022/0151614 A1 5/2022 Vendely et al.
2022/0151615 A1 5/2022 Shelton, IV et al.
2022/0151616 A1 5/2022 Shelton, IV et al.
2022/0160358 A1 5/2022 Wixey
2022/0167968 A1 6/2022 Worthington et al.
2022/0167970 A1 6/2022 Aronhalt et al.
2022/0167971 A1 6/2022 Shelton, IV et al.
2022/0167972 A1 6/2022 Shelton, IV et al.
2022/0167973 A1 6/2022 Shelton, IV et al.
2022/0167974 A1 6/2022 Shelton, IV et al.
2022/0167975 A1 6/2022 Shelton, IV et al.
2022/0167977 A1 6/2022 Shelton, IV et al.
2022/0167979 A1 6/2022 Yates et al.
2022/0167980 A1 6/2022 Shelton, IV et al.
2022/0167981 A1 6/2022 Shelton, IV et al.
2022/0167982 A1 6/2022 Shelton, IV et al.
2022/0167983 A1 6/2022 Shelton, IV et al.
2022/0167984 A1 6/2022 Shelton, IV et al.
2022/0167995 A1 6/2022 Parfett et al.
2022/0168038 A1 6/2022 Shelton, IV et al.
2022/0175370 A1 6/2022 Shelton, IV et al.
2022/0175371 A1 6/2022 Hess et al.
2022/0175372 A1 6/2022 Shelton, IV et al.
2022/0175375 A1 6/2022 Harris et al.
2022/0175378 A1 6/2022 Leimbach et al.
2022/0175381 A1 6/2022 Scheib et al.
2022/0183685 A1 6/2022 Shelton, IV et al.
2022/0211367 A1 7/2022 Schmid et al.
2022/0218332 A1 7/2022 Shelton, IV et al.
2022/0218333 A1 7/2022 Parihar et al.
2022/0218334 A1 7/2022 Parihar et al.
2022/0218336 A1 7/2022 Timm et al.
2022/0218337 A1 7/2022 Timm et al.
2022/0218338 A1 7/2022 Shelton, IV et al.
2022/0218340 A1 7/2022 Harris et al.
2022/0218344 A1 7/2022 Leimbach et al.
2022/0218345 A1 7/2022 Shelton, IV et al.
2022/0218346 A1 7/2022 Shelton, IV et al.
2022/0218347 A1 7/2022 Shelton, IV et al.
2022/0218348 A1 7/2022 Swensgard et al.
2022/0218349 A1 7/2022 Shelton, IV et al.
2022/0218350 A1 7/2022 Shelton, IV et al.
2022/0218351 A1 7/2022 Shelton, IV et al.
2022/0218376 A1 7/2022 Shelton, IV et al.

(56) **References Cited**

U.S. PATENT DOCUMENTS

2022/0218378 A1 7/2022 Shelton, IV et al.
2022/0218381 A1 7/2022 Leimbach et al.
2022/0218382 A1 7/2022 Leimbach et al.
2022/0225980 A1 7/2022 Shelton, IV et al.
2022/0225981 A1 7/2022 Shelton, IV et al.
2022/0225982 A1 7/2022 Yates et al.
2022/0225986 A1 7/2022 Shelton, IV et al.
2022/0225992 A1 7/2022 Smith et al.
2022/0225993 A1 7/2022 Huitema et al.
2022/0225994 A1 7/2022 Setser et al.
2022/0226012 A1 7/2022 Shelton, IV et al.
2022/0226013 A1 7/2022 Hall et al.
2022/0233184 A1 7/2022 Parihar et al.
2022/0233185 A1 7/2022 Parihar et al.
2022/0233186 A1 7/2022 Timm et al.
2022/0233187 A1 7/2022 Timm et al.
2022/0233188 A1 7/2022 Timm et al.
2022/0233194 A1 7/2022 Baxter, III et al.
2022/0233195 A1 7/2022 Shelton, IV et al.
2022/0233257 A1 7/2022 Shelton, IV et al.
2022/0240927 A1 8/2022 Timm et al.
2022/0240928 A1 8/2022 Timm et al.
2022/0240929 A1 8/2022 Timm et al.
2022/0240930 A1 8/2022 Yates et al.
2022/0240936 A1 8/2022 Huitema et al.
2022/0240937 A1 8/2022 Shelton, IV et al.
2022/0249095 A1 8/2022 Shelton, IV et al.
2022/0265272 A1 8/2022 Li et al.
2022/0273291 A1 9/2022 Shelton, IV et al.
2022/0273292 A1 9/2022 Shelton, IV et al.
2022/0273293 A1 9/2022 Shelton, IV et al.
2022/0273294 A1 9/2022 Creamer et al.
2022/0273299 A1 9/2022 Shelton, IV et al.
2022/0273300 A1 9/2022 Shelton, IV et al.
2022/0273301 A1 9/2022 Creamer et al.
2022/0273302 A1 9/2022 Shelton, IV et al.
2022/0273303 A1 9/2022 Creamer et al.
2022/0273304 A1 9/2022 Shelton, IV et al.
2022/0273305 A1 9/2022 Shelton, IV et al.
2022/0273306 A1 9/2022 Shelton, IV et al.
2022/0273307 A1 9/2022 Shelton, IV et al.
2022/0273308 A1 9/2022 Shelton, IV et al.
2022/0278438 A1 9/2022 Shelton, IV et al.
2022/0287711 A1 9/2022 Ming et al.
2022/0296230 A1 9/2022 Adams et al.
2022/0296231 A1 9/2022 Adams et al.
2022/0296232 A1 9/2022 Adams et al.
2022/0296233 A1 9/2022 Morgan et al.
2022/0296234 A1 9/2022 Shelton, IV et al.
2022/0296235 A1 9/2022 Morgan et al.
2022/0296236 A1 9/2022 Bakos et al.
2022/0296237 A1 9/2022 Bakos et al.
2022/0304679 A1 9/2022 Bakos et al.
2022/0304680 A1 9/2022 Shelton, IV et al.
2022/0304681 A1 9/2022 Shelton, IV et al.
2022/0304682 A1 9/2022 Shelton, IV et al.
2022/0304683 A1 9/2022 Shelton, IV et al.
2022/0304684 A1 9/2022 Bakos et al.
2022/0304685 A1 9/2022 Sakos et al.
2022/0304686 A1 9/2022 Shelton, IV et al.
2022/0304687 A1 9/2022 Shelton, IV et al.
2022/0304688 A1 9/2022 Shelton, IV et al.
2022/0304689 A1 9/2022 Shelton, IV
2022/0304690 A1 9/2022 Baxter, III et al.
2022/0304714 A1 9/2022 Shelton, IV et al.
2022/0304715 A1 9/2022 Shelton, IV
2022/0313253 A1 10/2022 Shelton, IV et al.
2022/0313263 A1 10/2022 Huitema et al.
2022/0313619 A1 10/2022 Schmid et al.
2022/0323067 A1 10/2022 Overmyer et al.
2022/0323070 A1 10/2022 Ross et al.
2022/0330940 A1 10/2022 Shelton, IV et al.
2022/0338870 A1 10/2022 Swayze et al.
2022/0346774 A1 11/2022 Hess et al.
2022/0346775 A1 11/2022 Hess et al.
2022/0354493 A1 11/2022 Shelton, IV et al.
2022/0354495 A1 11/2022 Baxter, III et al.
2022/0361879 A1 11/2022 Baxter, III et al.
2022/0370069 A1 11/2022 Simms et al.
2022/0378418 A1 12/2022 Huang et al.
2022/0378420 A1 12/2022 Leimbach et al.
2022/0378424 A1 12/2022 Huang et al.
2022/0378425 A1 12/2022 Huang et al.
2022/0378426 A1 12/2022 Huang et al.
2022/0378427 A1 12/2022 Huang et al.
2022/0378428 A1 12/2022 Shelton, IV et al.
2022/0378435 A1 12/2022 Dholakia et al.
2022/0387030 A1 12/2022 Shelton, IV et al.
2022/0387031 A1 12/2022 Yates et al.
2022/0387032 A1 12/2022 Huitema et al.
2022/0387033 A1 12/2022 Huitema et al.
2022/0387034 A1 12/2022 Huitema et al.
2022/0387035 A1 12/2022 Huitema et al.
2022/0387036 A1 12/2022 Huitema et al.
2022/0387037 A1 12/2022 Huitema et al.
2022/0387038 A1 12/2022 Huitema et al.
2022/0387125 A1 12/2022 Leimbach et al.

FOREIGN PATENT DOCUMENTS

AU 2012268848 A1 1/2013
AU 2011218702 B2 6/2013
AU 2012200178 B2 7/2013
BR 112013007744 A2 6/2016
BR 112013027777 A2 1/2017
CA 1015829 A 8/1977
CA 1125615 A 6/1982
CA 2520413 A1 3/2007
CA 2725181 A1 11/2007
CA 2851239 A1 11/2007
CA 2664874 A1 11/2009
CA 2813230 A1 4/2012
CA 2940510 A1 8/2015
CA 2698728 C 8/2016
CN 1163558 A 10/1997
CN 2488482 Y 5/2002
CN 1634601 A 7/2005
CN 2716900 Y 8/2005
CN 2738962 Y 11/2005
CN 1777406 A 5/2006
CN 2785249 Y 5/2006
CN 2796654 Y 7/2006
CN 2868212 Y 2/2007
CN 200942099 Y 9/2007
CN 200984209 Y 12/2007
CN 200991269 Y 12/2007
CN 201001747 Y 1/2008
CN 101143105 A 3/2008
CN 201029899 Y 3/2008
CN 101188900 A 5/2008
CN 101203085 A 6/2008
CN 101273908 A 10/2008
CN 101378791 A 3/2009
CN 101507635 A 8/2009
CN 101522120 A 9/2009
CN 101669833 A 3/2010
CN 101716090 A 6/2010
CN 101721236 A 6/2010
CN 101756727 A 6/2010
CN 101828940 A 9/2010
CN 101856250 A 10/2010
CN 101873834 A 10/2010
CN 201719298 U 1/2011
CN 102038532 A 5/2011
CN 201879759 U 6/2011
CN 201949071 U 8/2011
CN 102217961 A 10/2011
CN 102217963 A 10/2011
CN 102243850 A 11/2011
CN 102247182 A 11/2011
CN 102247183 A 11/2011
CN 101779977 B 12/2011
CN 102309352 A 1/2012
CN 101912284 B 7/2012

(56) **References Cited**

FOREIGN PATENT DOCUMENTS

CN	102125450	B	7/2012
CN	202313537	U	7/2012
CN	202397539	U	8/2012
CN	202426586	U	9/2012
CN	102743201	A	10/2012
CN	202489990	U	10/2012
CN	102228387	B	11/2012
CN	102835977	A	12/2012
CN	202568350	U	12/2012
CN	103037781	A	4/2013
CN	103083053	A	5/2013
CN	103391037	A	11/2013
CN	203328751	U	12/2013
CN	103505264	A	1/2014
CN	103584893	A	2/2014
CN	103635150	A	3/2014
CN	103690212	A	4/2014
CN	103764046	A	4/2014
CN	203564285	U	4/2014
CN	203564287	U	4/2014
CN	203597997	U	5/2014
CN	103829981	A	6/2014
CN	103829983	A	6/2014
CN	103860221	A	6/2014
CN	103908313	A	7/2014
CN	203693685	U	7/2014
CN	203736251	U	7/2014
CN	103981635	A	8/2014
CN	104027145	A	9/2014
CN	203815517	U	9/2014
CN	102783741	B	10/2014
CN	102973300	B	10/2014
CN	204092074	U	1/2015
CN	104337556	A	2/2015
CN	204158440	U	2/2015
CN	204158441	U	2/2015
CN	102469995	B	3/2015
CN	104422849	A	3/2015
CN	104586463	A	5/2015
CN	204520822	U	8/2015
CN	204636451	U	9/2015
CN	103860225	B	3/2016
CN	103750872	B	5/2016
CN	105682566	A	6/2016
CN	105919642	A	9/2016
CN	103648410	B	10/2016
CN	105997173	A	10/2016
CN	106344091	A	1/2017
CN	104921730	B	9/2017
CN	104349800	B	11/2017
CN	107635483	A	1/2018
CN	208625784	U	3/2019
DE	273689	C	5/1914
DE	1775926	A	1/1972
DE	3036217	A1	4/1982
DE	3210466	A1	9/1983
DE	3709067	A1	9/1988
DE	19534043	A1	3/1997
DE	19851291	A1	1/2000
DE	19924311	A1	11/2000
DE	20016423	U1	2/2001
DE	20112837	U1	10/2001
DE	20121753	U1	4/2003
DE	202004012389	U1	9/2004
DE	10314072	A1	10/2004
DE	102004014011	A1	10/2005
DE	102004041871	A1	3/2006
DE	102004063606	A1	7/2006
DE	202007003114	U1	6/2007
DE	102010013150	A1	9/2011
DE	102012213322	A1	1/2014
DE	102013101158	A1	8/2014
EM	1558161	A1	8/2005
EM	002220467-00		4/2013
EP	0000756	A1	2/1979
EP	0122046	A1	10/1984
EP	0129442	B1	11/1987
EP	0251444	A1	1/1988
EP	0255631	A1	2/1988
EP	0169044	B1	6/1991
EP	0541950	A1	5/1993
EP	0548998	A1	6/1993
EP	0594148	A1	4/1994
EP	0646357	A1	4/1995
EP	0505036	B1	5/1995
EP	0669104	A1	8/1995
EP	0516544	B1	3/1996
EP	0705571	A1	4/1996
EP	0528478	B1	5/1996
EP	0770355	A1	5/1997
EP	0625335	B1	11/1997
EP	0879742	A1	11/1998
EP	0650701	B1	3/1999
EP	0923907	A1	6/1999
EP	0484677	B2	7/2000
EP	1034747	A1	9/2000
EP	1034748	A1	9/2000
EP	0726632	B1	10/2000
EP	1053719	A1	11/2000
EP	1055399	A1	11/2000
EP	1055400	A1	11/2000
EP	1064882	A1	1/2001
EP	1080694	A1	3/2001
EP	1090592	A1	4/2001
EP	1095627	A1	5/2001
EP	0806914	B1	9/2001
EP	1234587	A1	8/2002
EP	1284120	A1	2/2003
EP	0717967	B1	5/2003
EP	0869742	B1	5/2003
EP	1374788	A1	1/2004
EP	1407719	A2	4/2004
EP	0996378	B1	6/2004
EP	1157666	B1	9/2005
EP	0880338	B1	10/2005
EP	1158917	B1	11/2005
EP	1344498	B1	11/2005
EP	1330989	B1	12/2005
EP	1632191	A2	3/2006
EP	1082944	B1	5/2006
EP	1253866	B1	7/2006
EP	1723914	A1	11/2006
EP	1285633	B1	12/2006
EP	1011494	B1	1/2007
EP	1767163	A1	3/2007
EP	1837041	A1	9/2007
EP	0922435	B1	10/2007
EP	1599146	B1	10/2007
EP	1330201	B1	6/2008
EP	2039302	A2	3/2009
EP	1719461	B1	6/2009
EP	2116196	A2	11/2009
EP	2153793	A2	2/2010
EP	1769754	B1	6/2010
EP	1627605	B1	12/2010
EP	2316345	A1	5/2011
EP	1962711	B1	2/2012
EP	2486862	A2	8/2012
EP	2486868	A2	8/2012
EP	2517638	A1	10/2012
EP	2529671	A2	12/2012
EP	2606812	A1	6/2013
EP	2649948	A1	10/2013
EP	2649949	A1	10/2013
EP	2668910	A2	12/2013
EP	2687164	A2	1/2014
EP	2713902	A1	4/2014
EP	2743042	A2	6/2014
EP	2764827	A2	8/2014
EP	2777524	A2	9/2014
EP	2789299	A1	10/2014
EP	2842500	A1	3/2015
EP	2853220	A1	4/2015
EP	2878274	A1	6/2015

(56) **References Cited**

FOREIGN PATENT DOCUMENTS

EP	2298220	B1	6/2016
EP	2510891	B1	6/2016
EP	3031404	A1	6/2016
EP	3047806	A1	7/2016
EP	3078334	A1	10/2016
EP	2364651	B1	11/2016
EP	2747235	B1	11/2016
EP	3095399	A2	11/2016
EP	3120781	A2	1/2017
EP	3135225	A2	3/2017
EP	2789299	B1	5/2017
EP	3225190	A2	10/2017
EP	3235445	A1	10/2017
EP	3326548	A1	5/2018
EP	3363378	A1	8/2018
EP	3409216	A1	12/2018
EP	3476301	A1	5/2019
EP	3476334	A1	5/2019
EP	3275378	B1	7/2019
EP	3505095	A1	7/2019
EP	3791810	A1	3/2021
ES	1070456	U	9/2009
FR	459743	A	11/1913
FR	999646	A	2/1952
FR	1112936	A	3/1956
FR	2598905	A1	11/1987
FR	2689749	B1	7/1994
FR	2765794	A1	1/1999
FR	2815842	A1	5/2002
GB	939929	A	10/1963
GB	1210522	A	10/1970
GB	1217159	A	12/1970
GB	1339394	A	12/1973
GB	2024012	A	1/1980
GB	2109241	A	6/1983
GB	2090534	B	6/1984
GB	2272159	A	5/1994
GB	2336214	A	10/1999
GB	2509523	A	7/2014
GR	930100110	A	11/1993
JP	S4711908	Y1	5/1972
JP	S5033988	U	4/1975
JP	S5367286	A	6/1978
JP	S56112235	A	9/1981
JP	S60113007	A	6/1985
JP	S62170011	U	10/1987
JP	S6333137	A	2/1988
JP	S63270040	A	11/1988
JP	S63318824	A	12/1988
JP	H0129503	B2	6/1989
JP	H02106189	A	4/1990
JP	H0378514	U	8/1991
JP	H0385009	U	8/1991
JP	H0489041	A	3/1992
JP	H04215747	A	8/1992
JP	H04131860	U	12/1992
JP	H0584252	A	4/1993
JP	H05123325	A	5/1993
JP	H05226945	A	9/1993
JP	H0630945	A	2/1994
JP	H0636757	A	2/1994
JP	H06237937	A	8/1994
JP	H06304176	A	11/1994
JP	H06327684	A	11/1994
JP	H079622	U	2/1995
JP	H07124166	A	5/1995
JP	H07163573	A	6/1995
JP	H07255735	A	10/1995
JP	H07285089	A	10/1995
JP	H0833642	A	2/1996
JP	H08164141	A	6/1996
JP	H08182684	A	7/1996
JP	H08507708	A	8/1996
JP	H08229050	A	9/1996
JP	H08289895	A	11/1996
JP	H0950795	A	2/1997
JP	H09-323068	A	12/1997
JP	H10118090	A	5/1998
JP	H10-200699	A	7/1998
JP	H10296660	A	11/1998
JP	2000014632	A	1/2000
JP	2000033071	A	2/2000
JP	2000112002	A	4/2000
JP	2000166932	A	6/2000
JP	2000171730	A	6/2000
JP	2000210299	A	8/2000
JP	2000271141	A	10/2000
JP	2000287987	A	10/2000
JP	2000325303	A	11/2000
JP	2001-69758	A	3/2001
JP	2001087272	A	4/2001
JP	2001208655	A	8/2001
JP	2001514541	A	9/2001
JP	2001276091	A	10/2001
JP	2002051974	A	2/2002
JP	2002054903	A	2/2002
JP	2002085415	A	3/2002
JP	2002143078	A	5/2002
JP	2002153481	A	5/2002
JP	2002528161	A	9/2002
JP	2002314298	A	10/2002
JP	2003135473	A	5/2003
JP	2003521301	A	7/2003
JP	3442423	B2	9/2003
JP	2003300416	A	10/2003
JP	2004147701	A	5/2004
JP	2004162035	A	6/2004
JP	2004229976	A	8/2004
JP	2005013573	A	1/2005
JP	2005080702	A	3/2005
JP	2005131163	A	5/2005
JP	2005131164	A	5/2005
JP	2005131173	A	5/2005
JP	2005131211	A	5/2005
JP	2005131212	A	5/2005
JP	2005137423	A	6/2005
JP	2005187954	A	7/2005
JP	2005211455	A	8/2005
JP	2005328882	A	12/2005
JP	2005335432	A	12/2005
JP	2005342267	A	12/2005
JP	3791856	B2	6/2006
JP	2006187649	A	7/2006
JP	2006218228	A	8/2006
JP	2006281405	A	10/2006
JP	2006291180	A	10/2006
JP	2006346445	A	12/2006
JP	2007-97252	A	4/2007
JP	2007289715	A	11/2007
JP	2007304057	A	11/2007
JP	2007306710	A	11/2007
JP	D1322057		2/2008
JP	2008154804	A	7/2008
JP	2008220032	A	9/2008
JP	2009507526	A	2/2009
JP	2009189838	A	8/2009
JP	2009189846	A	8/2009
JP	2009207260	A	9/2009
JP	2009226028	A	10/2009
JP	2009538684	A	11/2009
JP	2009539420	A	11/2009
JP	D1383743		2/2010
JP	2010065594	A	3/2010
JP	2010069307	A	4/2010
JP	2010069310	A	4/2010
JP	2010098844	A	4/2010
JP	2010214128	A	9/2010
JP	2011072574	A	4/2011
JP	4722849	B2	7/2011
JP	4728996	B2	7/2011
JP	2011524199	A	9/2011
JP	2011200665	A	10/2011
JP	D1432094		12/2011
JP	1433631	S	2/2012

(56) **References Cited**

FOREIGN PATENT DOCUMENTS

JP	2012115542	A	6/2012
JP	2012143283	A	8/2012
JP	5154710	B1	2/2013
JP	2013099551	A	5/2013
JP	2013126430	A	6/2013
JP	2013541982	A	11/2013
JP	2013541983	A	11/2013
JP	2013541997	A	11/2013
JP	2014018667	A	2/2014
JP	D1481426		2/2014
JP	D1492363		2/2014
JP	2014121599	A	7/2014
JP	2014171879	A	9/2014
JP	1517663	S	2/2015
JP	2015512725	A	4/2015
JP	2015513956	A	5/2015
JP	2015513958	A	5/2015
JP	2015514471	A	5/2015
JP	2015516838	A	6/2015
JP	2015521524	A	7/2015
JP	2015521525	A	7/2015
JP	2016007800	A	1/2016
JP	2016508792	A	3/2016
JP	2016512057	A	4/2016
JP	2016518914	A	6/2016
JP	2016530949	A	10/2016
JP	2017513563	A	6/2017
JP	1601498	S	4/2018
JP	2019513530	A	5/2019
JP	2020501797	A	1/2020
JP	D1677030	S	1/2021
JP	D1696539	S	10/2021
KR	20100110134	A	10/2010
KR	20110003229	A	1/2011
KR	300631507		3/2012
KR	300747646		6/2014
KR	20180053811	A	5/2018
RU	1814161	C	5/1993
RU	2008830	C1	3/1994
RU	2052979	C1	1/1996
RU	2066128	C1	9/1996
RU	2069981	C1	12/1996
RU	2098025	C1	12/1997
RU	2104671	C1	2/1998
RU	2110965	C1	5/1998
RU	2141279	C1	11/1999
RU	2144791	C1	1/2000
RU	2161450	C1	1/2001
RU	2181566	C2	4/2002
RU	2187249	C2	8/2002
RU	32984	U1	10/2003
RU	2225170	C2	3/2004
RU	42750	U1	12/2004
RU	61114	U1	2/2007
RU	61122	U1	2/2007
RU	2430692	C2	10/2011
SU	189517	A	1/1967
SU	297156	A	5/1971
SU	328636	A	9/1972
SU	511939	A1	4/1976
SU	674747	A1	7/1979
SU	728848	A1	4/1980
SU	1009439	A	4/1983
SU	1042742	A1	9/1983
SU	1271497	A1	11/1986
SU	1333319	A2	8/1987
SU	1377052	A1	2/1988
SU	1377053	A1	2/1988
SU	1443874	A1	12/1988
SU	1509051	A1	9/1989
SU	1561964	A1	5/1990
SU	1708312	A1	1/1992
SU	1722476	A1	3/1992
SU	1752361	A1	8/1992
SU	1814161	A1	5/1993
WO	WO-9308754	A1	5/1993
WO	WO-9315648	A1	8/1993
WO	WO-9420030	A1	9/1994
WO	WO-9517855	A1	7/1995
WO	WO-9520360	A1	8/1995
WO	WO-9623448	A1	8/1996
WO	WO-9635464	A1	11/1996
WO	WO-9639086	A1	12/1996
WO	WO-9639088	A1	12/1996
WO	WO-9724073	A1	7/1997
WO	WO-9734533	A1	9/1997
WO	WO-9827870	A1	7/1998
WO	WO-9903407	A1	1/1999
WO	WO-9903409	A1	1/1999
WO	WO-9948430	A1	9/1999
WO	WO-0024322	A1	5/2000
WO	WO-0024330	A1	5/2000
WO	WO-0036690	A2	6/2000
WO	WO-0053112	A2	9/2000
WO	WO-0024448	A2	10/2000
WO	WO-0057796	A1	10/2000
WO	WO-0105702	A1	1/2001
WO	WO-0154594	A1	8/2001
WO	WO-0158371	A1	8/2001
WO	WO-0162164	A2	8/2001
WO	WO-0162169	A2	8/2001
WO	WO-0191646	A1	12/2001
WO	WO-0219932	A1	3/2002
WO	WO-0226143	A1	4/2002
WO	WO-0236028	A1	5/2002
WO	WO-02065933	A2	8/2002
WO	WO-03055402	A1	7/2003
WO	WO-03094747	A1	11/2003
WO	WO-03079909	A3	3/2004
WO	WO-2004019803	A1	3/2004
WO	WO-2004032783	A1	4/2004
WO	WO-2004047626	A1	6/2004
WO	WO-2004047653	A2	6/2004
WO	WO-2004056277	A1	7/2004
WO	WO-2004078050	A2	9/2004
WO	WO-2004078051	A2	9/2004
WO	WO-2004096015	A2	11/2004
WO	WO-2006044581	A2	4/2006
WO	WO-2006051252	A1	5/2006
WO	WO-2006059067	A1	6/2006
WO	WO-2006073581	A2	7/2006
WO	WO-2006085389	A1	8/2006
WO	WO-2007015971	A2	2/2007
WO	WO-2007074430	A1	7/2007
WO	WO-2007129121	A1	11/2007
WO	WO-2007137304	A2	11/2007
WO	WO-2007142625	A2	12/2007
WO	WO-2008021969	A2	2/2008
WO	WO-2008061566	A1	5/2008
WO	WO-2008089404	A2	7/2008
WO	WO-2009005969	A2	1/2009
WO	WO-2009067649	A2	5/2009
WO	WO-2009091497	A2	7/2009
WO	WO-2010126129	A1	11/2010
WO	WO-2010134913	A1	11/2010
WO	WO-2011008672	A2	1/2011
WO	WO-2011044343	A2	4/2011
WO	WO-2012006306	A2	1/2012
WO	WO-2012013577	A1	2/2012
WO	WO-2012044606	A2	4/2012
WO	WO-2012061725	A1	5/2012
WO	WO-2012072133	A1	6/2012
WO	WO-2012166503	A1	12/2012
WO	WO-2013087092	A1	6/2013
WO	WO-2013151888	A1	10/2013
WO	WO-2014004209	A2	1/2014
WO	WO-2014113438	A1	7/2014
WO	WO-2014175894	A1	10/2014
WO	WO-2015032797	A1	3/2015
WO	WO-2015076780	A1	5/2015
WO	WO-2015137040	A1	9/2015
WO	WO-2015138760	A1	9/2015
WO	WO-2015187107	A1	12/2015
WO	WO-2016100682	A1	6/2016

(56) **References Cited**

FOREIGN PATENT DOCUMENTS

WO	WO-2016107448 A1	7/2016
WO	WO-2017138905 A1	8/2017
WO	WO-2018011664 A1	1/2018
WO	WO-2019036490 A1	2/2019
WO	WO-2019130087 A1	7/2019
WO	WO-2019130089 A1	7/2019
WO	WO-2019208902 A1	10/2019
WO	WO-2021189234 A1	9/2021

OTHER PUBLICATIONS

ASTM procedure D2240-05, "Standard Test Method for Rubber Property-Durometer Hardness," (Published Apr. 2010).

Van Meer et al., "A Disposable Plastic Compact Wrist for Smart Minimally Invasive Surgical Tools," LAAS/CNRS (Aug. 2005).

Breedveld et al., "A New, Easily Miniaturized Sterrable Endoscope," IEEE Engineering in Medicine and Biology Magazine (Nov./Dec. 2005).

Disclosed Anonymously, "Motor-Driven Surgical Stapler Improvements," Research Disclosure Database No. 526041, Published: Feb. 2008.

B.R. Coolman, DVM, MS et al., "Comparison of Skin Staples With Sutures for Anastomosis of the Small Intestine in Dogs," Abstract; http: /www.blackwell-synergy.com/doi/abs/10.1053/jvet.2000.7539?cookieSet=1&journalCode=vsu which redirects to http://www3.interscience.wiley.com/journal/119040681/abstract?CRETRY=1&SRETRY=0; [online] accessed: Sep. 22, 2008 (2 pages).

D. Tuite, Ed., "Get the Lowdown on Ultracapacitors," Nov. 15, 2007; [online] URL: http://electronicdesign.com/Articles/Print.cfm?ArticleID=17465, accessed Jan. 15, 2008 (5 pages).

Datasheet for Panasonic TK Relays Ultra Low Profile 2 A Polarized Relay, Copyright Matsushita Electric Works, Ltd. (Known of at least as early as Aug. 17, 2010), 5 pages.

Schellhammer et al., "Poly-Lactic-Acid for Coating of Endovascular Stents: Preliminary Results in Canine Experimental Av-Fistulae," Mat.-wiss. u. Werkstofftech., 32, pp. 193-199 (2001).

Miyata et al., "Biomolecule-Sensitive Hydrogels," Advanced Drug Delivery Reviews, 54 (2002) pp. 79-98.

Jeong et al., "Thermosensitive Sol-Gel Reversible Hydrogels," Advanced Drug Delivery Reviews, 54 (2002) pp. 37-51.

Covidien Brochure, "Endo GIA™ Ultra Universal Stapler," (2010), 2 pages.

Qiu et al., "Environment-Sensitive Hydrogels for Drug Delivery," Advanced Drug Delivery Reviews, 53 (2001) pp. 321-339.

Hoffman, "Hydrogels for Biomedical Applications," Advanced Drug Delivery Reviews, 43 (2002) pp. 3-12.

Hoffman, "Hydrogels for Biomedical Applications," Advanced Drug Delivery Reviews, 54 (2002) pp. 3-12.

Peppas, "Physiologically Responsive Hydrogels," Journal of Bioactive and Compatible Polymers, vol. 6 (Jul. 1991) pp. 241-246.

Peppas, Editor "Hydrogels in Medicine and Pharmacy," vol. I, Fundamentals, CRC Press, 1986.

Young, "Microcellular foams via phase separation," Journal of Vacuum Science & Technology A 4(3), (May/Jun. 1986).

Ebara, "Carbohydrate-Derived Hydrogels and Microgels," Engineered Carbohydrate-Based Materials for Biomedical Applications: Polymers, Surfaes, Dendrimers, Nanoparticles, and Hydrogels, Edited by Ravin Narain, 2011, pp. 337-345.

http: ninpgan.net publications/51-100/89.pdf; 2004, Ning Pan, On Uniqueness of Fibrous Materials, Design & Nature II. Eds: Colins, M. and Brebbia, C. WIT Press, Boston, 493-504.

Solorio et al., "Gelatin Microspheres Crosslinked with Genipin for Local Delivery of Growth Factors," J. Tissue Eng. Regen. Med. (2010), 4(7): pp. 514-523.

Covidien iDrive™ Ultra in Service Reference Card, "iDrive™ Ultra Powered Stapling Device," (4 pages).

Covidien iDrive™ Ultra Powered Stapling System ibrochure, "The Power of iDrive™ Ultra Powered Stapling System and Tri-Staple™ Technology," (23 pages).

Covidien "iDrive™ Ultra Powered Stapling System, A Guide for Surgeons," (6 pages).

Covidien "iDrive™ Ultra Powered Stapling System, Cleaning and Sterilization Guide," (2 pages).

Covidien Brochure "iDrive™ Ultra Powered Stapling System," (6 pages).

Covidien Brochure, "Endo GIA™ Reloads with Tri-Staple™ Technology," (2010), 1 page.

Covidien Brochure, "Endo GIA™ Reloads with Tri-Staple™ Technology and Endo GIA™ Ultra Universal Staplers," (2010), 2 pages.

Covidien Brochure, "Endo GIA™ Curved Tip Reload with Tri-Staple™ Technology," (2012), 2 pages.

Covidien Brochure, "Endo GIA™ Reloads with Tri-Staple™ Technology," (2010), 2 pages.

Pitt et al., "Attachment of Hyaluronan to Metallic Surfaces," J. Biomed. Mater. Res. 68A: pp. 95-106, 2004.

Indian Standard: Automotive Vehicles—Brakes and Braking Systems (IS 11852-1:2001), Mar. 1, 2001.

Patrick J. Sweeney: "RFID for Dummies", Mar. 11, 2010, pp. 365-365, XP055150775, ISBN: 978-1-11-805447-5, Retrieved from the Internet: URL: books.google.de/books?isbn=1118054474 [retrieved on Nov. 4, 2014]—book not attached.

Allegro MicroSystems, LLC, Automotive Full Bridge MOSFET Driver, A3941-DS, Rev. 5, 21 pages, http://www.allegromicro.com ~/media/Files/Datasheets/A3941-Datasheet.ashx?la=en.

Data Sheet of LM4F230H5QR, 2007.

Seils et al., Covidien Summary: Clinical Study "UCONN Biodynamics: Final Report on Results," (2 pages).

Byrne et al., "Molecular Imprinting Within Hydrogels," Advanced Drug Delivery Reviews, 54 (2002) pp. 149-161.

Fast, Versatile Blackfin Processors Handle Advanced RFID Reader Applications; Analog Dialogue: vol. 40—Sep. 2006; http://www.analog.com/library/analogDialogue/archives/40-09/rfid.pdf; Wayback Machine to Feb. 15, 2012.

Chen et al., "Elastomeric Biomaterials for Tissue Engineering," Progress in Polymer Science 38 (2013), pp. 584-671.

Matsuda, "Thermodynamics of Formation of Porous Polymeric Membrane from Solutions," Polymer Journal, vol. 23, No. 5, pp. 435-444 (1991).

Covidien Brochure, "Endo GIA™ Black Reload with Tri-Staple™ Technology," (2012), 2 pages.

Biomedical Coatings, Fort Wayne Metals, Research Products Corporation, obtained online at www.fwmetals.com on Jun. 21, 2010 (1 page).

The Sodem Aseptic Battery Transfer Kit, Sodem Systems, 2000, 3 pages.

C.C. Thompson et al., "Peroral Endoscopic Reduction of Dilated Gastrojejunal Anastomosis After Roux-en-Y Gastric Bypass: A Possible New Option for Patients with Weight Regain," Surg Endosc (2006) vol. 20., pp. 1744-1748.

Serial Communication Protocol; Michael Lemmon Feb. 1, 2009; http://www3.nd.edu/~lemmon/courses/ee224/web-manual web-manual/lab12/node2.html; Wayback Machine to Apr. 29, 2012.

Lyon et al. "The Relationship Between Current Load and Temperature for Quasi-Steady State and Transient Conditions," SPIE—International Society for Optical Engineering. Proceedings, vol. 4020, (pp. 62-70), Mar. 30, 2000.

Anonymous: "Sense & Control Application Note Current Sensing Using Linear Hall Sensors," Feb. 3, 2009, pp. 1-18. Retrieved from the Internet: URL: http://www.infineon.com/dgdl/Current Sensing Rev.1.1.pdf?fileId db3a304332d040720132d939503e5f17 [retrieved on Oct. 18, 2016].

Mouser Electronics, "LM317M 3—Terminal Adjustable Regulator with Overcurrent/Overtemperature Self Protection", Mar. 31, 2014 (Mar. 31, 2014), XP0555246104, Retrieved from the Internet: URL: http://www.mouser.com/ds/2/405/lm317m-440423.pdf, pp. 1-8.

Mouser Electronics, "LM317 3-Terminal Adjustable Regulator with Overcurrent/Overtemperature Self Protection", Sep. 30, 2016 (Sep. 30, 2016), XP0555246104, Retrieved from the Internet: URL: http://www.mouser.com/ds/2/405/lm317m-440423.pdf, pp. 1-9.

(56) **References Cited**

OTHER PUBLICATIONS

Cuper et al., "The Use of Near-Infrared Light for Safe and Effective Visualization of Subsurface Blood Vessels to Facilitate Blood Withdrawal in Children," Medical Engineering & Physics, vol. 35, No. 4, pp. 433-440 (2013).

Yan et al, Comparison of the effects of Mg—6Zn and Ti—3Al—2.5V alloys on TGF-β/TNF-α/VEGF/b-FGF in the healing of the intestinal track in vivo, Biomed. Mater. 9 (2014), 11 pages.

Pellicer et al. "On the biodegradability, mechanical behavior, and cytocompatibility of amorphous Mg72Zn23Ca5 and crystalline Mg70Zn23Ca5Pd2 alloys as temporary implant materials," J Biomed Mater Res Part A ,2013:101A:502-517.

Anonymous, Analog Devices Wiki, Chapter 11: The Current Mirror, Aug. 20, 2017, 22 pages. https://wiki.analog.com/university/courses/electronics text/chapter-11?rev=1503222341.

Yan et al., "Comparison of the effects of Mg—6Zn and titanium on intestinal tract in vivo," J Mater Sci: Mater Med (2013), 11 pages.

Brar et al., "Investigation of the mechanical and degradation properties of Mg—Sr and Mg—Zn-Sr alloys for use as potential biodegradable implant materials," J. Mech. Behavior of Biomed. Mater. 7 (2012) pp. 87-95.

Texas Instruments: "Current Recirculation and Decay Modes," Application Report SLVA321—Mar. 2009; Retrieved from the Internet: URL:http://www.ti.com/lit/an/slva321/slva321 [retrieved on Apr. 25, 2017], 7 pages.

Qiu Li Loh et al.: "Three-Dimensional Scaffolds for Tissue Engineering Applications: Role of Porosity and Pore Size", Tissue Engineering Part B—Reviews, vol. 19, No. 6, Dec. 1, 2013, pp. 485-502.

Gao et al., "Mechanical Signature Enhancement of Response Vibrations in the Time Lag Domain," Fifth International Congress on Sound and Vibration, Dec. 15-18, 1997, pp. 1-8.

Trendafilova et al., "Vibration-based Methods for Structural and Machinery Fault Diagnosis Based on Nonlinear Dynamics Tools," In: Fault Diagnosis in Robotic and Industrial Systems, IConcept Press LTD, 2012, pp. 1-29.

Youtube.com; video by Fibran (retrieved from URL https://www.youtube.com/watch?v=vN2Qjt51gFQ); (Year: 2018).

Foot and Ankle: Core Knowledge in Orthopaedics; by DiGiovanni MD, Elsevier; (p. 27, left column, heading "Materials for Soft Orthoses", 7th bullet point); (Year: 2007).

Lee, Youbok, "Antenna Circuit Design for RFID Applications," 2003, pp. 1-50, DS00710C, Microchip Technology Inc., Available: http: /ww1.microchip.com/downloads/en/AppNotes/00710c.pdf.

Kawamura, Atsuo, et al. "Wireless Transmission of Power and Information Through One High-Frequency Resonant AC Link Inverter for Robot Manipulator Applications," Journal, May/Jun. 1996, pp. 503-508, vol. 32, No. 3, IEEE Transactions on Industry Applications.

Honda HS1332AT and ATD Model Info, powerequipment.honda.com [online], published on or before Mar. 22, 2016, [retrieved on May 31, 2019], retrieved from the Internet [URL: https://powerequipment.honda.com/snowblowers/models/hss1332at-hss1332atd] {Year: 2016).

Slow Safety Sign, shutterstock.com [online], published on or before May 9, 2017, [retrieved on May 31, 2019], retrieved from the https://www.shutterstock.com/image-victor/slow-safety-sign-twodimensional-turtle-symbolizing- . . . see PDF in file for full URL] (Year: 2017).

Warning Sign Beveled Buttons, by Peter, flarestock.com [online], published on or before Jan. 1, 2017, [retrieved on Jun. 4, 2019], retrieved from the Internet [URL: https://www.flarestock.com/stock-images warning-sign-beveled-buttons/70257] (Year: 2017).

Arrow Sign Icon Next Button, by Blan-k, shutterstock.com [online], published on or before Aug. 6, 2014, [retrieved on Jun. 4, 2019], retrieved from the Internet [URL:https://www.shutterstock.com/de/image-vector/arrow-sign-icon-next-button-navigation-207700303?irgwc 1&utm . . . see PDF in file for full URL] (Year: 2014).

Elite Icons, by smart/icons, iconfinder.com [online], published on Aug. 18, 2016, [retrieved on Jun. 4, 2019], retrieved from the Internet [URL: https://www.iconfinder.com/iconsets/elite] (Year: 2016).

Tutorial overview of inductively coupled RFID Systems, UPM, May 2003, pp. 1-7, UPM Rafsec <http://cdn.mobiusconsulting.com papers/rfidsystems.pdf>.

Schroeter John "Demystijying UHF Gen 2 RFID, HF RFID," Online Article, Jun. 2, 2008, pp. 1-3 <https://www.edn.com design industrial-control/4019123/Demystifying-UHF-Gen-2-RFID-HF-RFID>.

Adeeb, et al., "An Inductive Link-Based Wireless Power Transfer System for Biomedical Applications," Research Article, Nov. 14, 2011, pp. 1-12, vol. 2012, Article ID 879294, Hindawi Publishing Corporation.

Pushing Pixels (GIF), published on dribble.com, 2013.

Sodium stearate C18H35NaO2, Chemspider Search and Share Chemistry, Royal Society of Chemistry, pp. 1-3, 2015, http://www.chemspider.com/Chemical-Structure.12639.html, accessed May 23, 2016.

NF Monographs: Sodium Stearate, U.S. Pharmacopeia, http://www.pharmacopeia.cn/v29240/usp29nf24s0_m77360.html, accessed May 23, 2016.

Fischer, Martin H, "Colloid-Chemical Studies on Soaps", The Chemical Engineer, pp. 184-193, Aug. 1919.

V.K. Ahluwalia and Madhuri Goyal, A Textbook of Organic Chemistry, Section 19.11.3, p. 356, 2000.

A.V. Kasture and S.G. Wadodkar, Pharmaceutical Chemistry-II: Second Year Diploma in Pharmacy, Nirali Prakashan, p. 339, 2007.

Forum discussion regarding "Speed is Faster", published on Oct. 1, 2014 and retrieved on Nov. 8, 2019 from URL https://english.stackexchange.com/questions/199018/how-is-that-correct-speed-is-faster-or-prices-are-cheaper (Year: 2014).

"Understanding the Requirements of ISO/IEC 14443 for Type B Proximity Contactless Identification Cards," retrieved from https://www.digchip.com/application-notes/22/15746.php on Mar. 2, 2020, pp. 1-28 (Nov. 2005).

Jauchem, J.R., "Effects of low-level radio-frequency (3 kHz to 300 GHz) enery on human cardiovascular, reproductive, immune, and other systems: A review of the recent literatured," Int. J. Hyg. Environ. Health 211 (2008) 1-29.

Sandvik, "Welding Handbook," https://www.meting.rs/wp-content uploads/2018/05/welding-handbook.pdf, retrieved on Jun. 22, 2020. pp. 5-6.

Ludois, Daniel C., "Capacitive Power Transfer for Rotor Field Current in Synchronous Machines," IEEE Transactions on Power Electronics, Institute of Electrical and Electronics Engineers, USA, vol. 27, No. 11, Nov. 1, 2012, pp. 4638-4645.

Rotary Systems: Sealed Slip Ring Categories, Rotary Systems, May 22, 2017, retrieved from the internet: http://web.archive.org we 20170522174710/http:/rotarysystems.com: 80/slip-rings sealed., retrieved on Aug. 12, 2020, pp. 1-2.

IEEE Std 802.3-2012 (Revision of IEEE Std 802.3-2008, published Dec. 28, 2012.

"ATM-MPLS Network Interworking Version 2.0, af-aic-0178.001" ATM Standard, The ATM Forum Technical Committee, published Aug. 2003.

Yang et al.; "4D printing reconfigurable, deployable and mechanically tunable metamaterials," Material Horizions, vol. 6, pp. 1244-1250 (2019).

"Council Directive 93/42/EEC of Jun. 14, 1993 Concerning Medical Devices," Official Journal of the European Communities, L&C. Ligislation and Competition, S, No. L 169, Jun. 14, 1993, pp. 1-43.

Arjo Loeve et al., Scopes Too Flexible . . . and Too Stiff, 2010, IEEE Pulse, Nov./Dec. 2010 (Year: 2010), 16 pages.

Molina, "Low Level Reader Protocol (LLRP)," Oct. 13, 2010, pp. 1-198.

Makerbot, 10 Advantages of 3D Printing, 2020 (retrieved via the wayback machine), Makerbot.com (Year: 2020).

U.S. Appl. No. 62/798,651, filed Jan. 30, 2019.

U.S. Appl. No. 62/840,602, filed Apr. 30, 2019.

* cited by examiner

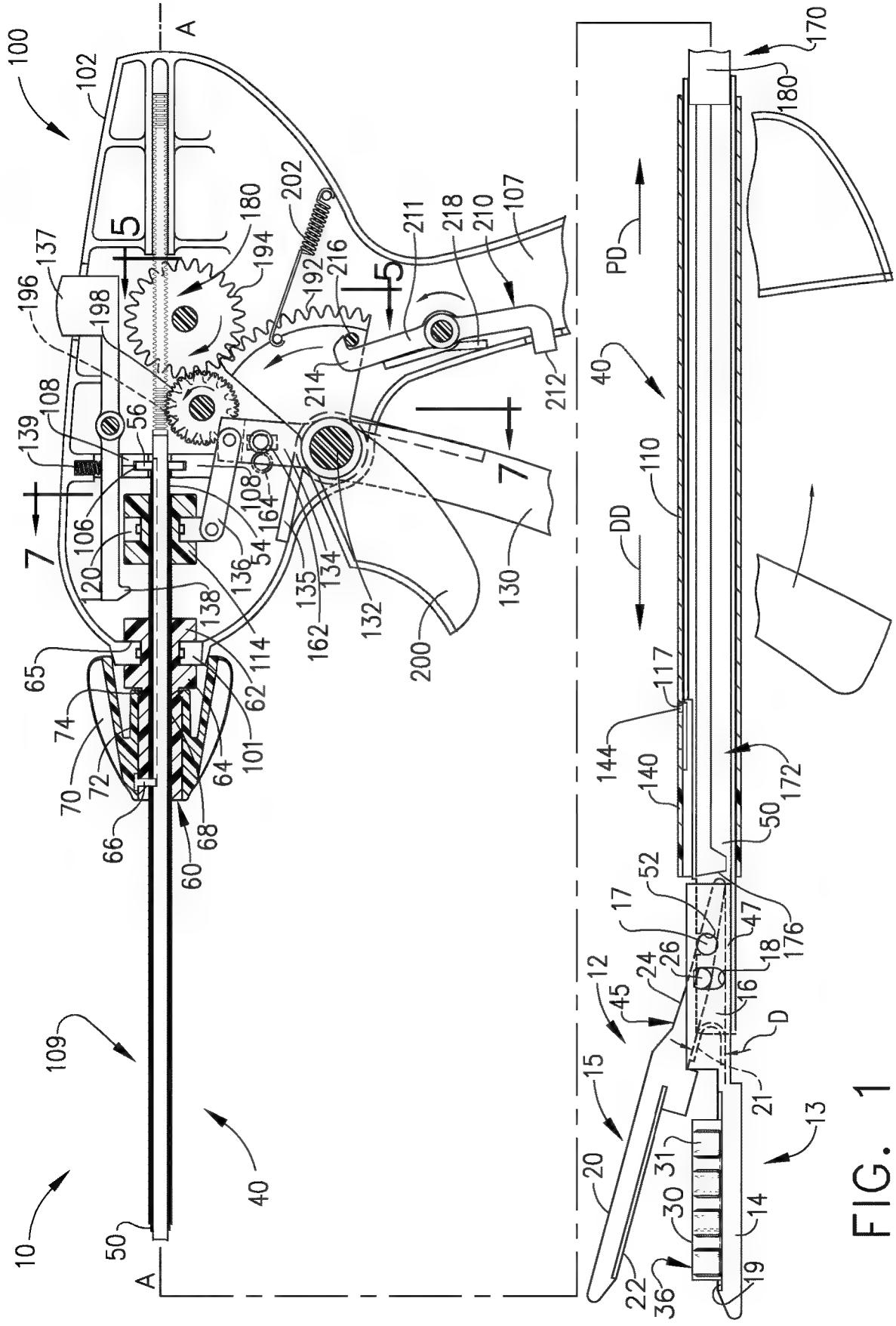
100
102
A
5
180
194
202
192
216
211
218
210
107
137
196
198
108
139
56
106
120
136
54
164
108
135
134
162
132
200
130
214
212
7
138
114
65
74
70
72
66
60
68
64
101
62
109
40
10
50
A
170
180
PD
40
110
DD
117
144
140
172
50
52
17
47
176
18
26
24
12
45
16
D
15
21
13
20
31
30
14
22
36
19

FIG. 1

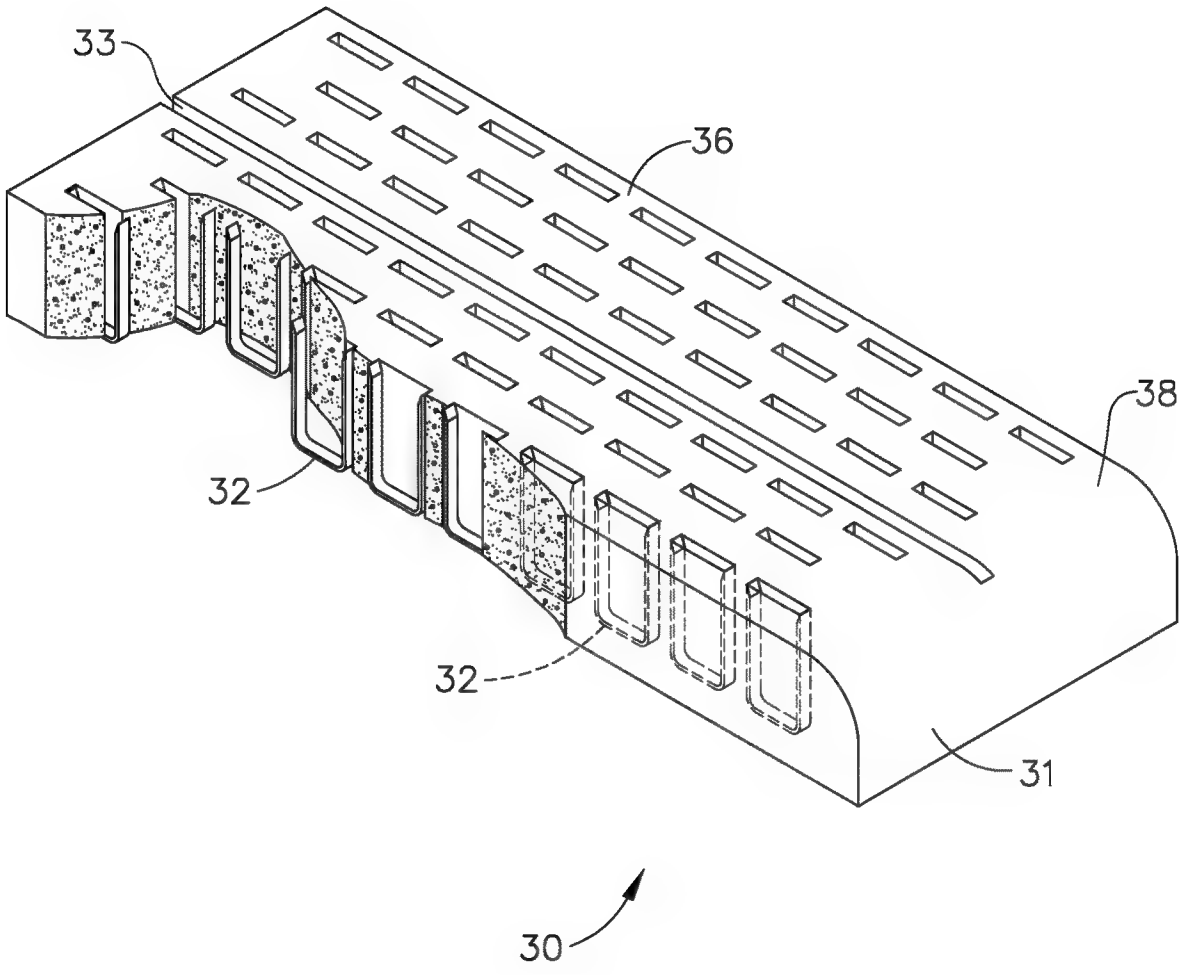

FIG. 1A

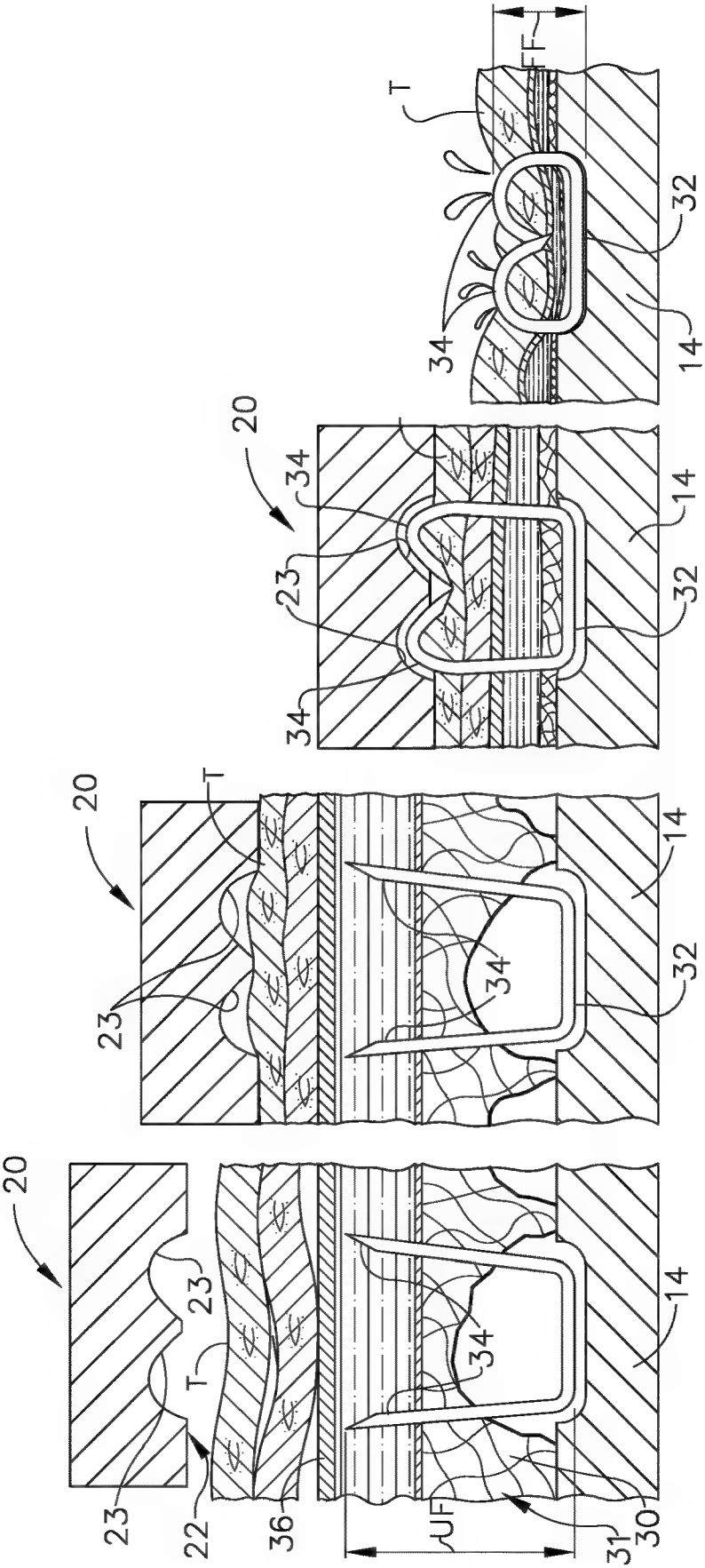

FIG. 1B FIG. 1C FIG. 1D FIG. 1E

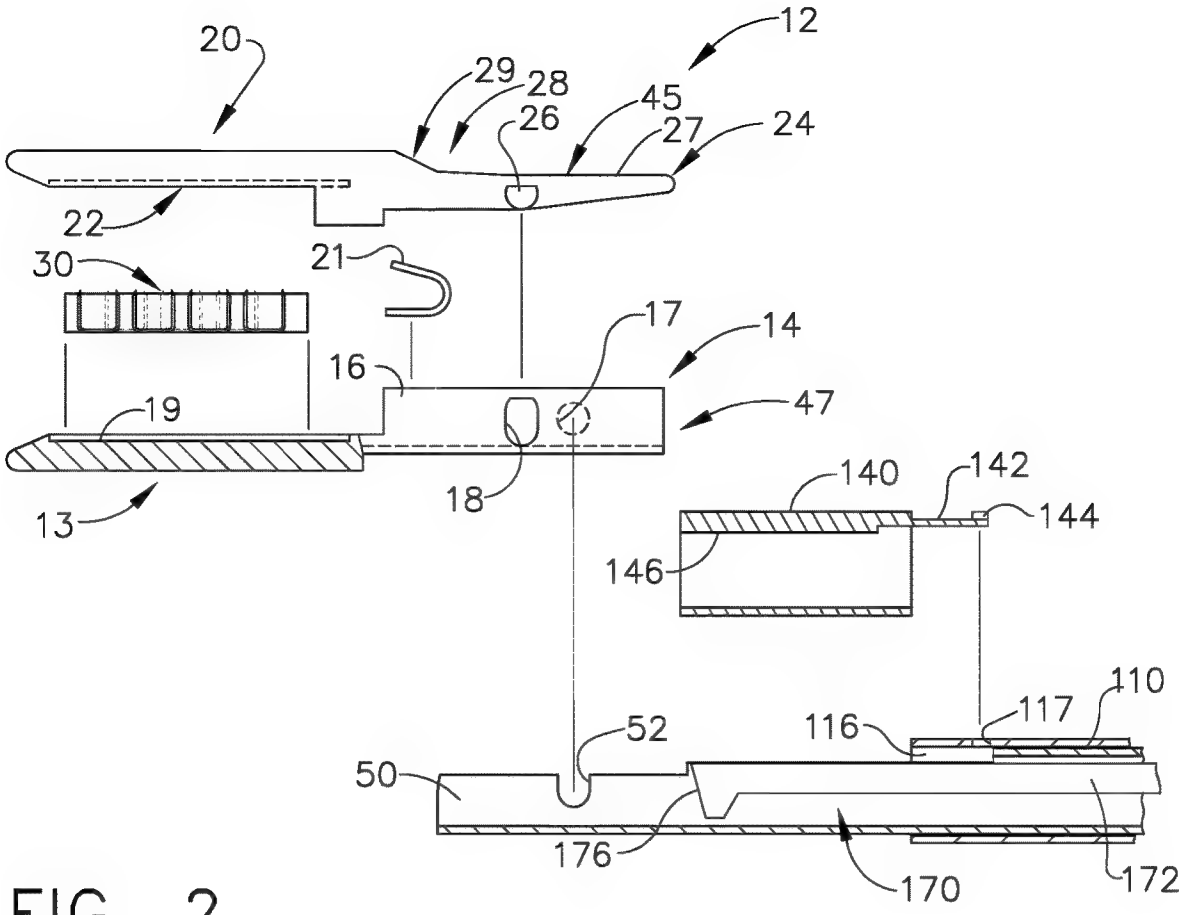
20
12
29
28
45
26
27
24
22
30
21
17
14
16
47
19
18
13
140
142
144
146
110
117
116
52
50
176
170
172

FIG. 2

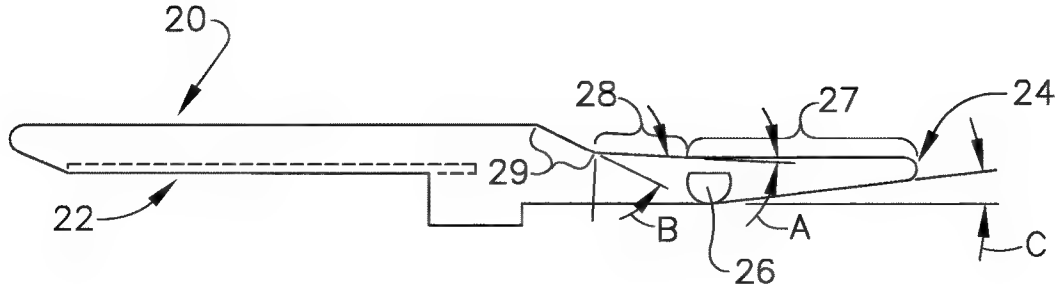
20
28
27
24
29
22
B
A
C
26

FIG. 3

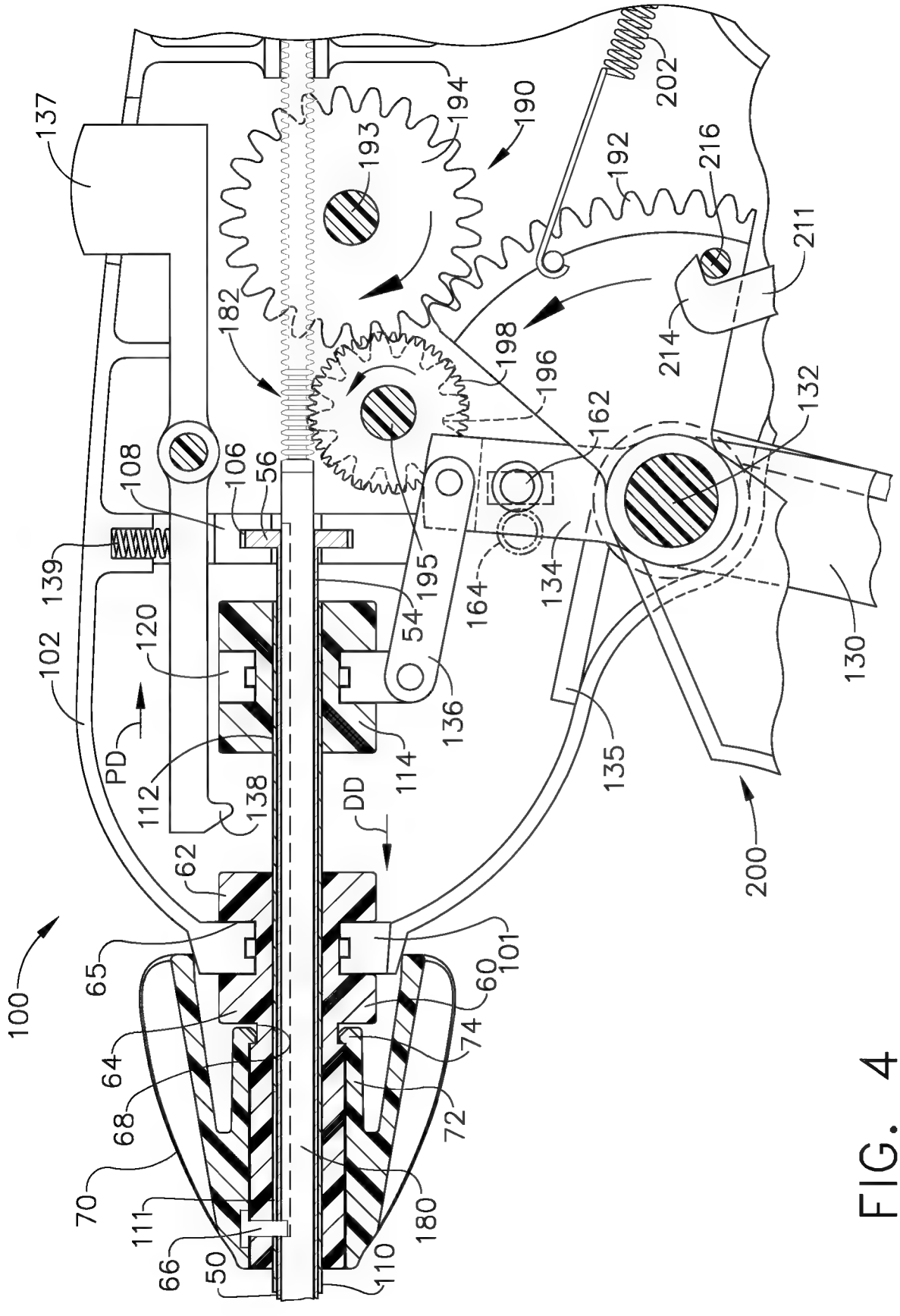
100
101
102
106
108
110
111
112
114
120
130
132
134
135
136
137
138
139
50
54
56
60
62
64
65
66
68
70
72
74
180
182
190
192
193
194
195
196
198
200
202
211
214
216
162
164
PD
DD

FIG. 4

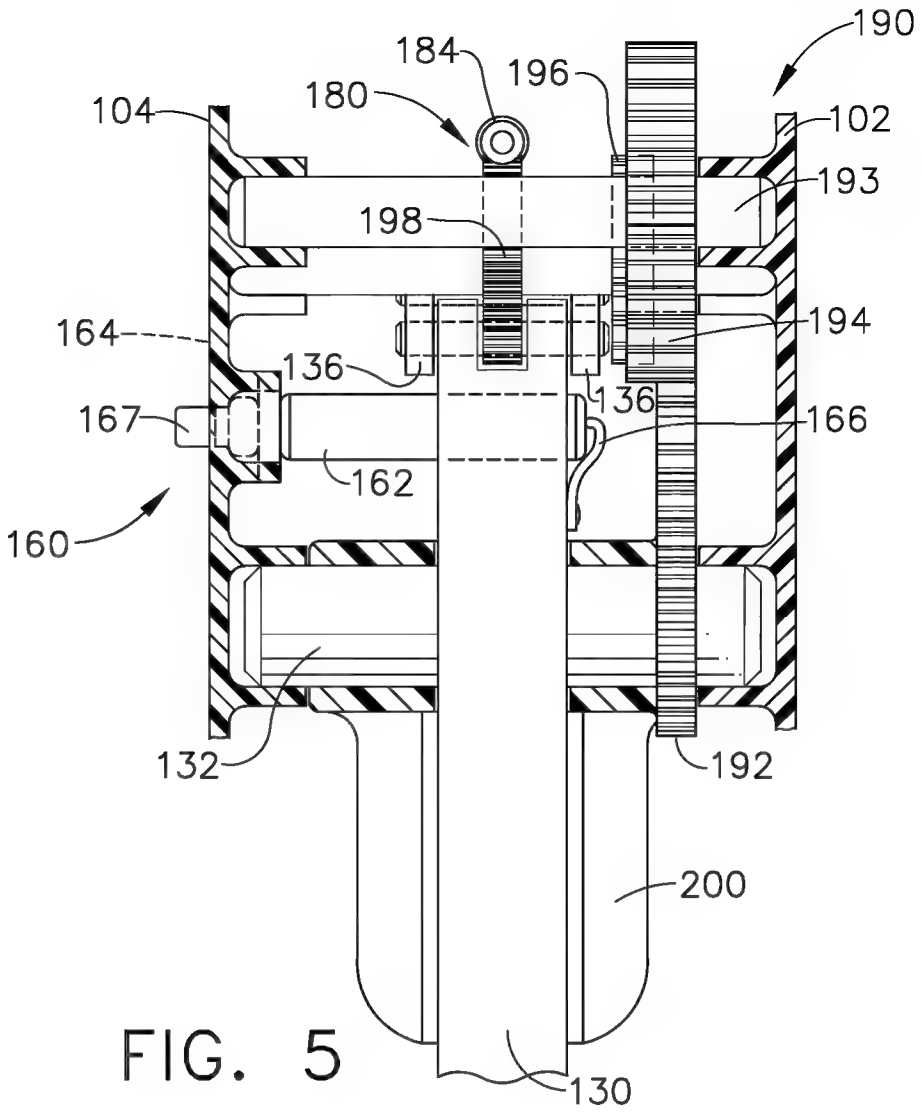
190
184
196
180
104
102
193
198
194
164
136
136
167
166
162
160
132
192
200
130

FIG. 5

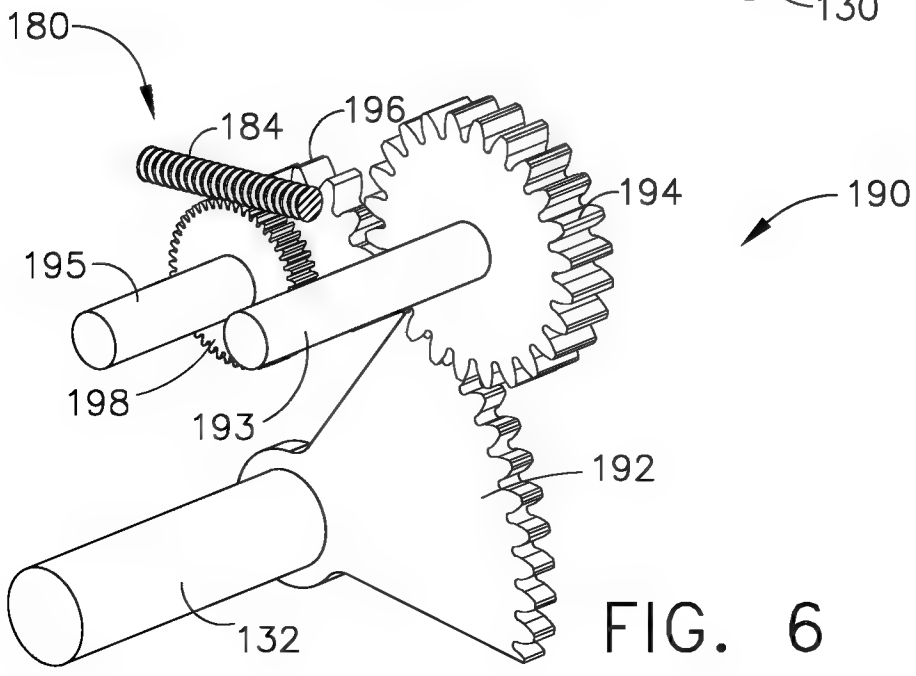
180
184
196
194
190
195
198
193
192
132

FIG. 6

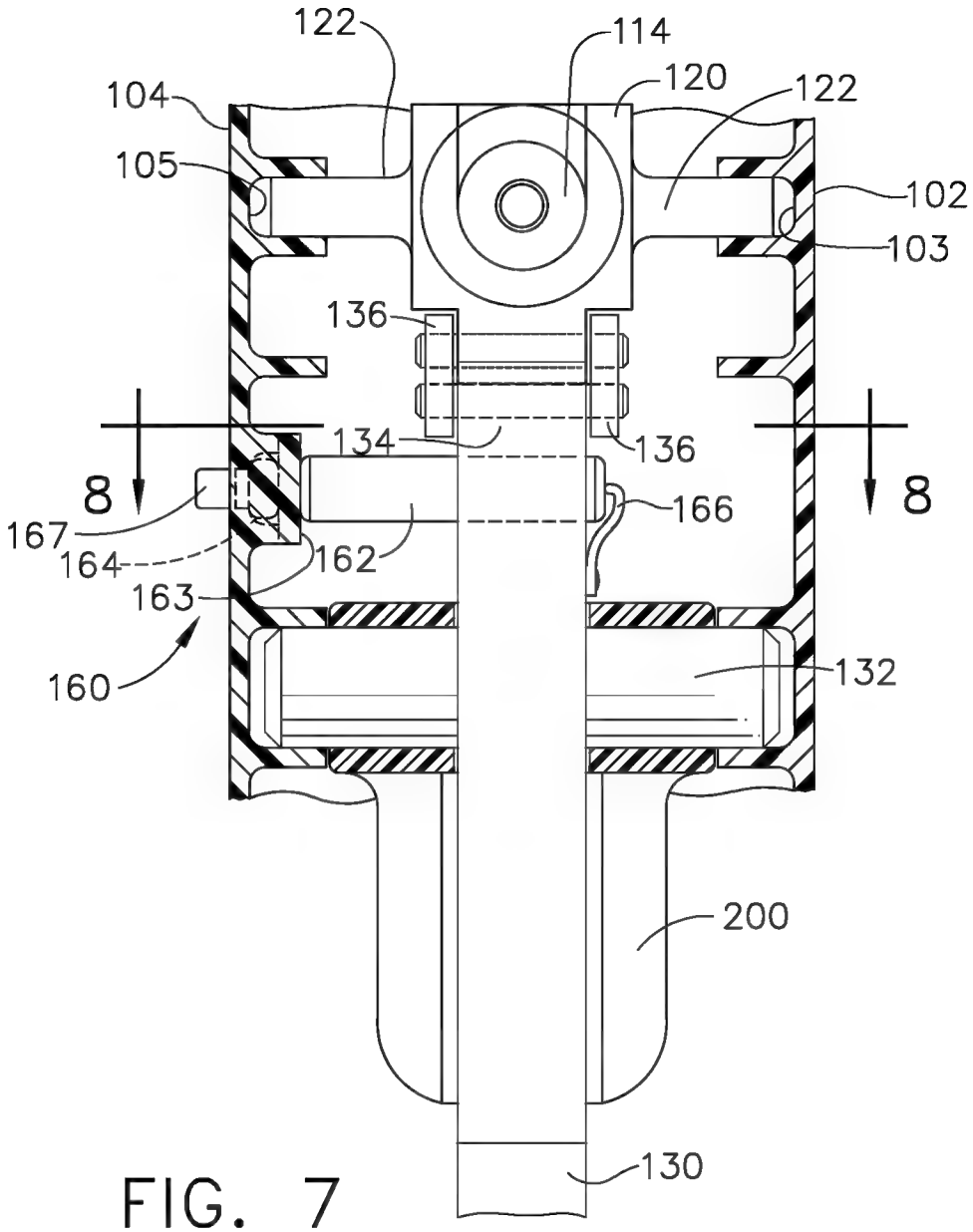
122
114
120
122
104
105
102
103
136
134
136
8
8
166
167
164
162
163
160
132
200
130

FIG. 7

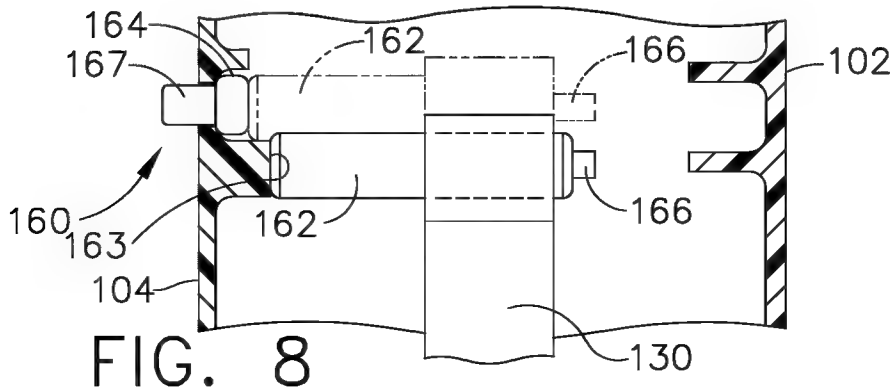
164
162
166
102
167
160
163
162
166
104
130

FIG. 8

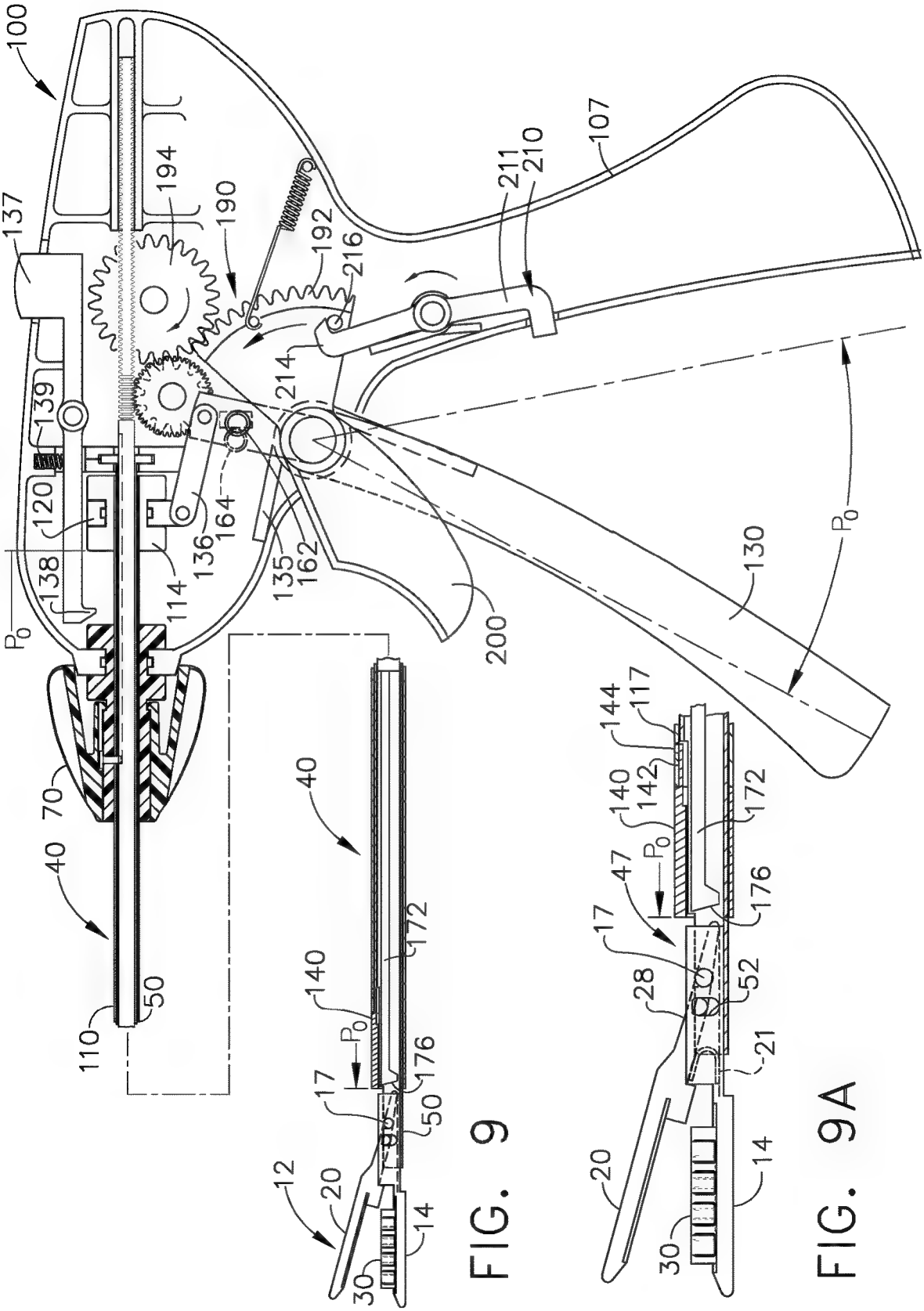
100
137
194
190
192
216
211
210
107
214
139
120
138
114
136
164
135
162
200
130
P_0
70
40
110
50
40
172
140
P_0
176
17
50
12
20
14
30
144
117
140
142
172
P_0
47
176
17
28
52
21
20
14
30

FIG. 9

FIG. 9A

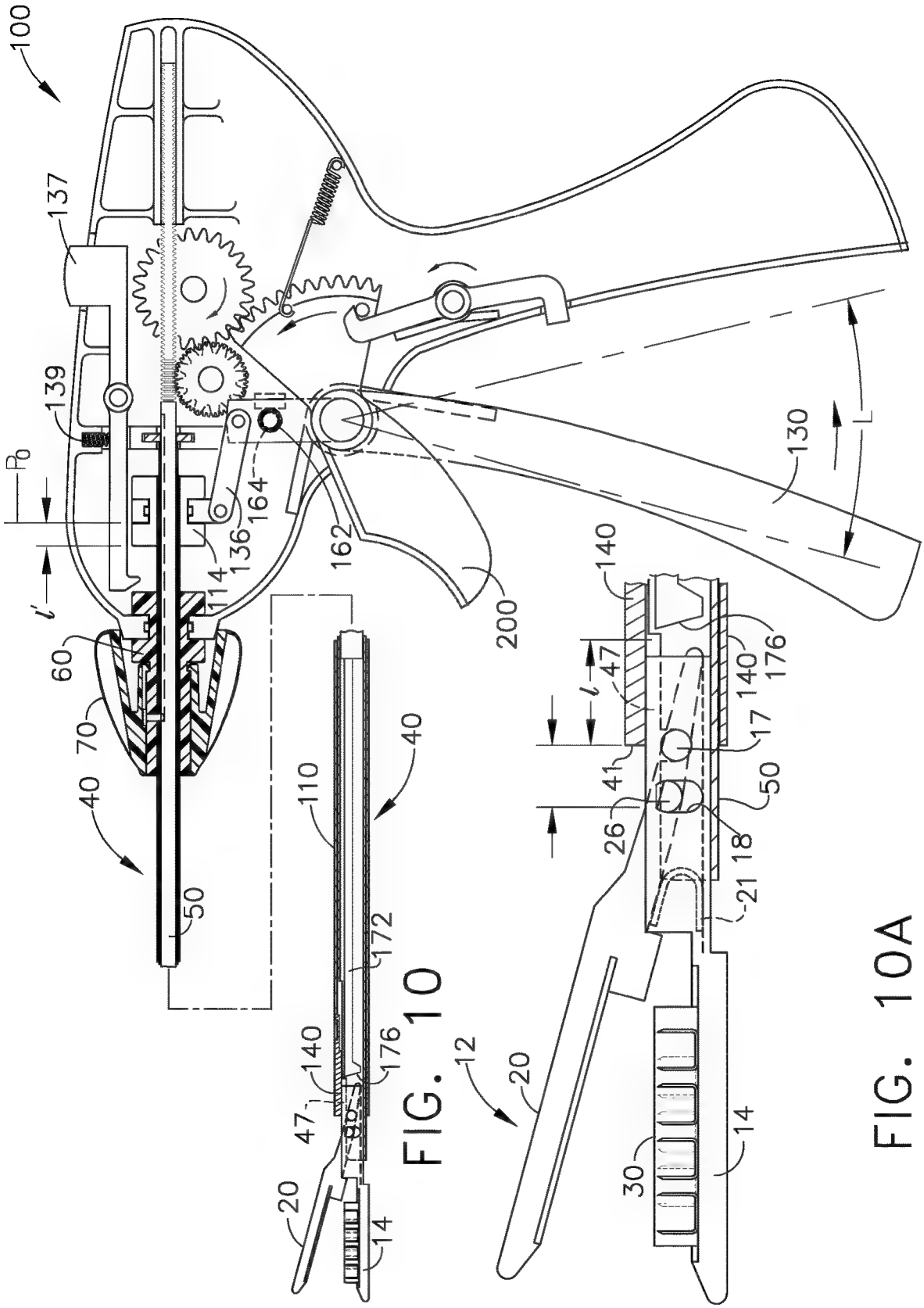

FIG. 10

FIG. 10A

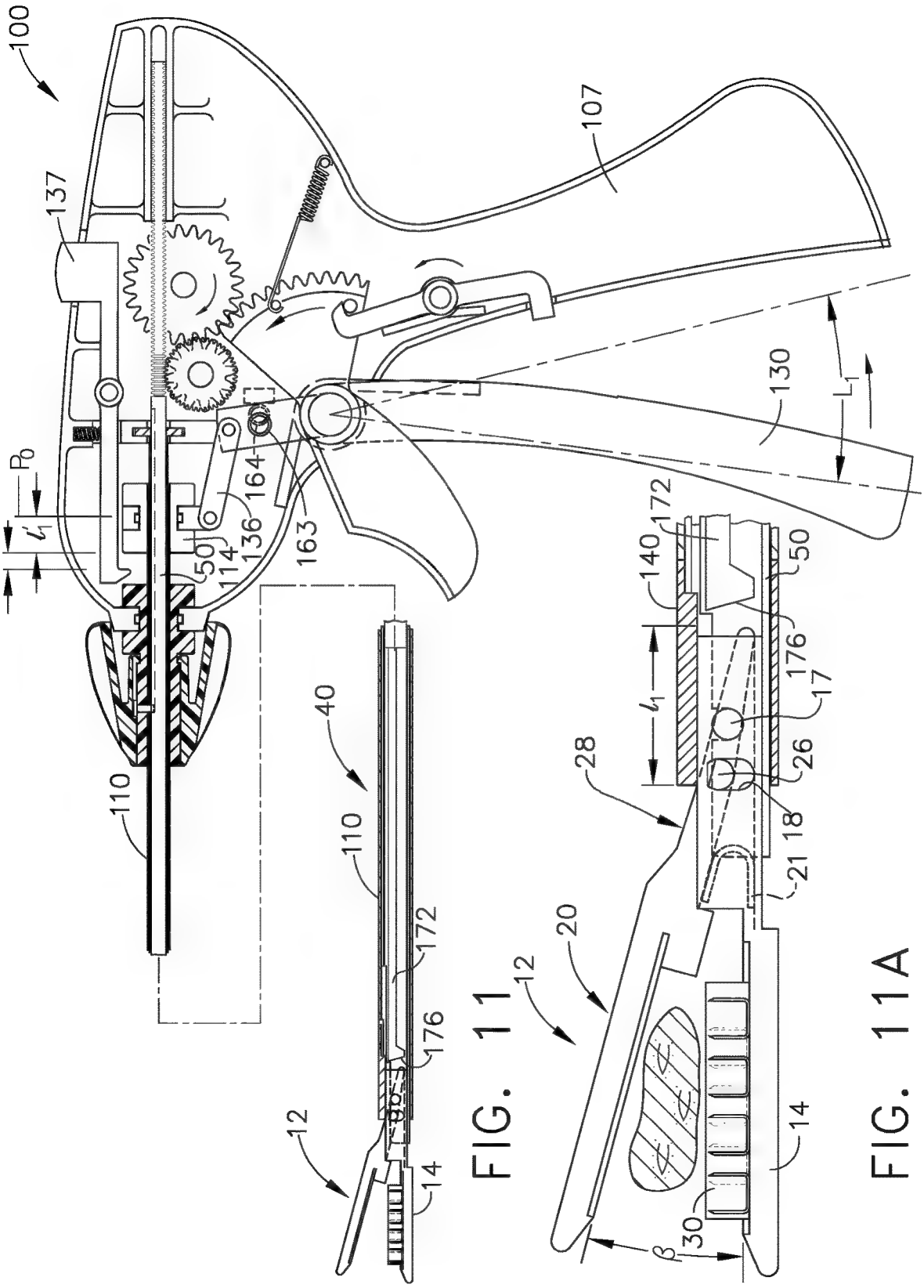

FIG. 11

FIG. 11A

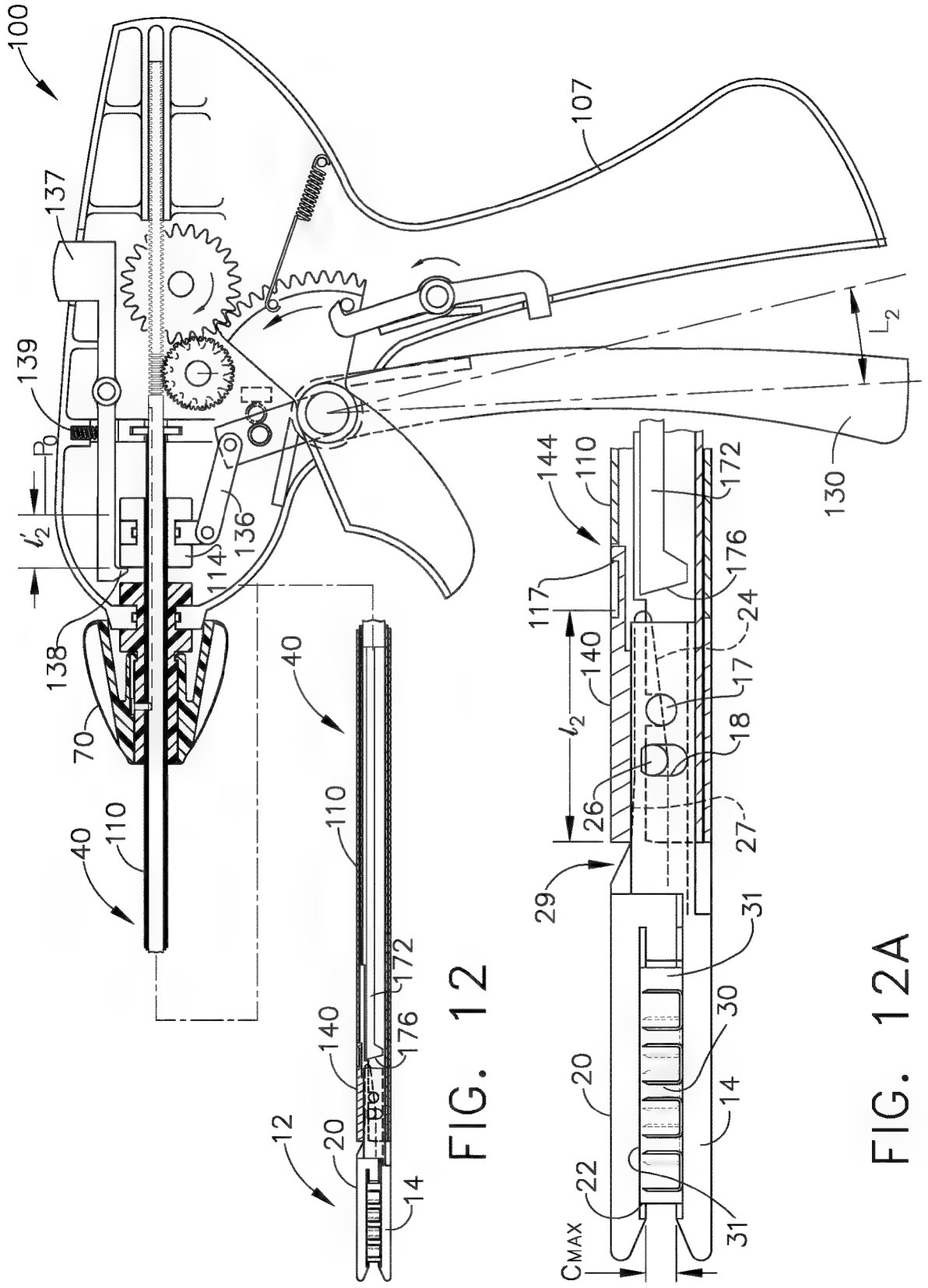

FIG. 12

FIG. 12A

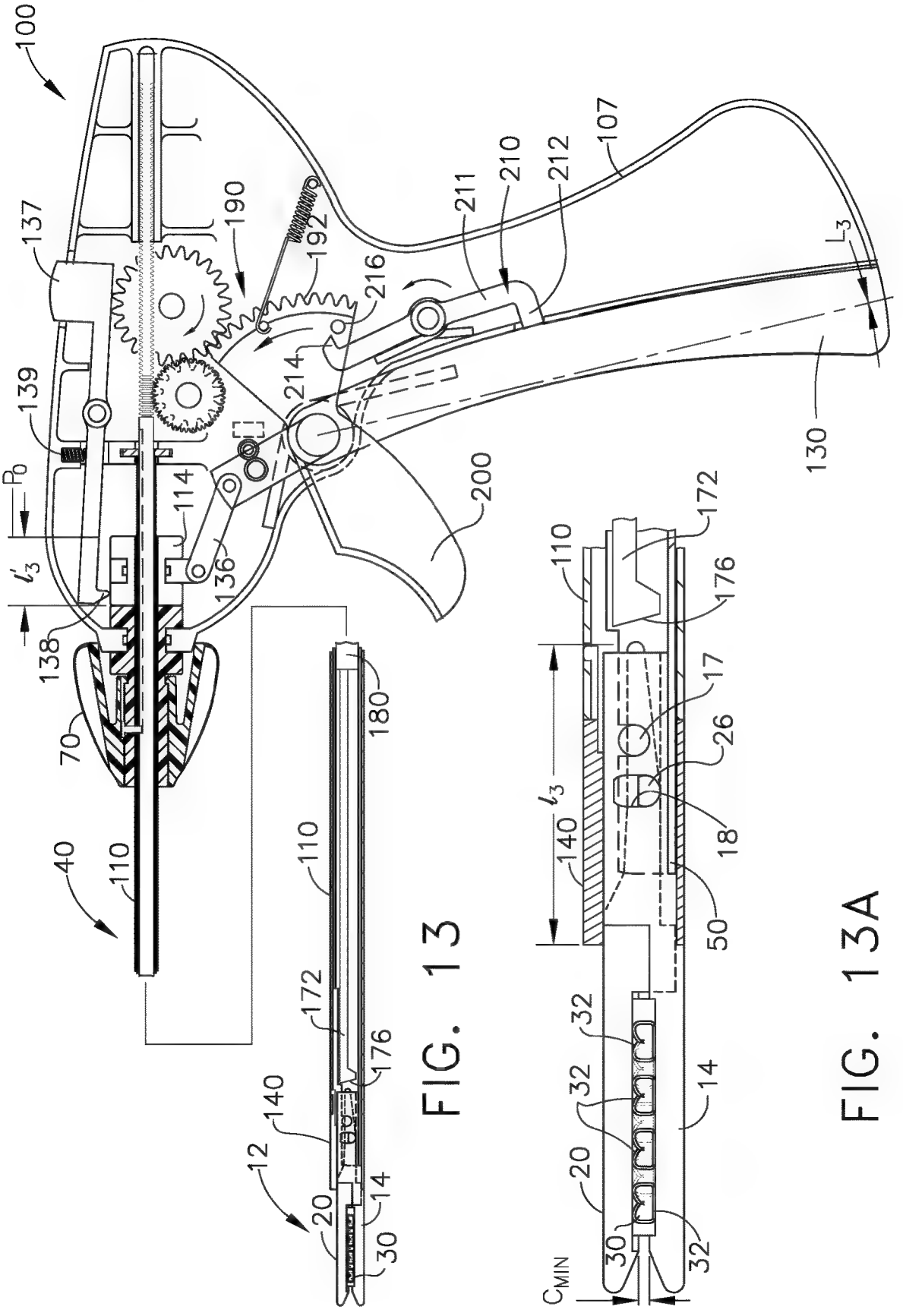

FIG. 13

FIG. 13A

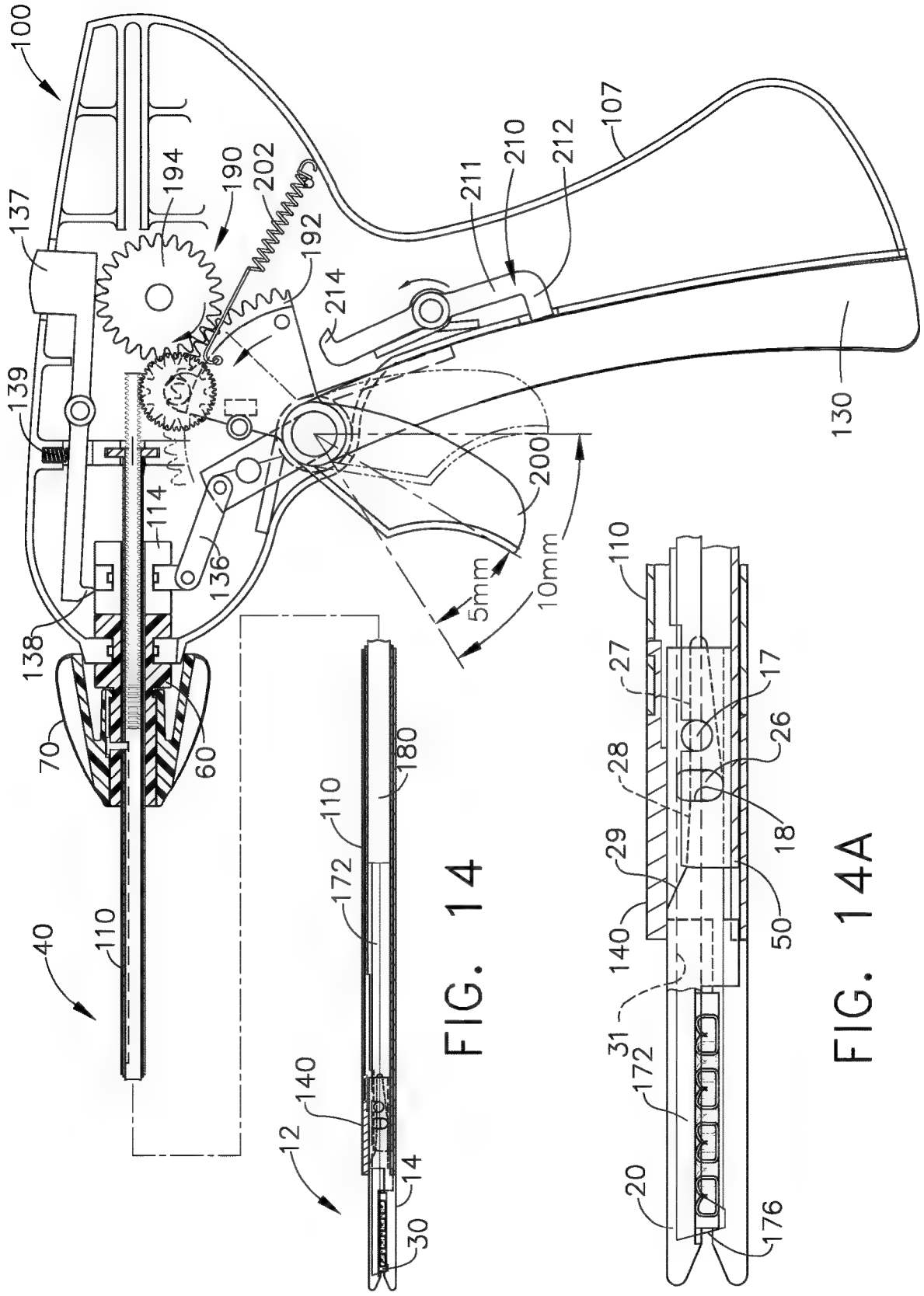

FIG. 14

FIG. 14A

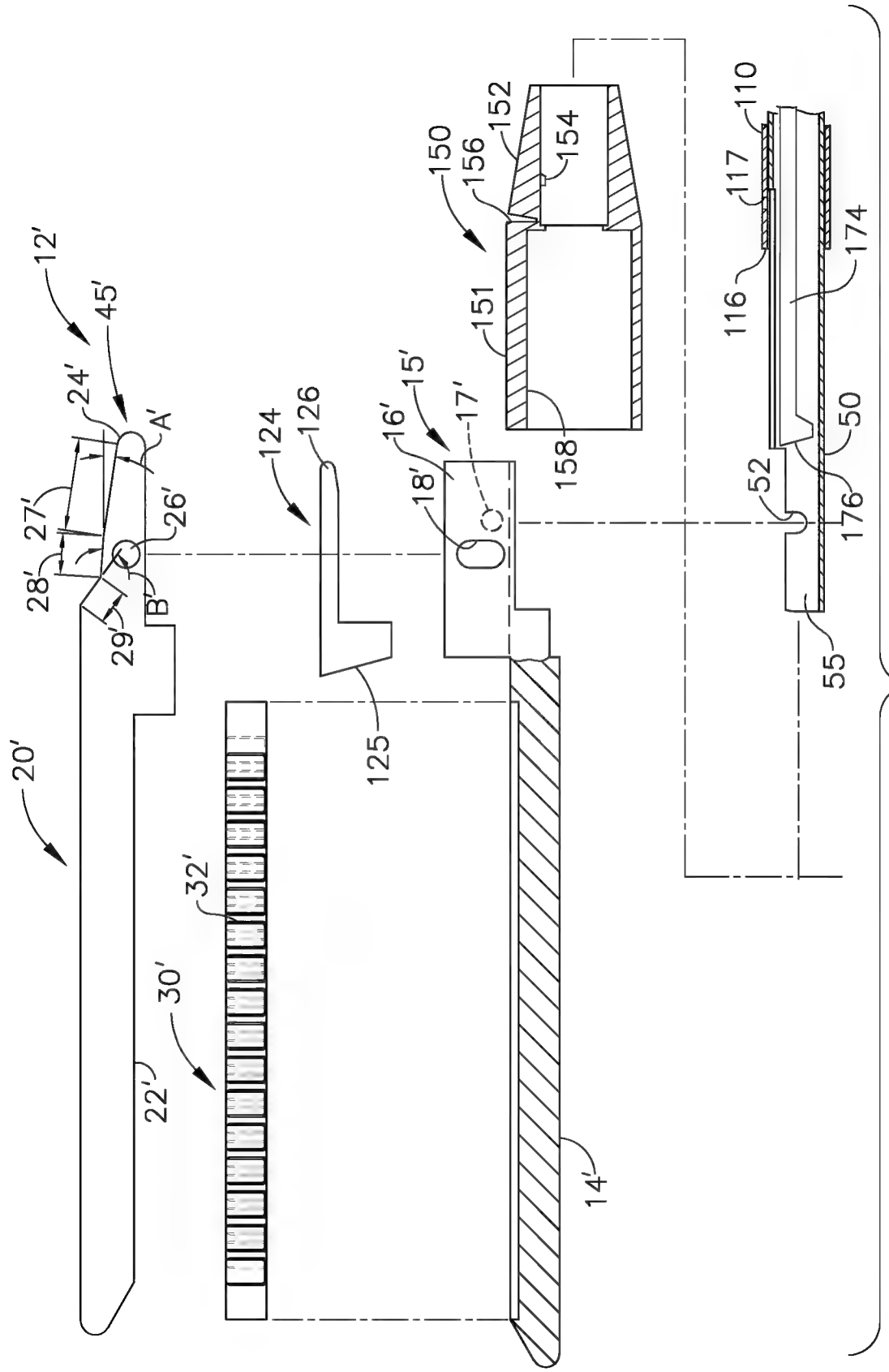
12'
45'
24'
A'
27'
26'
28'
B'
29'
20'
32'
30'
22'
124
126
125
16'
15'
17'
18'
150
156
152
154
151
158
110
117
174
116
50
52
176
55
14'

FIG. 15

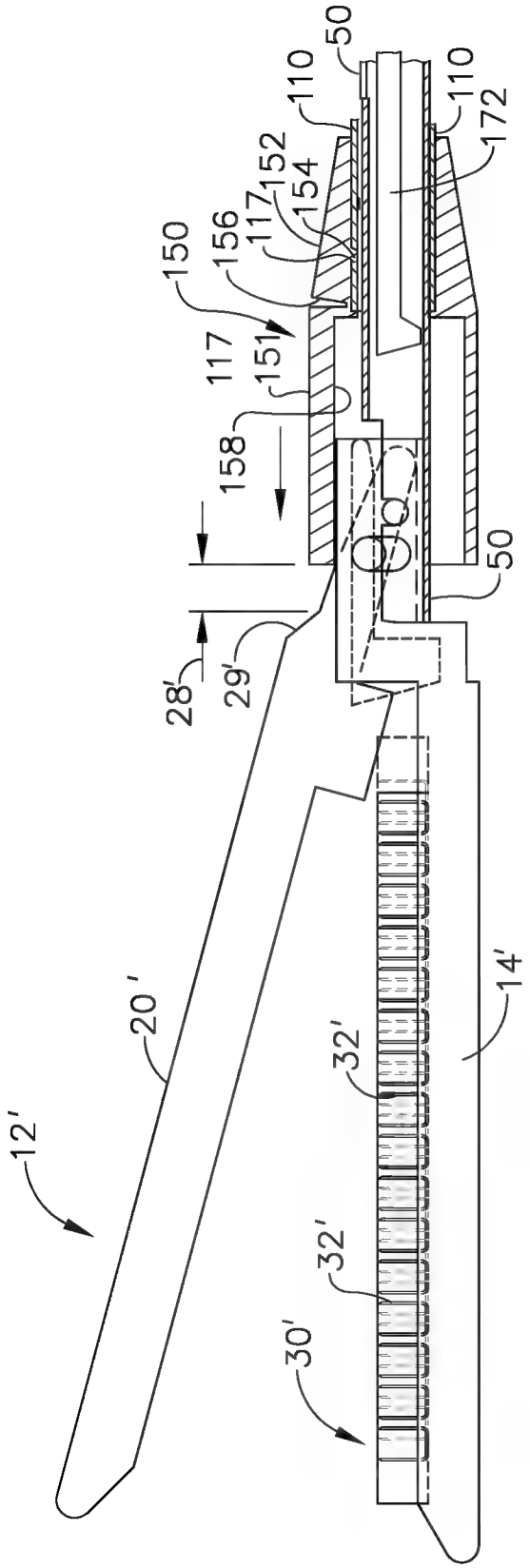
12'
20'
14'
32'
32'
30'
28'
29'
158
150
156
117
151
154
152
110
50
172

FIG. 16

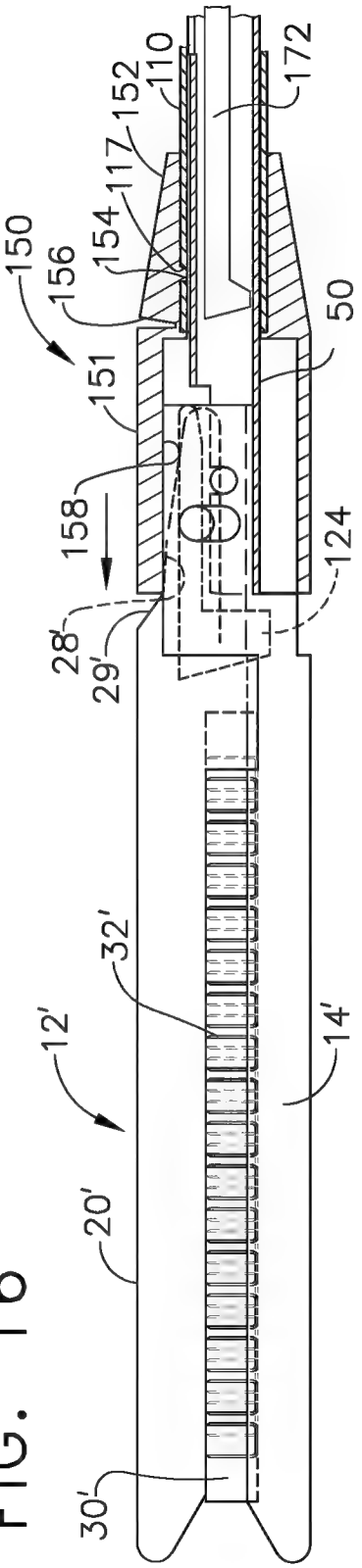
12'
20'
14'
32'
30'
28'
29'
158
150
156
154
117
152
110
172
50
124

FIG. 17

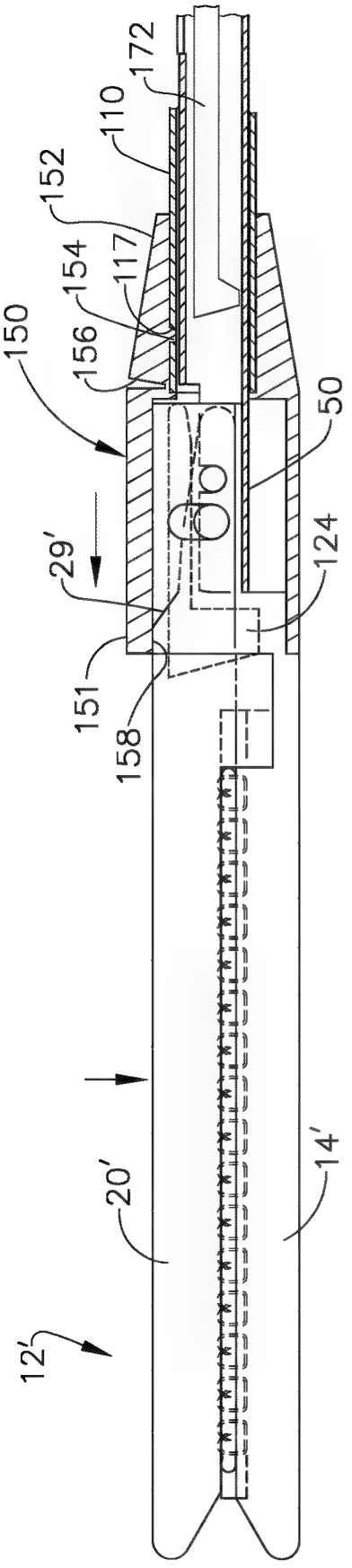
172
110
152
154
117
156
150
50
29'
124
151
158
20'
14'
12'

FIG. 18

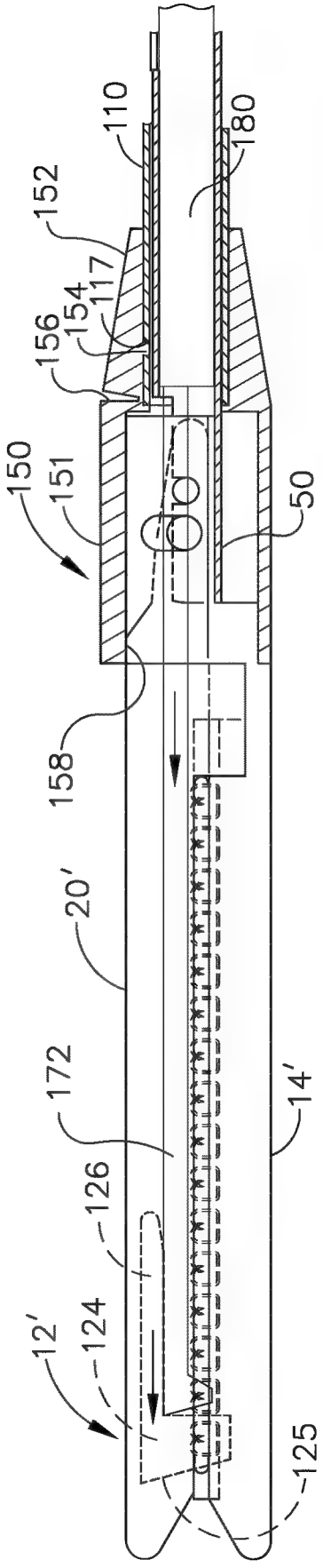
110
180
152
156
154
117
150
151
50
158
20'
172
14'
126
12'
124
125

FIG. 19

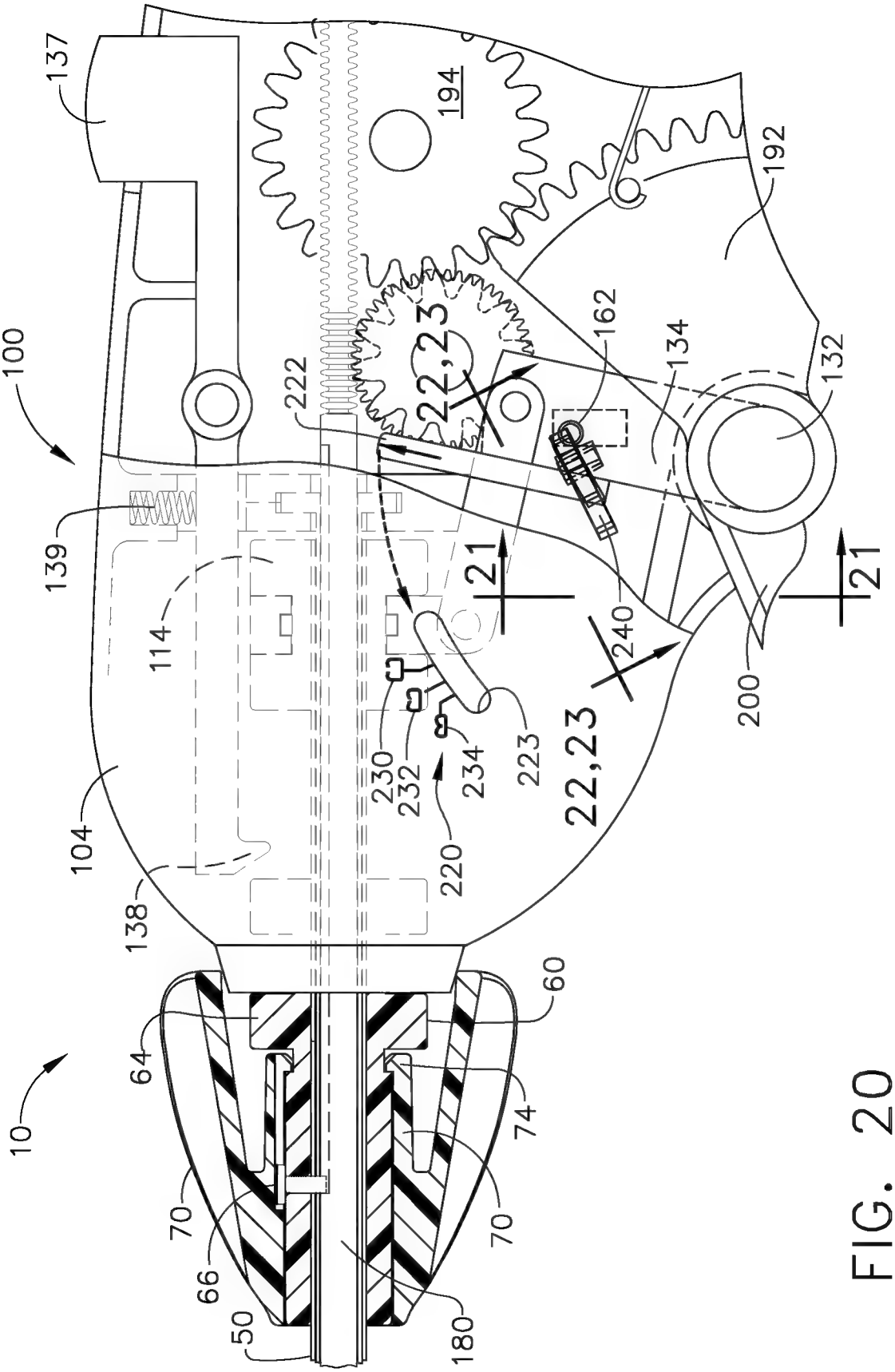
137
194
192
100
222
22,23
162
134
132
139
21
21
114
240
200
230
232
234
223
22,23
104
220
138
60
64
74
70
70
66
50
180
10

FIG. 20

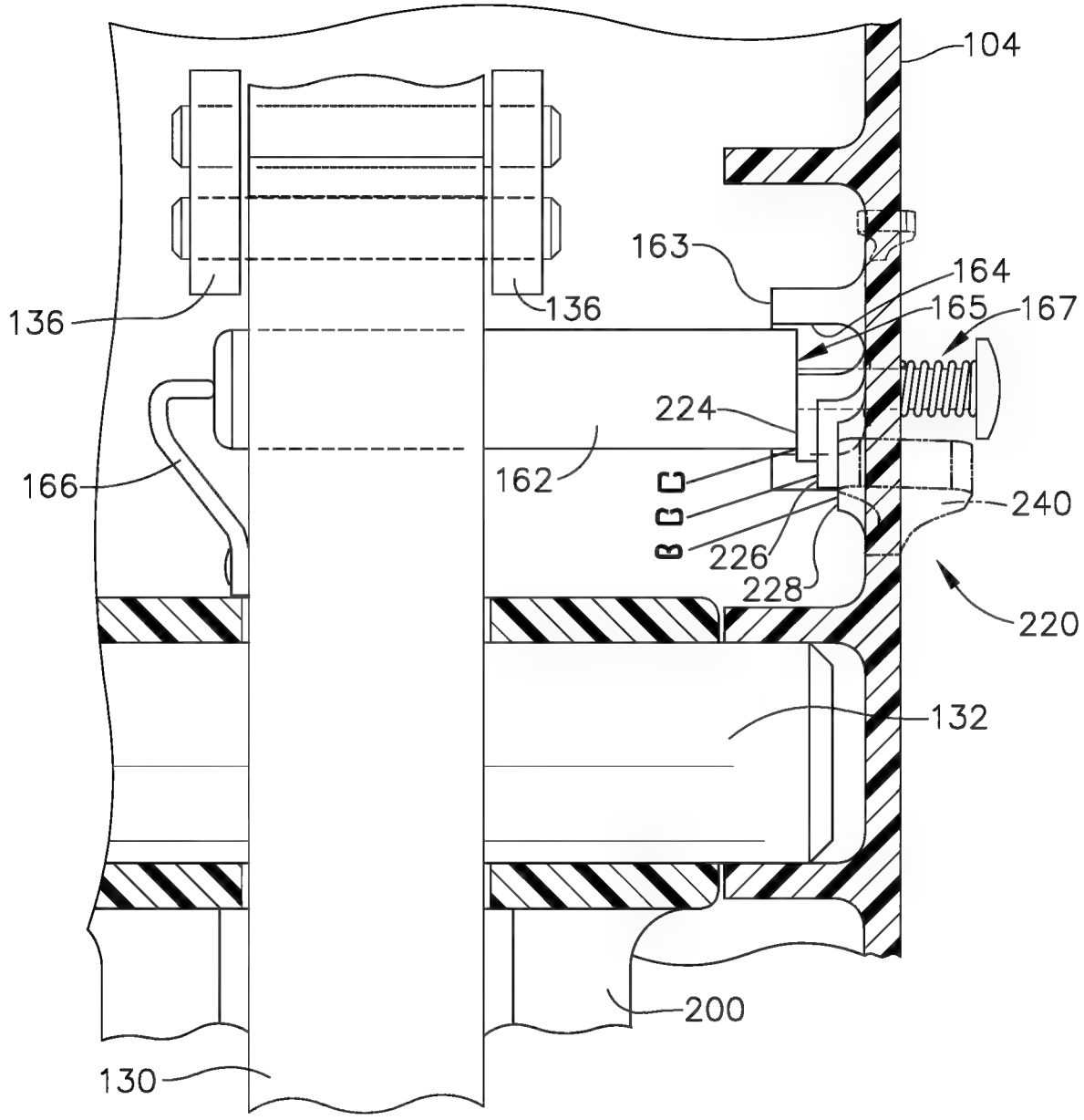
104
163
164
165
167
136
136
224
166
162
B
B
C
240
226
228
220
132
200
130

FIG. 21

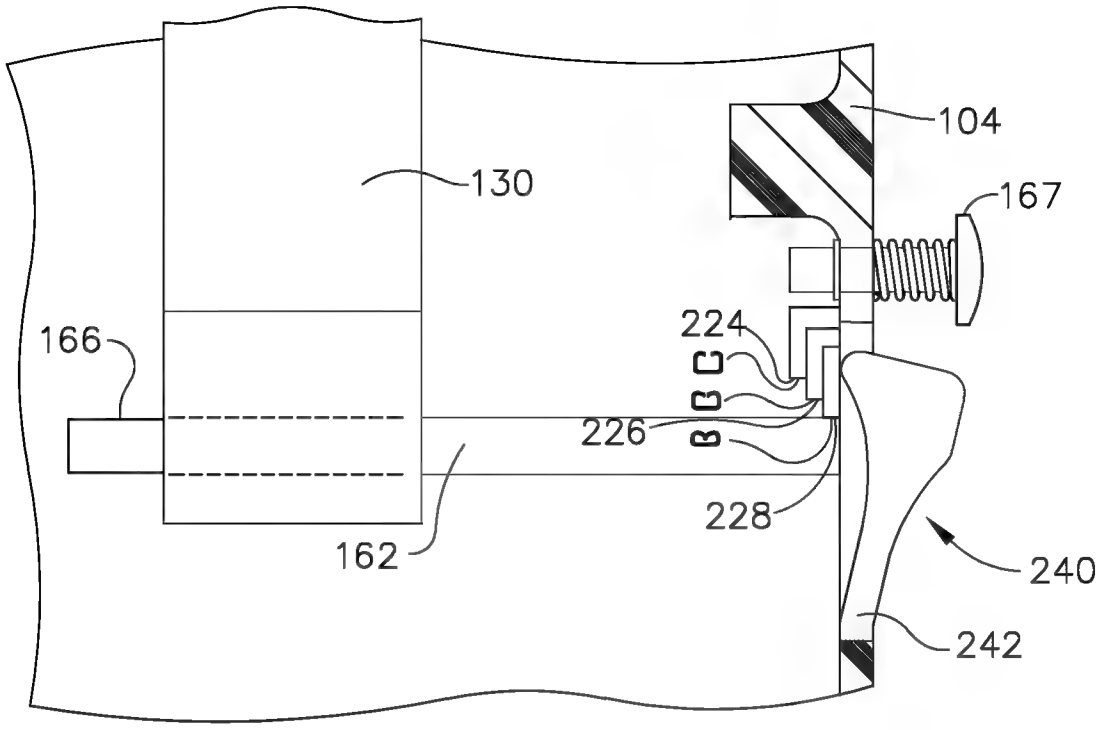
104
130
167
166
224
BCC
226
228
162
240
242

FIG. 22

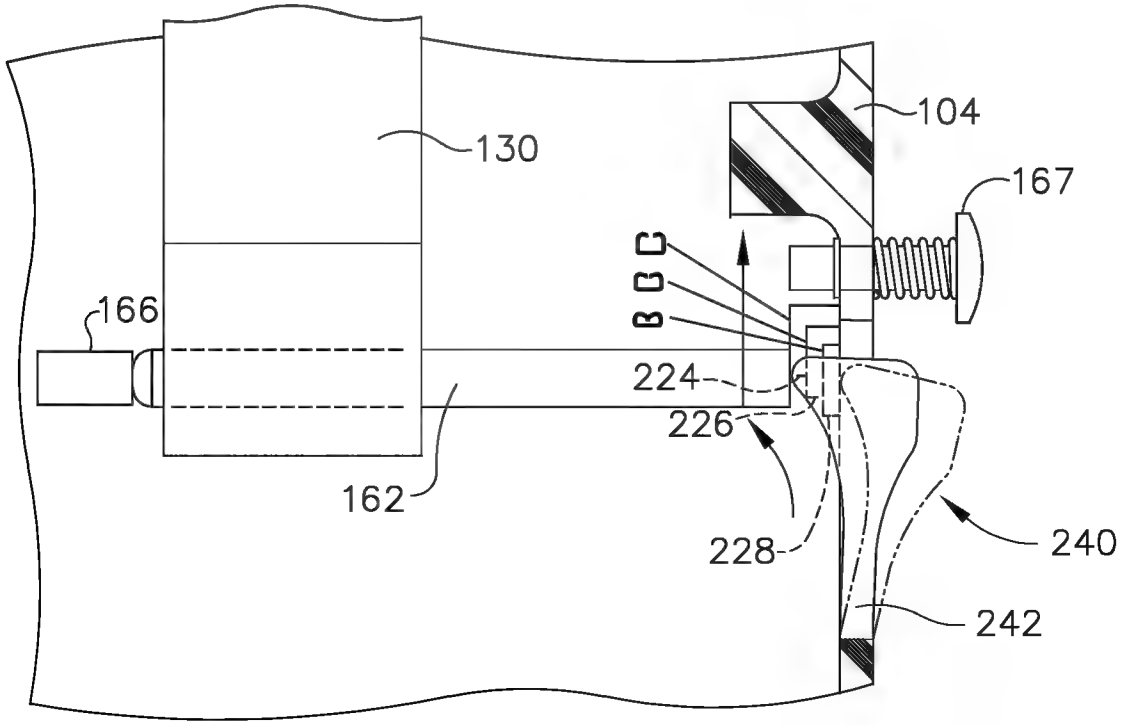
104
130
167
BCC
166
224
226
162
228
240
242

FIG. 23

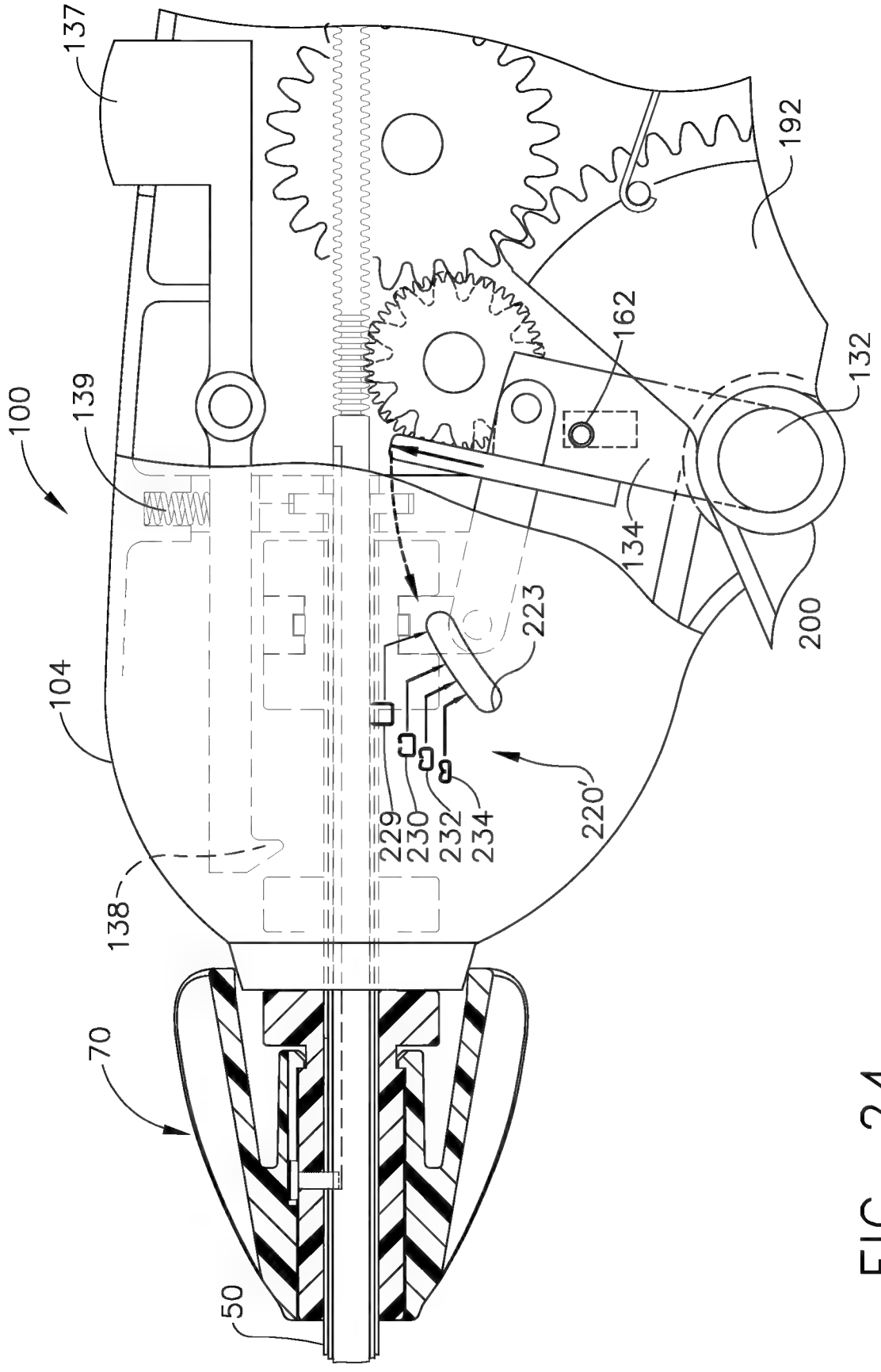
137
192
162
132
100
139
134
223
200
104
220
229
230
232
234
138
70
50

FIG. 24

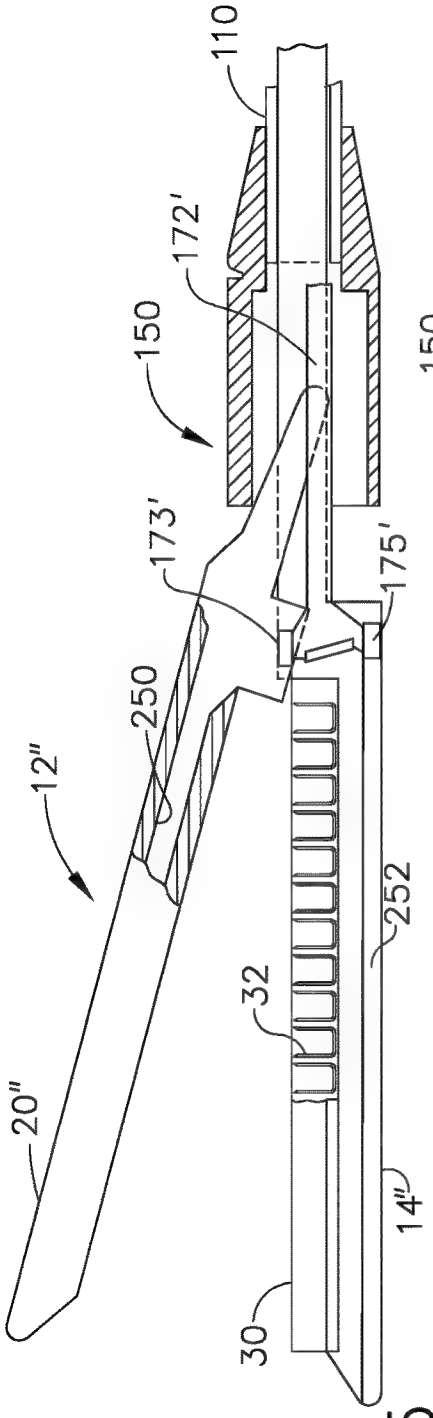

FIG. 25

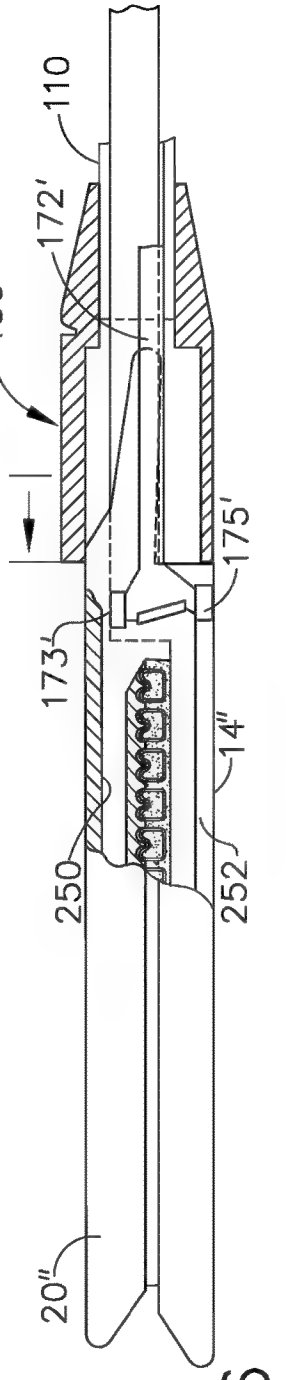

FIG. 26

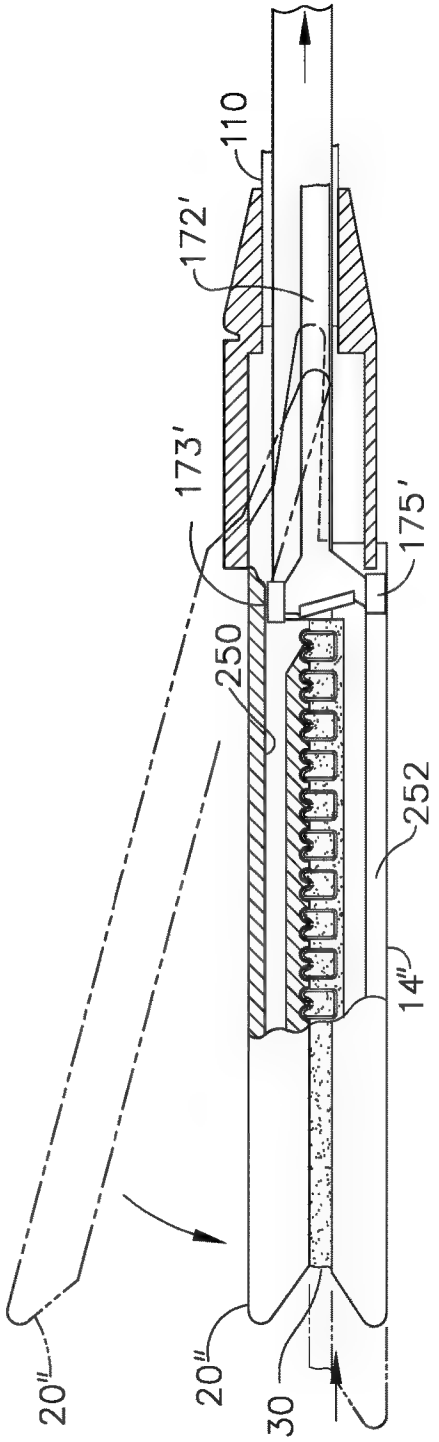

FIG. 27

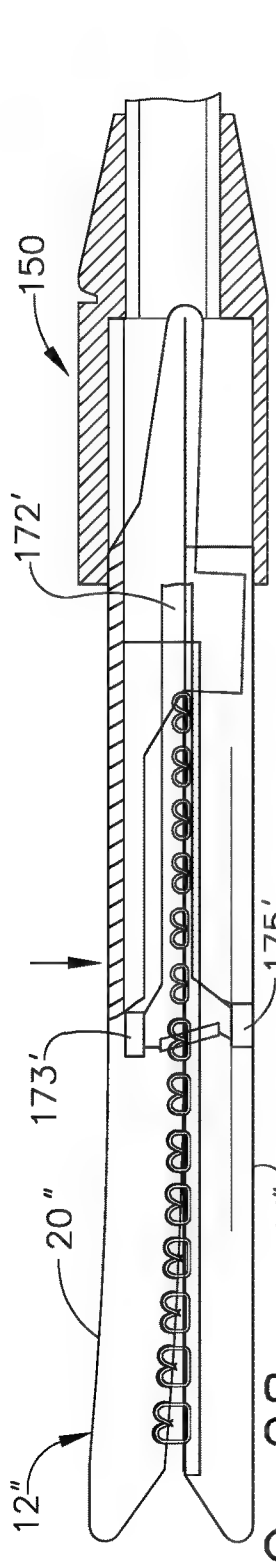

FIG. 28

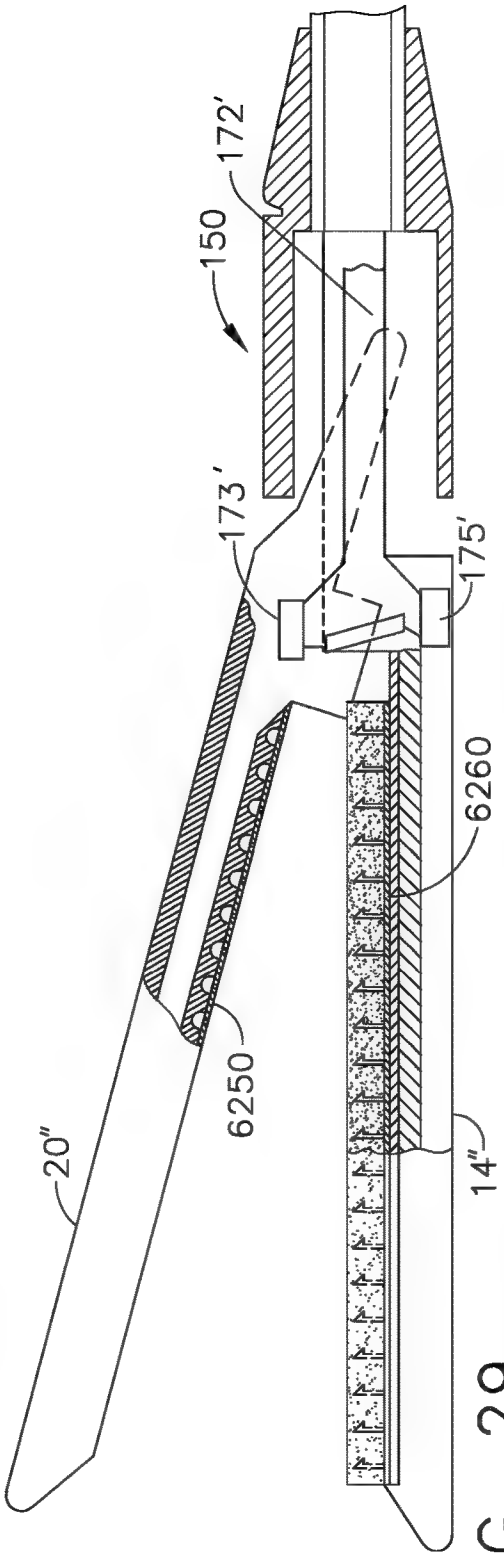

FIG. 29

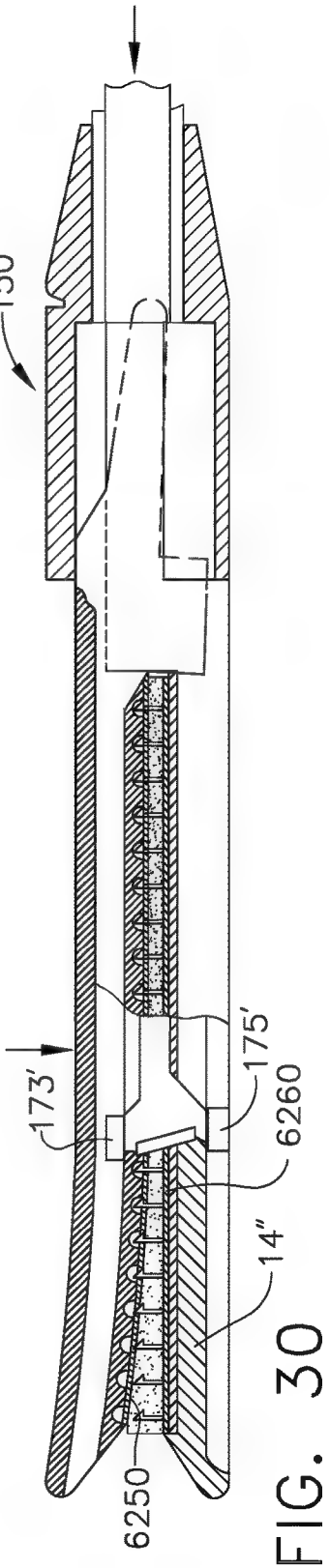

FIG. 30

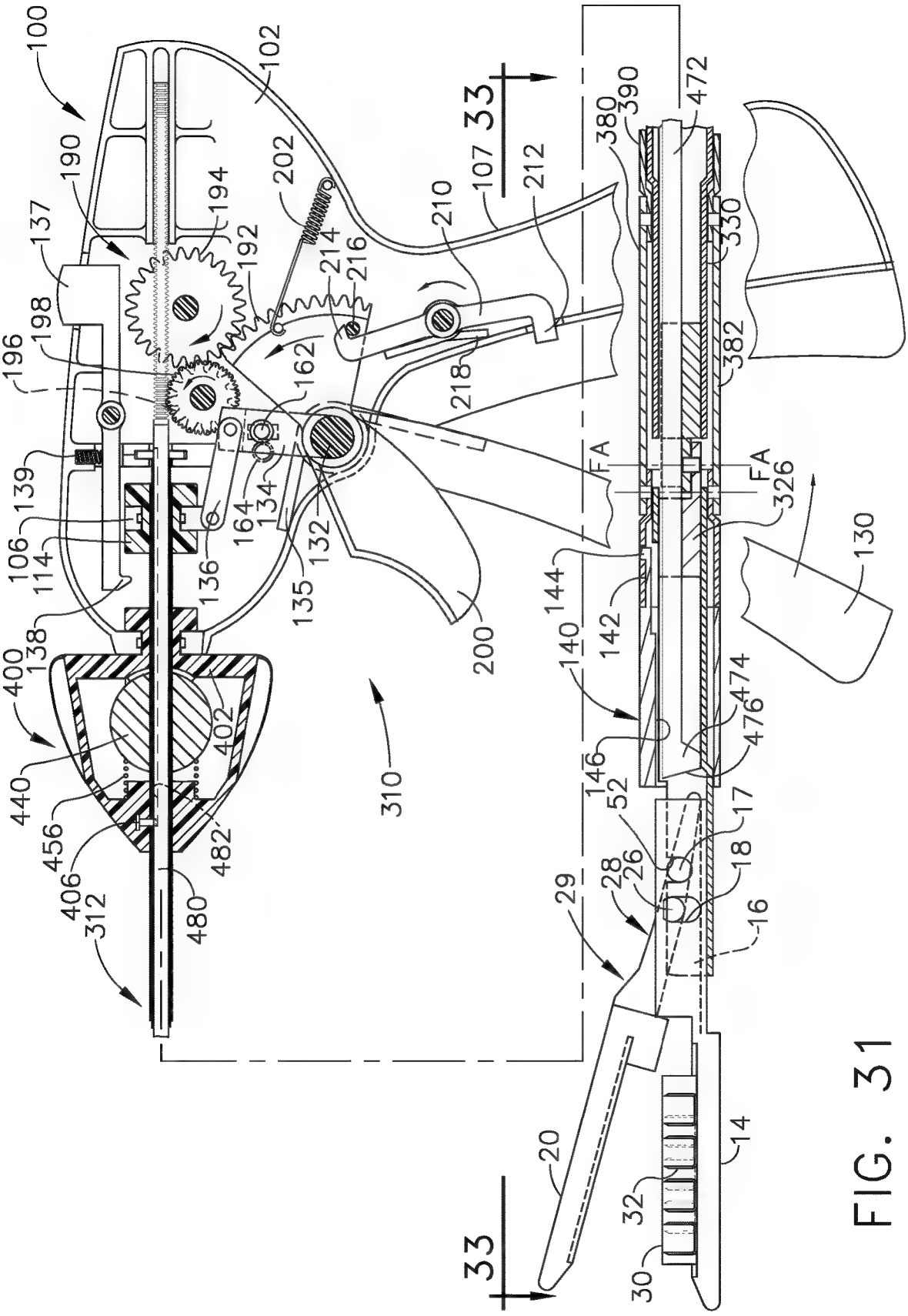
100
102
190
194
137
192
202
214
216
210
107
212
33
380
390
472
330
382
198
196
162
218
139
106
114
164
134
132
135
136
138
200
FA
FA
326
130
144
142
140
474
476
146
52
17
18
26
28
29
16
400
402
440
456
406
482
480
312
310
20
14
32
30
33

FIG. 31

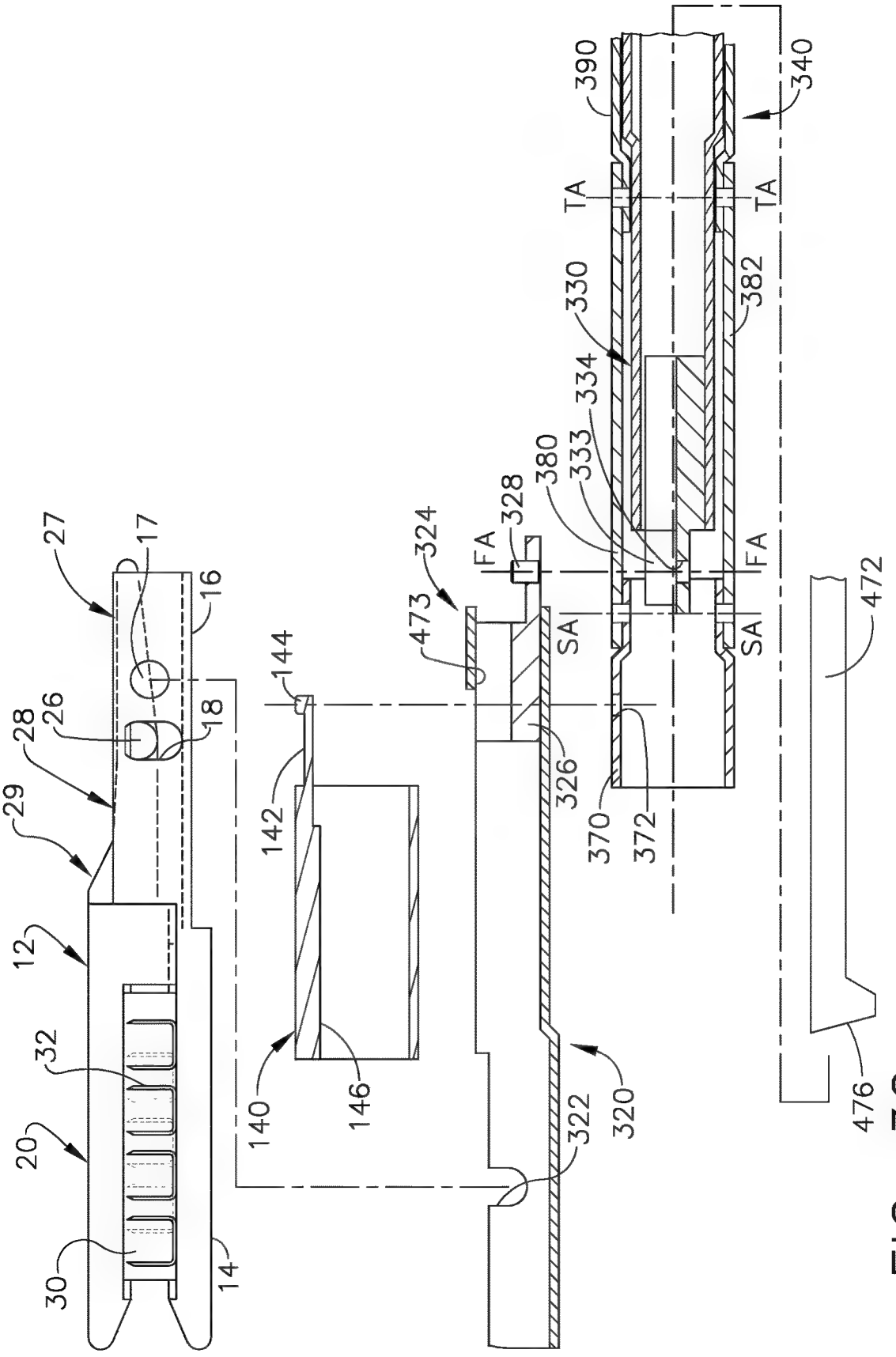
27
17
16
28
26
18
29
12
32
20
30
14
144
142
140
146
473
324
328
FA
SA
380
333
334
330
390
340
TA
382
326
370
372
322
320
472
476

FIG. 32

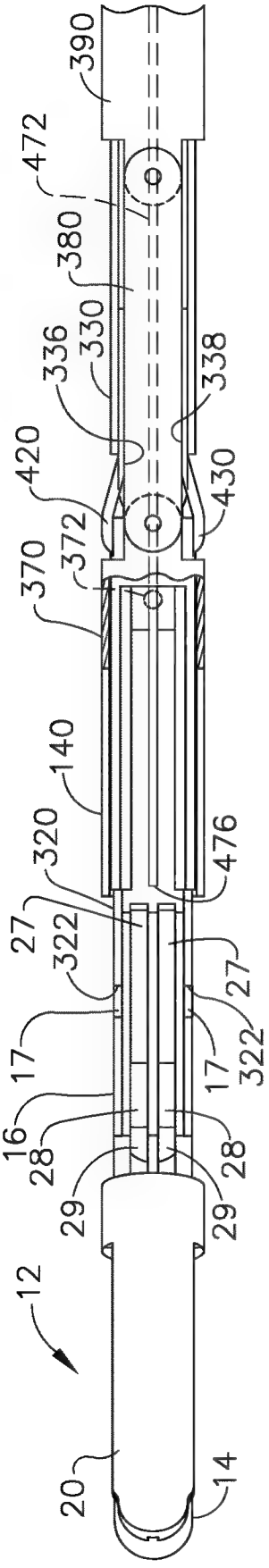
390
472
380
336
330
338
420
430
372
370
140
320
476
27
322
17
16
28
29
12
20
14

FIG. 33

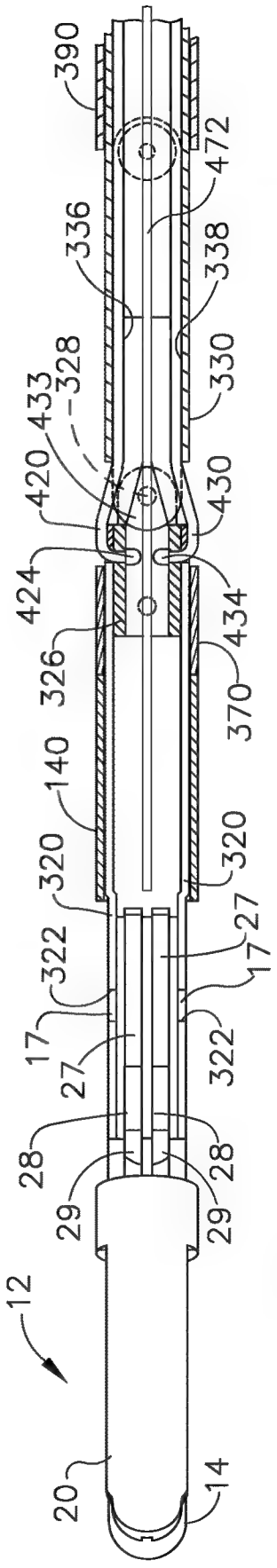
390
472
336
338
328
433
330
420
430
424
434
326
370
140
320
27
322
17
28
29
12
20
14

FIG. 34

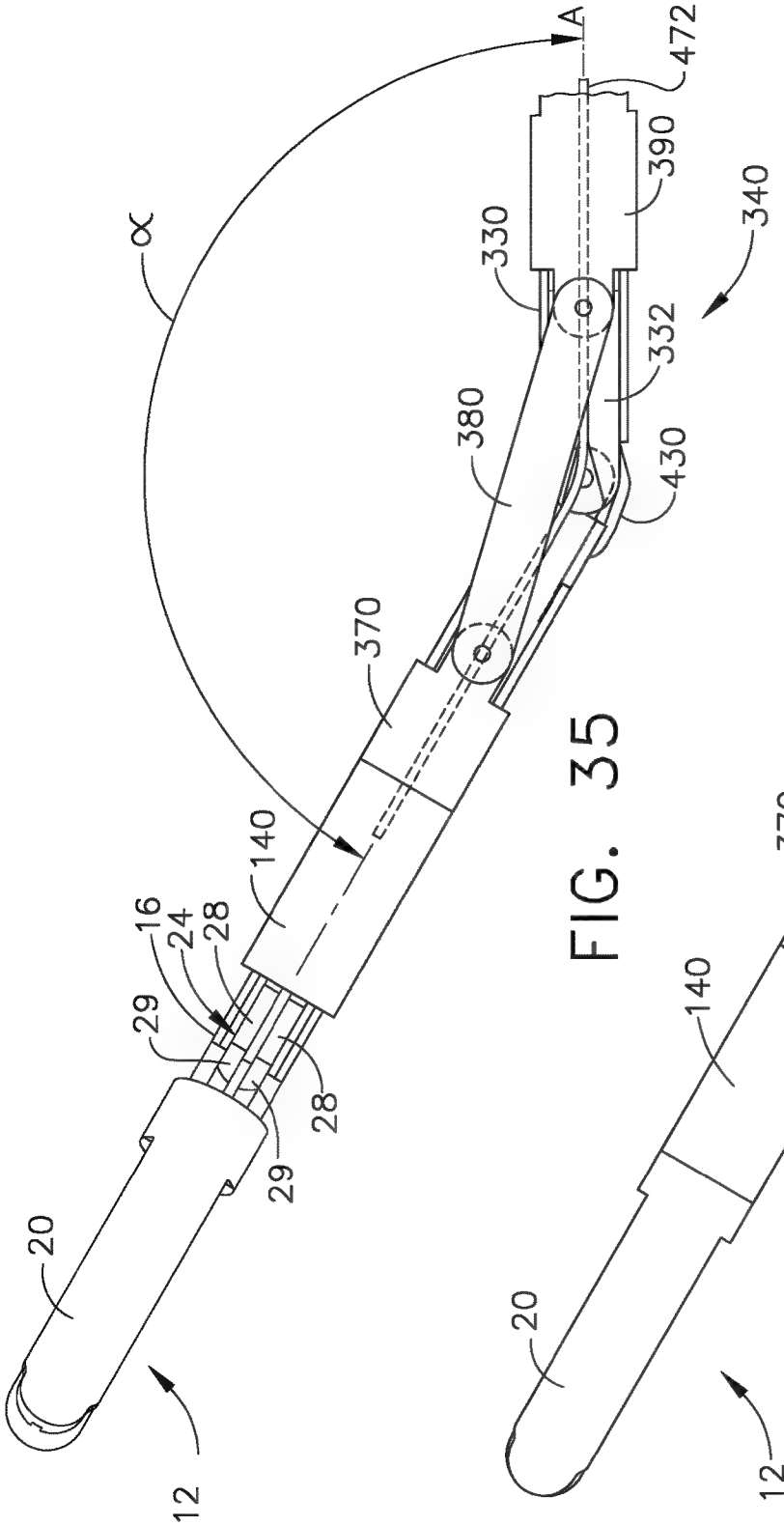
α
A
472
390
330
340
332
380
430
370
140
16
24
28
29
28
29
20
12

FIG. 35

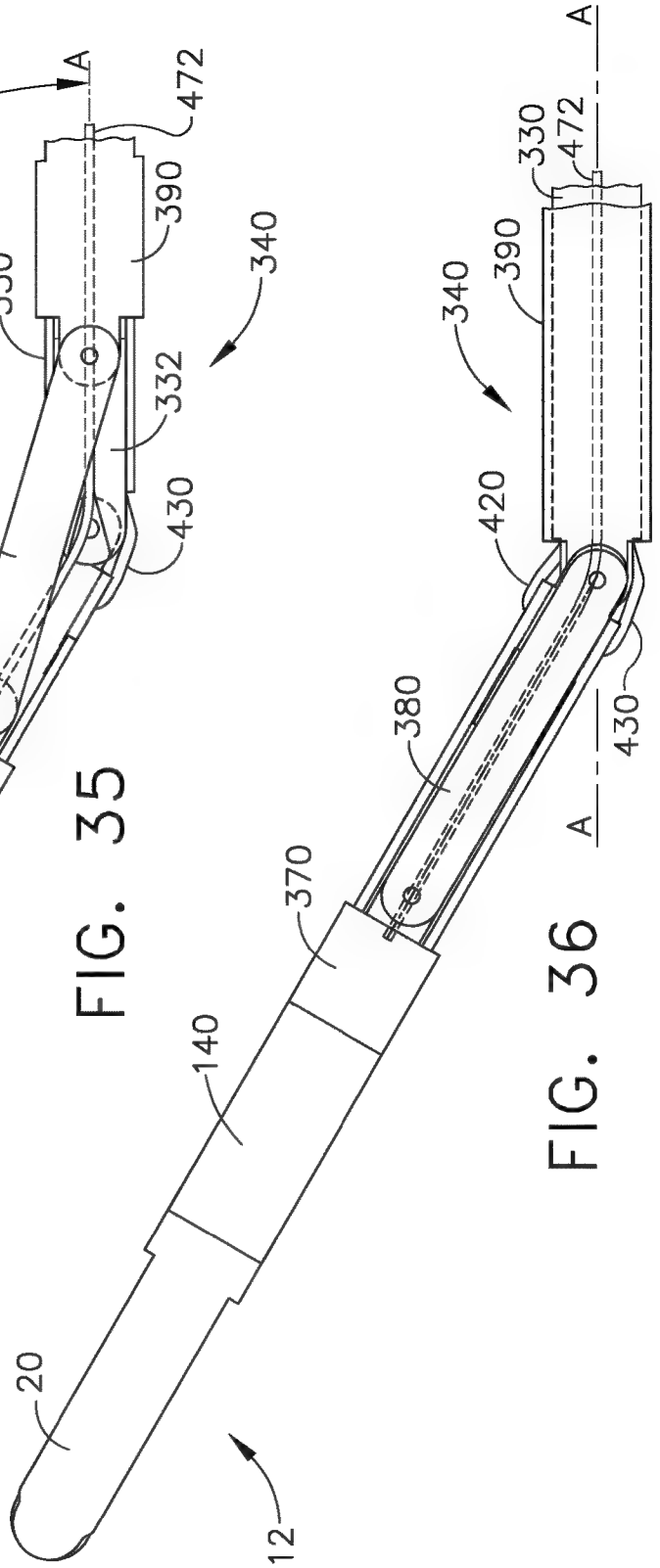
A
330
472
390
340
420
380
430
A
370
140
20
12

FIG. 36

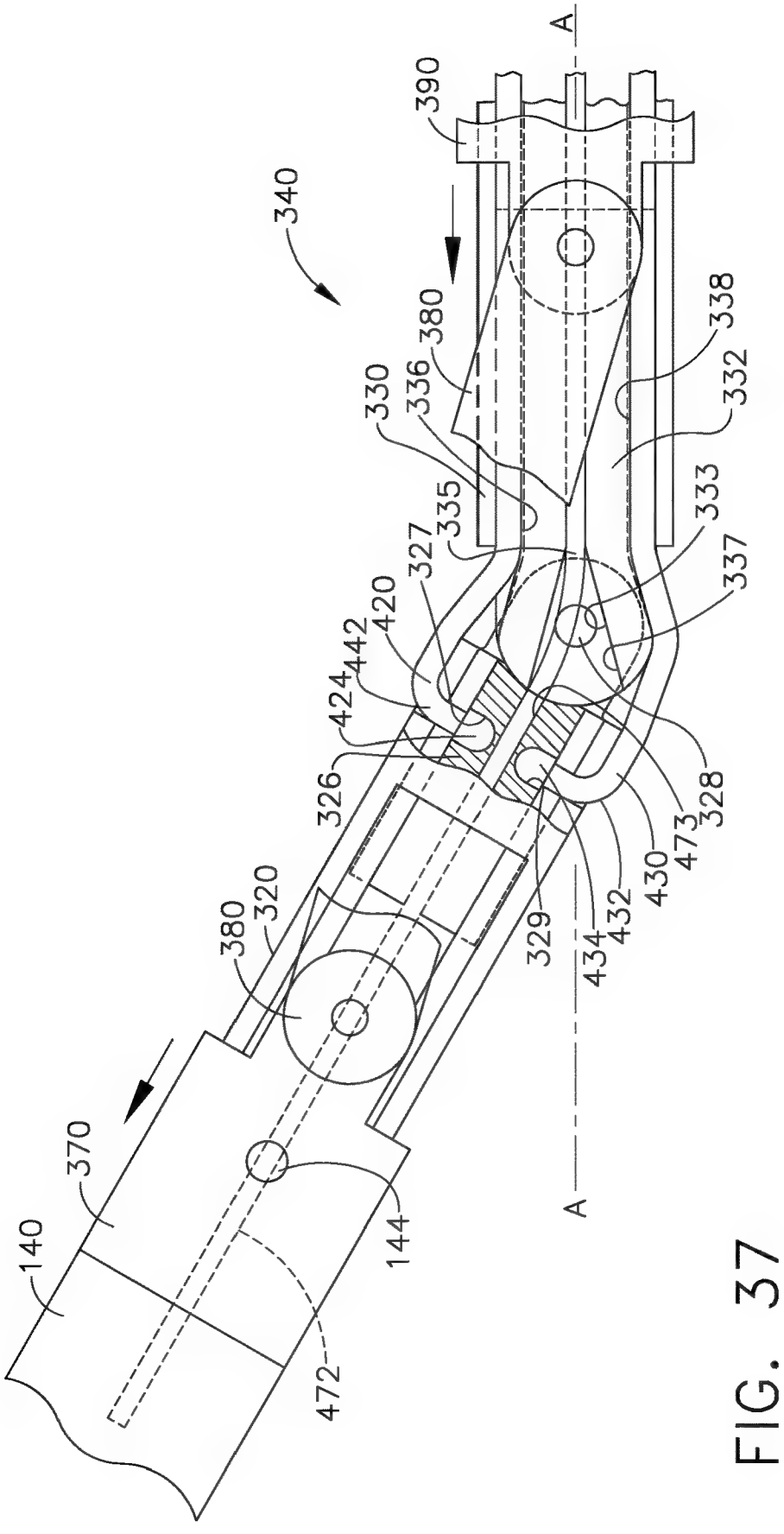
A
390
340
380
330
336
338
332
335
327
333
337
420
442
424
326
328
473
430
432
434
329
380
320
370
140
144
472
A

FIG. 37

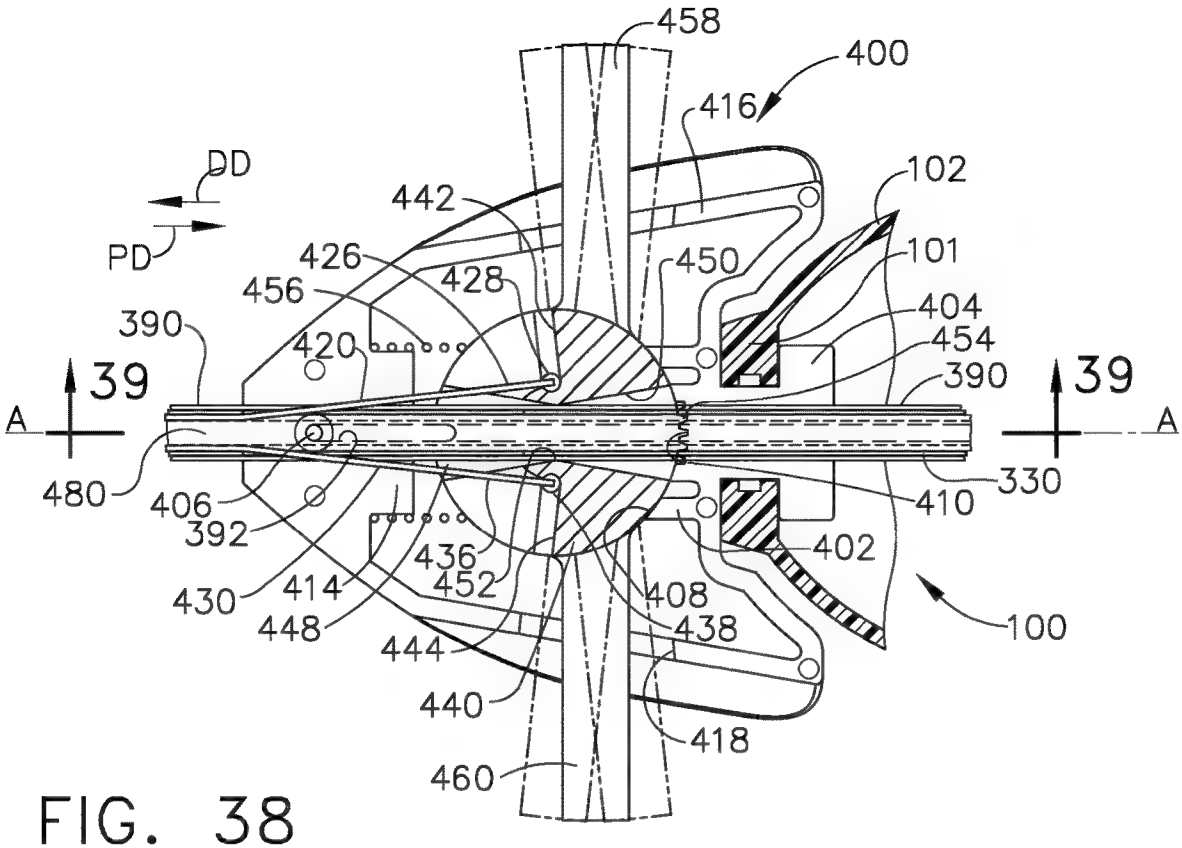
458
400
416
DD
PD
442
102
426
428
450
101
456
404
390
420
454
39
390
39
A
A
480
406
330
410
392
436
402
430
414
452
408
448
438
100
444
440
418
460

FIG. 38

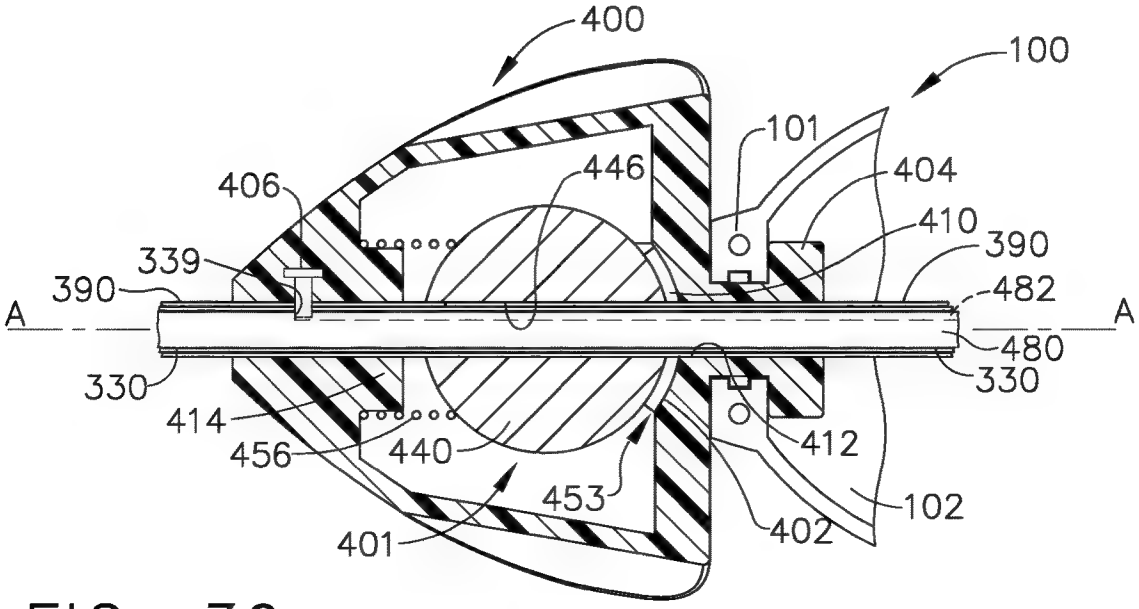
400
100
101
446
404
406
410
339
390
390
482
A
A
480
330
330
414
412
456
440
453
102
401
402

FIG. 39

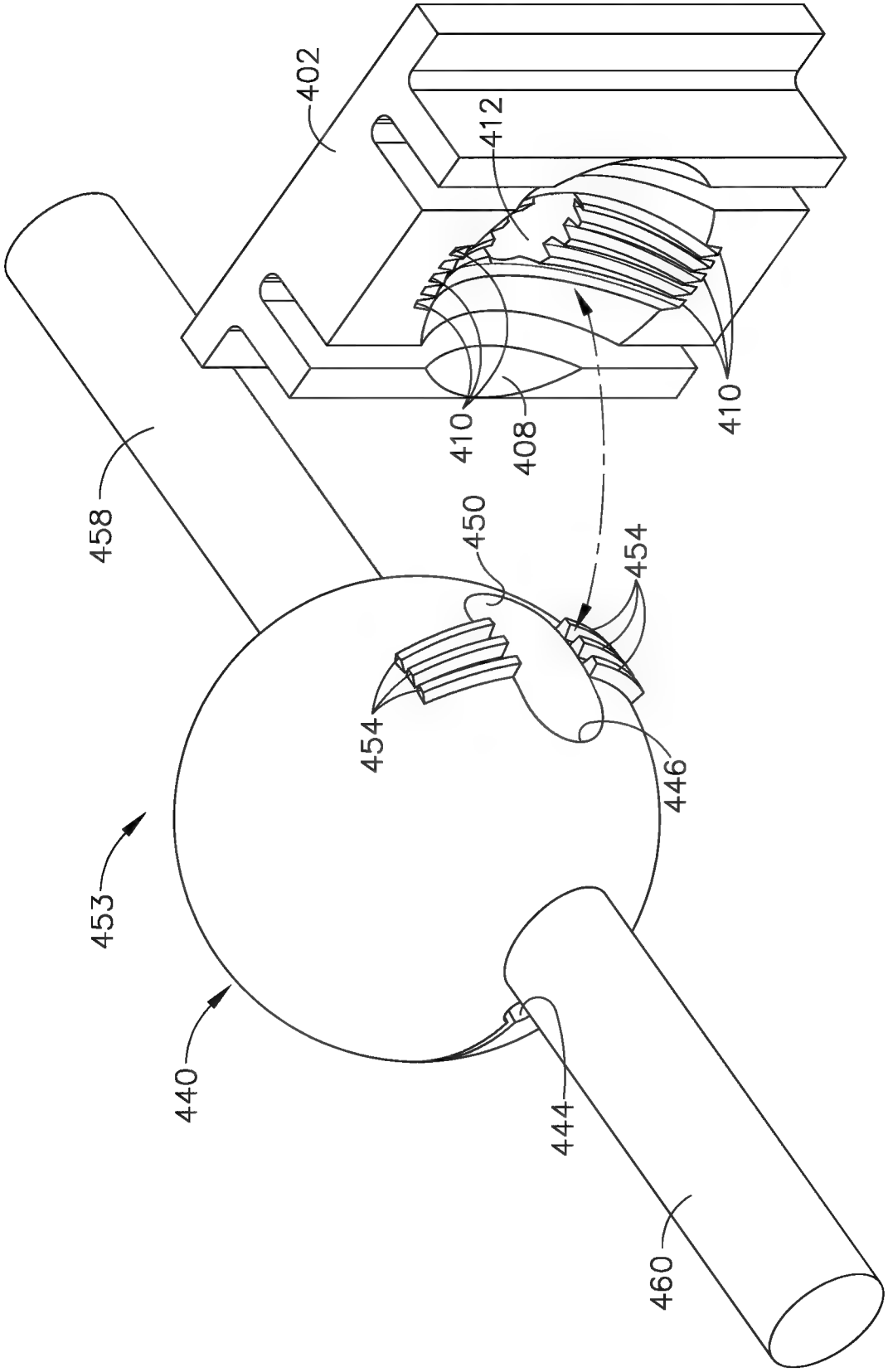

FIG. 40

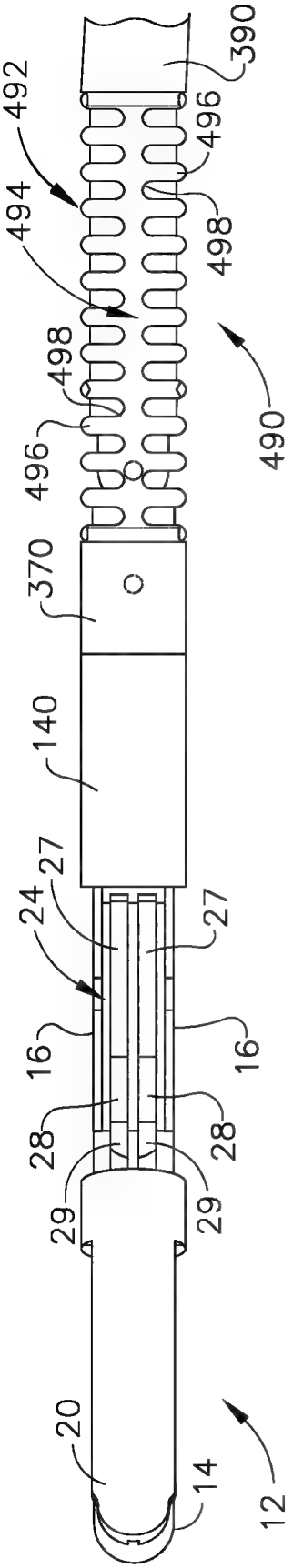
492
494
496
498
490
390
370
140
27
24
16
28
29
20
14
12

FIG. 41

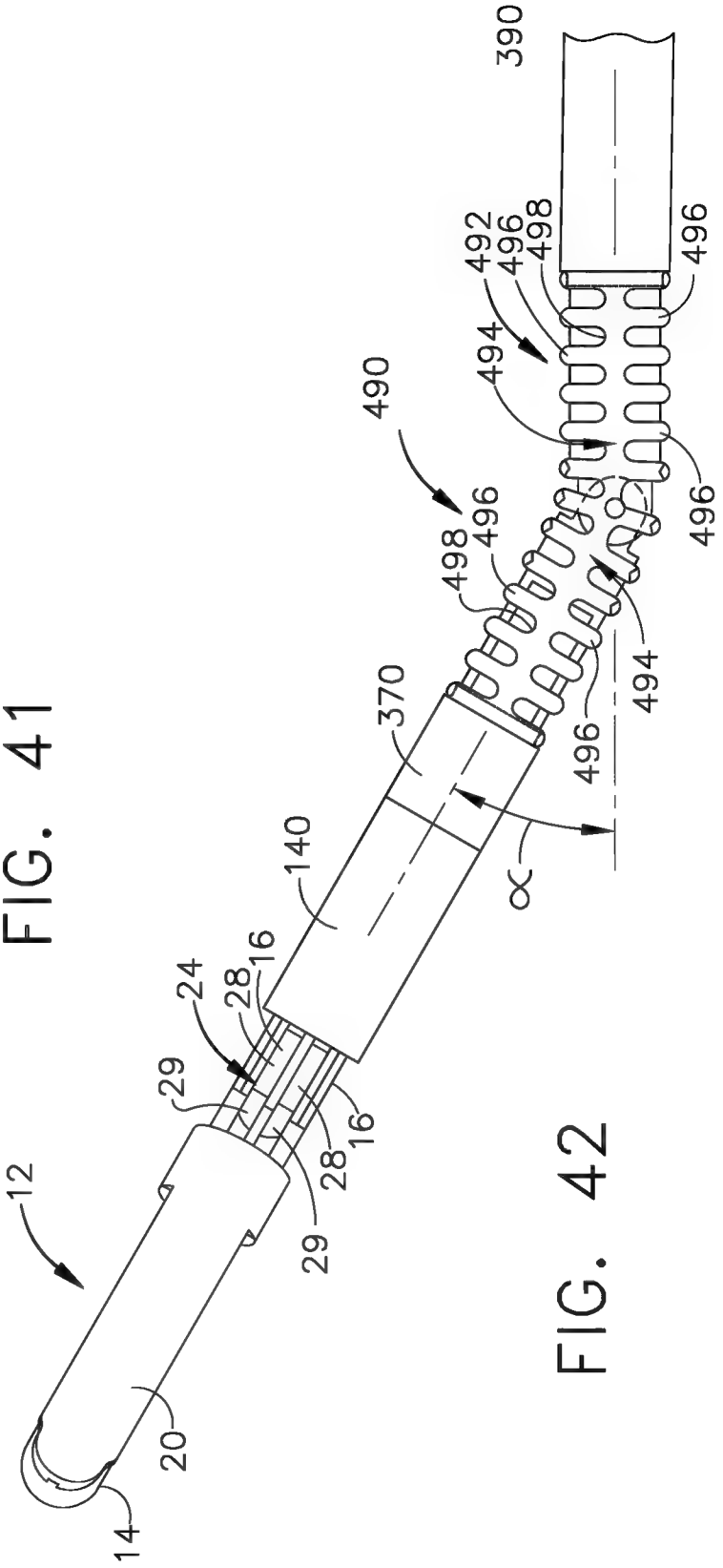
390
492
496
498
494
490
370
140
24
28
16
29
12
20
14
α

FIG. 42

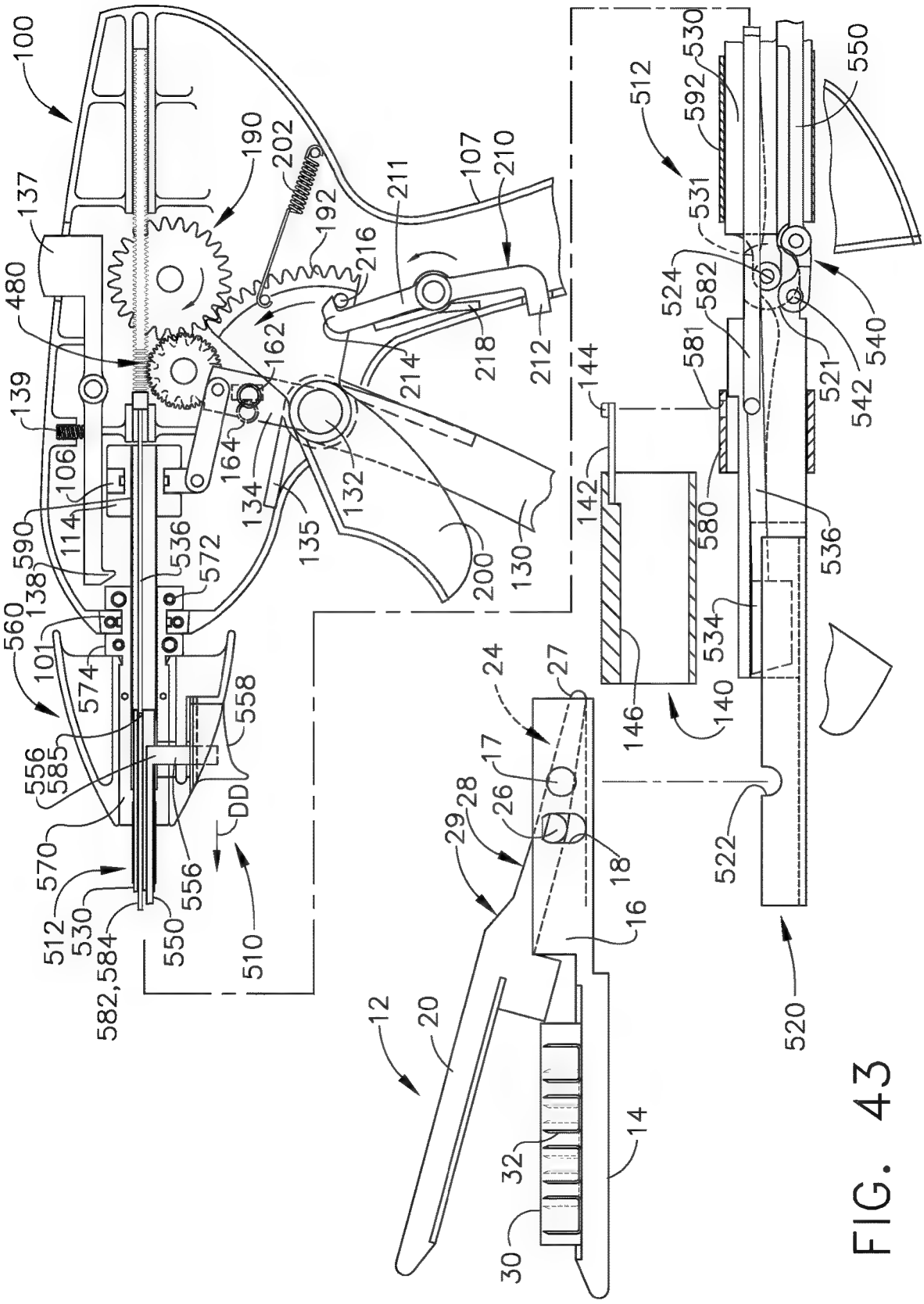
100
137
480
139
106
114
590
138
560
101
574
556
585
570
512
530
582,584
550
556
558
DD
510
190
202
192
216
211
107
210
162
214
218
212
164
134
135
132
200
130
512
592
530
550
531
524
582
581
540
521
542
144
142
580
536
534
146
140
522
520
24
27
17
28
26
29
18
16
12
20
14
32
30

FIG. 43

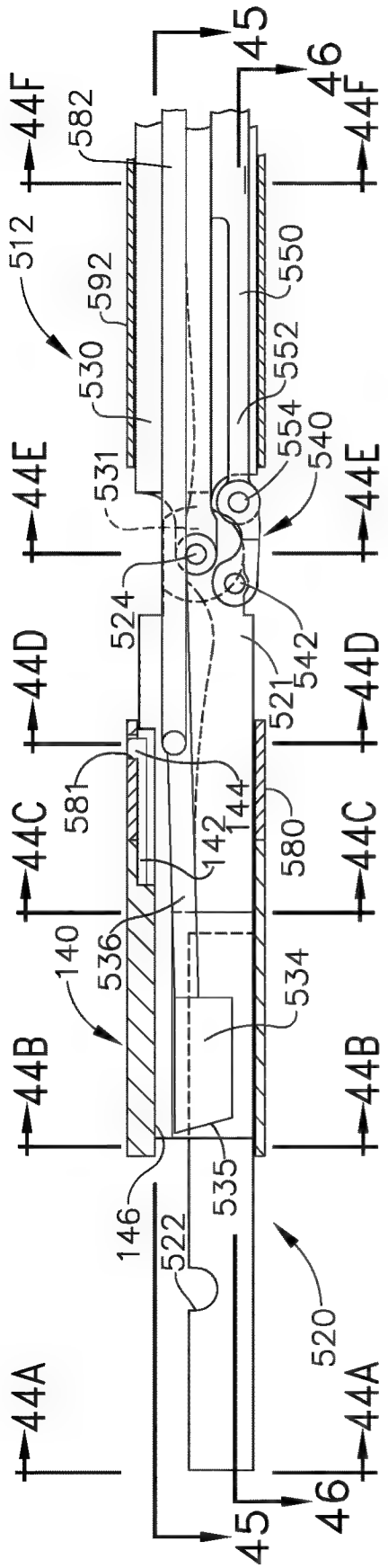

FIG. 44

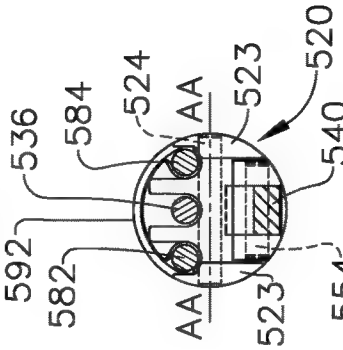

FIG. 44E

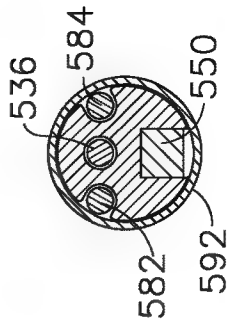

FIG. 44F

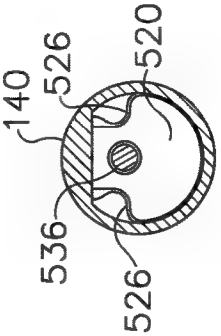

FIG. 44C

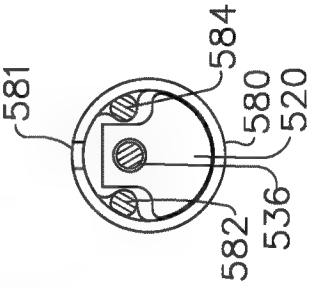

FIG. 44D

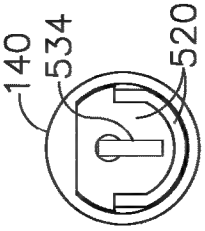

FIG. 44A

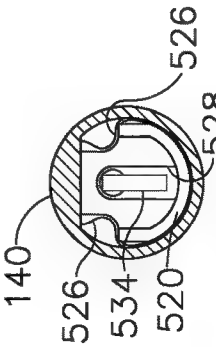

FIG. 44B

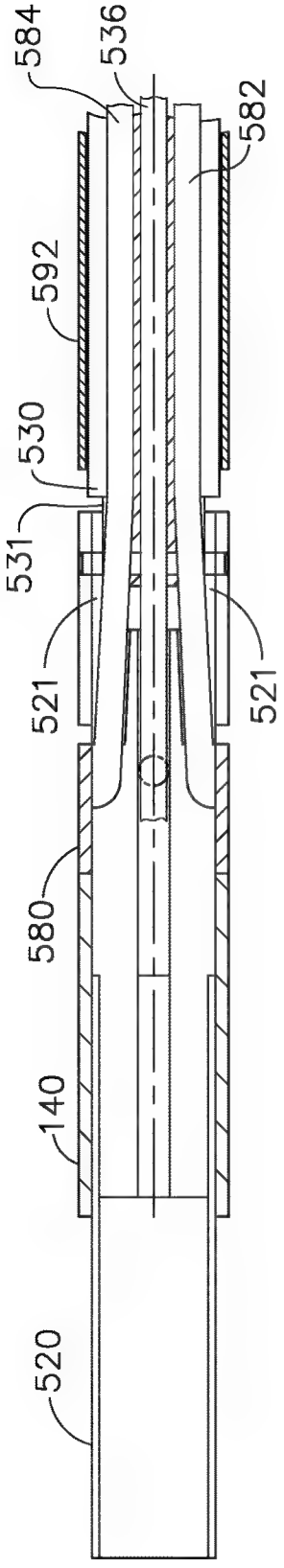
584
536
582
592
530
531
521
521
580
140
520

FIG. 45

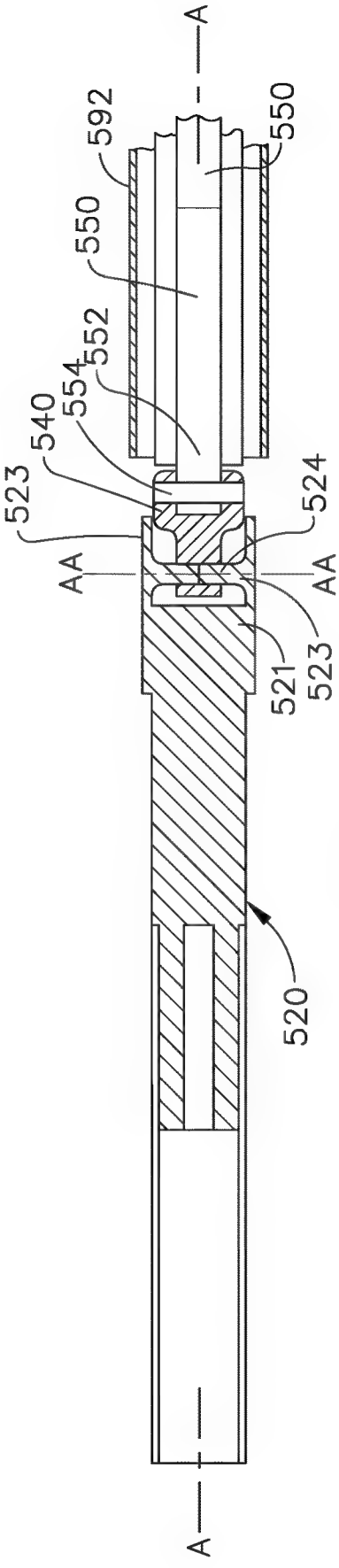
A
592
550
550
552
554
540
523
524
AA
AA
521
523
520
A

FIG. 46

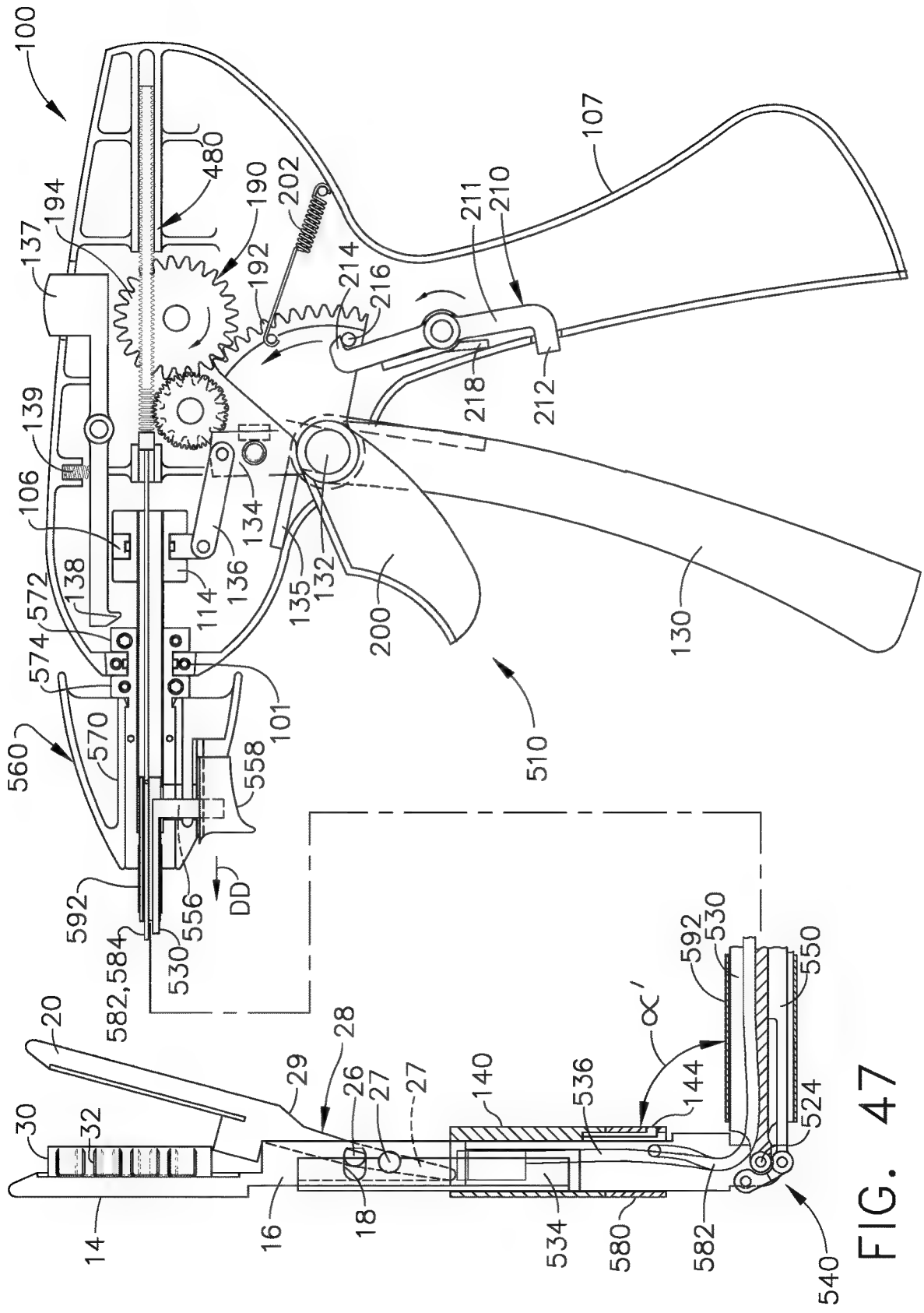
100
107
480
190
202
194
137
192
214
216
211
210
218
212
139
106
134
136
114
135
132
200
130
138
572
574
101
510
560
570
558
592
556
DD
582,584
530
20
28
29
26
27
27
140
536
144
α'
592
530
550
524
30
32
14
16
18
534
580
582
540

FIG. 47

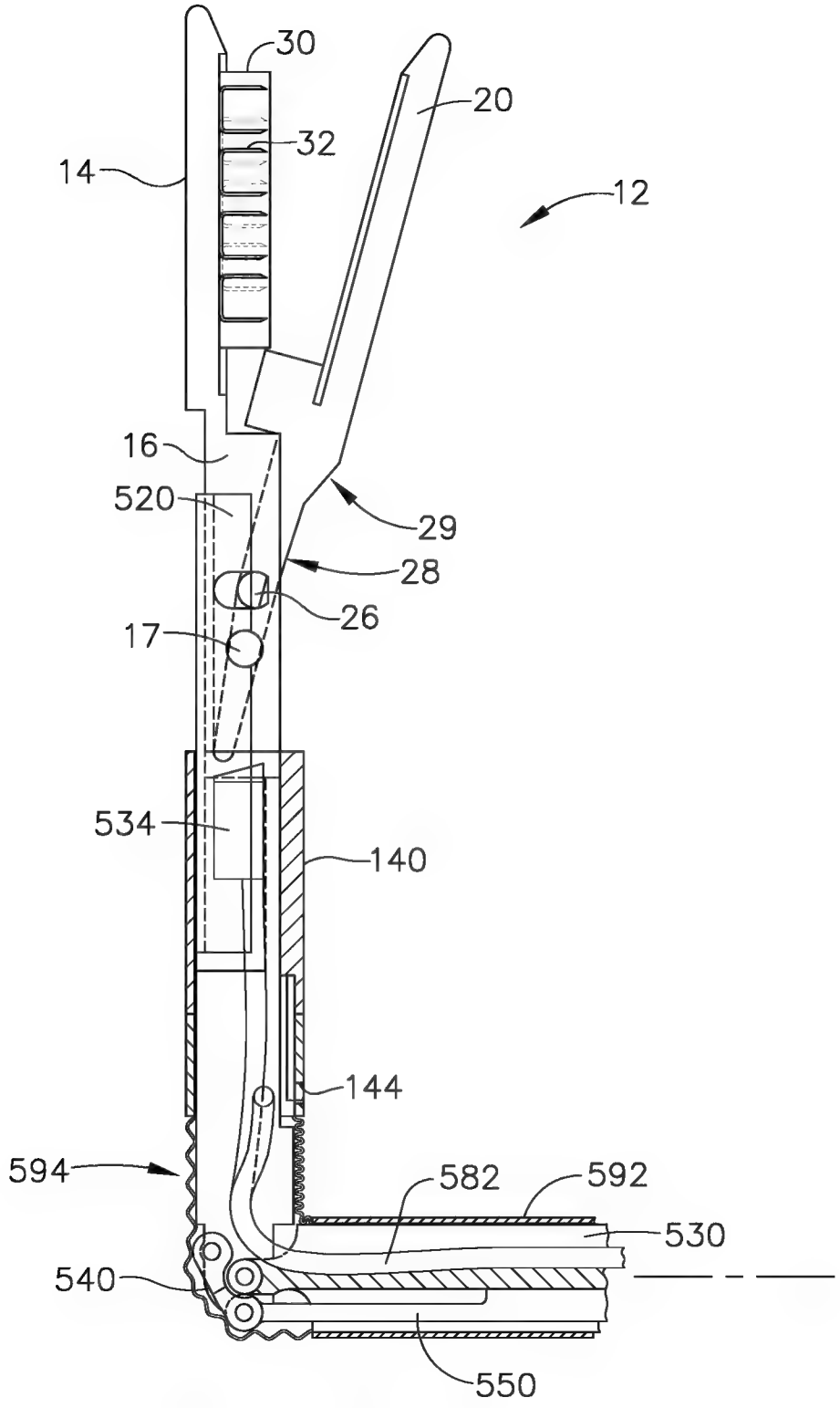
30
20
32
14
12
16
520
29
28
26
17
534
140
144
594
582
592
530
540
550

FIG. 48

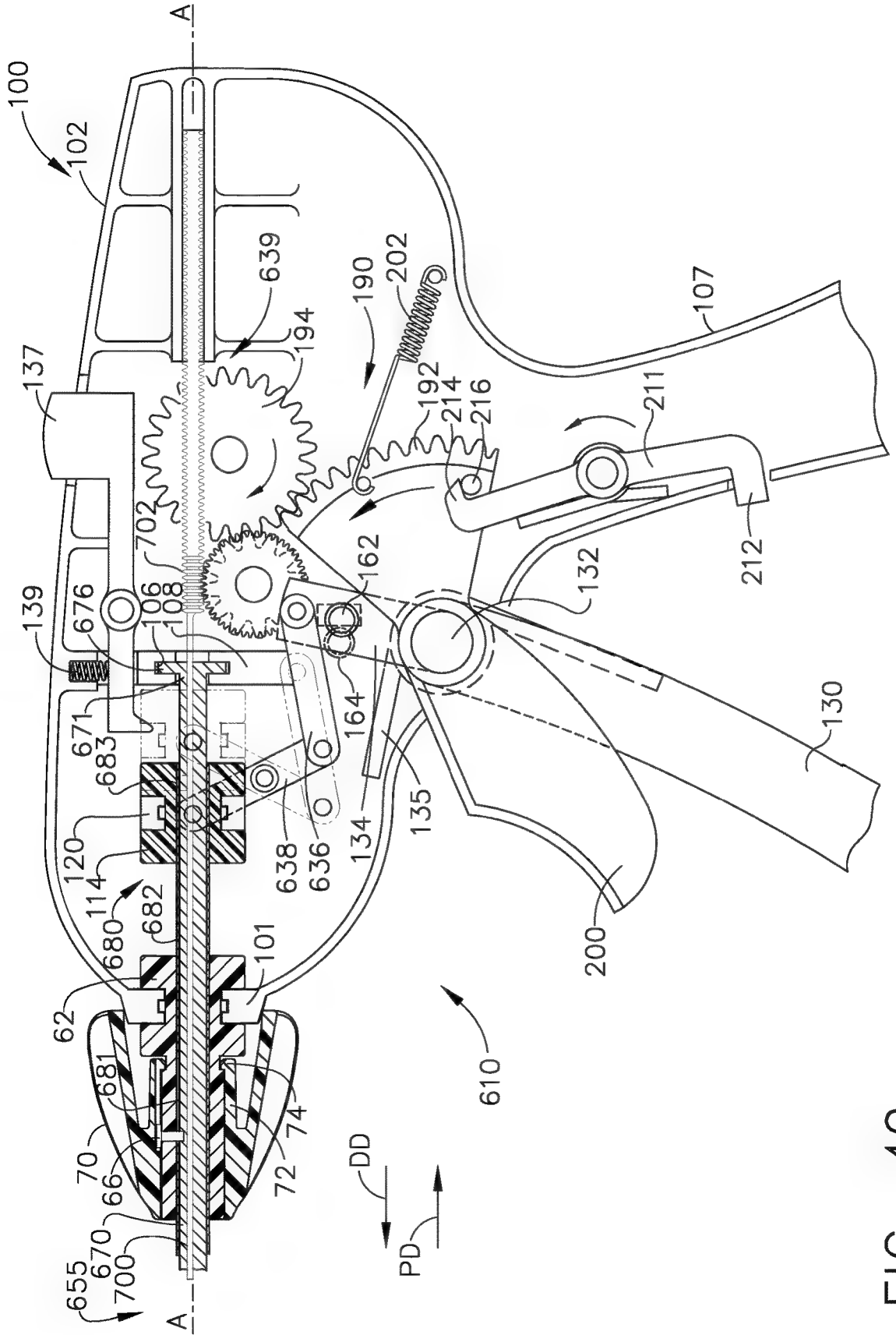
100
102
A
639
194
190
202
107
137
192
214
216
211
702
162
132
212
139
676
106
108
164
130
671
683
120
114
638
636
134
135
200
680
682
101
62
610
681
70
66
74
72
DD
PD
670
700
655
A

FIG. 49

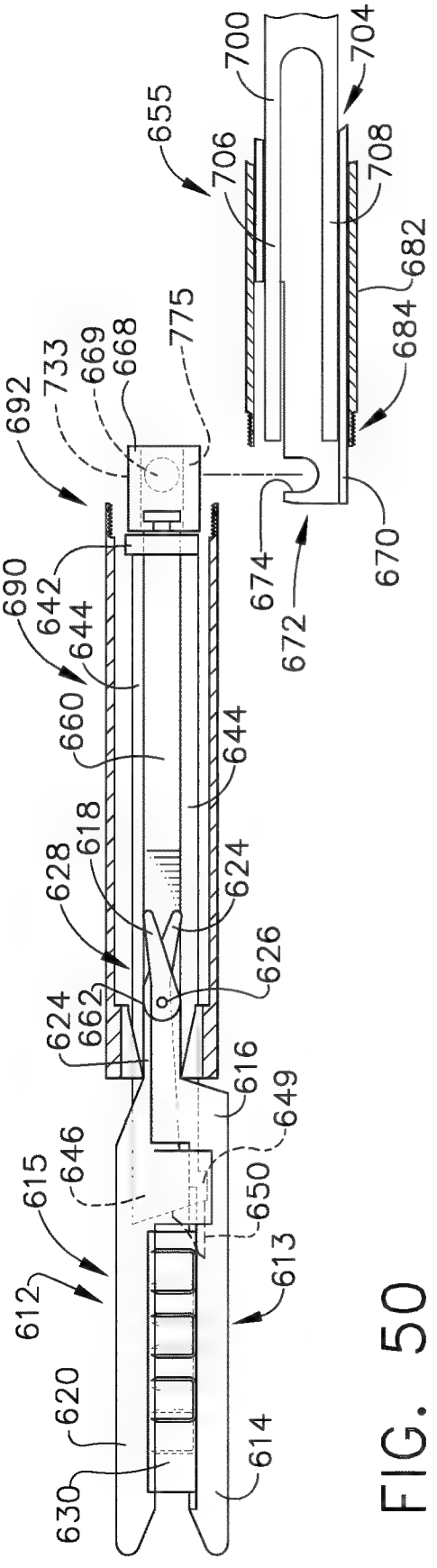
700
704
655
706
708
682
684
775
733
669
668
692
690
642
644
660
644
628
618
624
626
624
662
616
649
646
615
650
613
612
620
614
630
672
674
670

FIG. 50

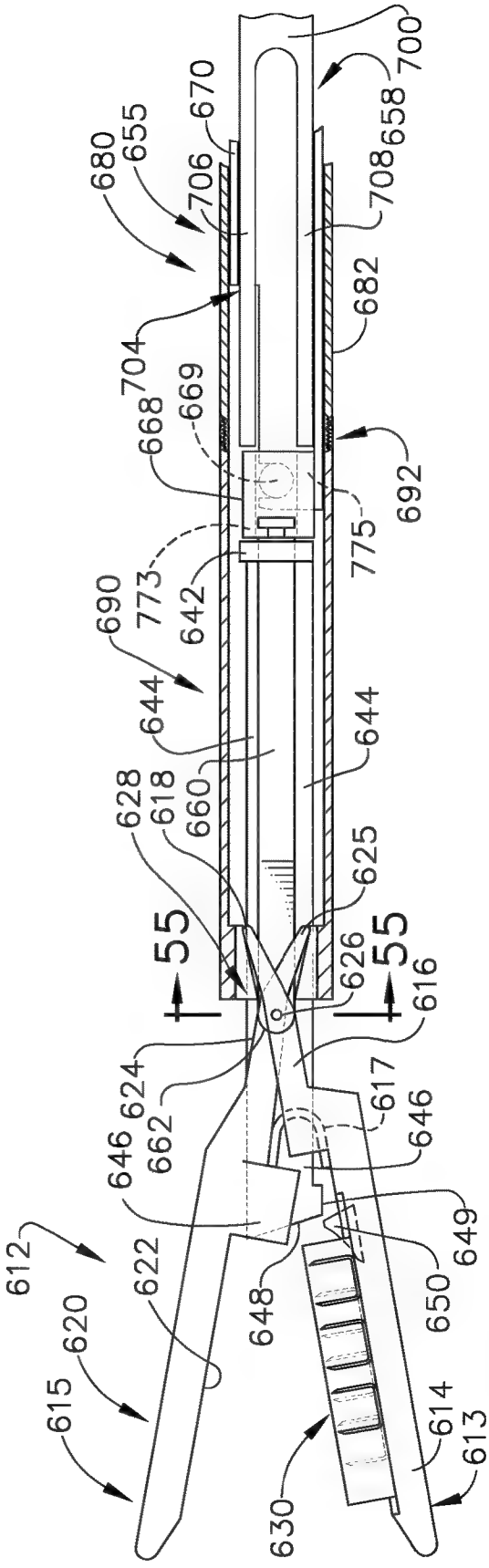
700
658
670
680
655
706
708
682
704
668
669
692
775
773
690
642
644
644
628
618
660
625
55
55
626
616
624
662
617
646
646
649
612
622
650
620
615
648
614
613
630

FIG. 51

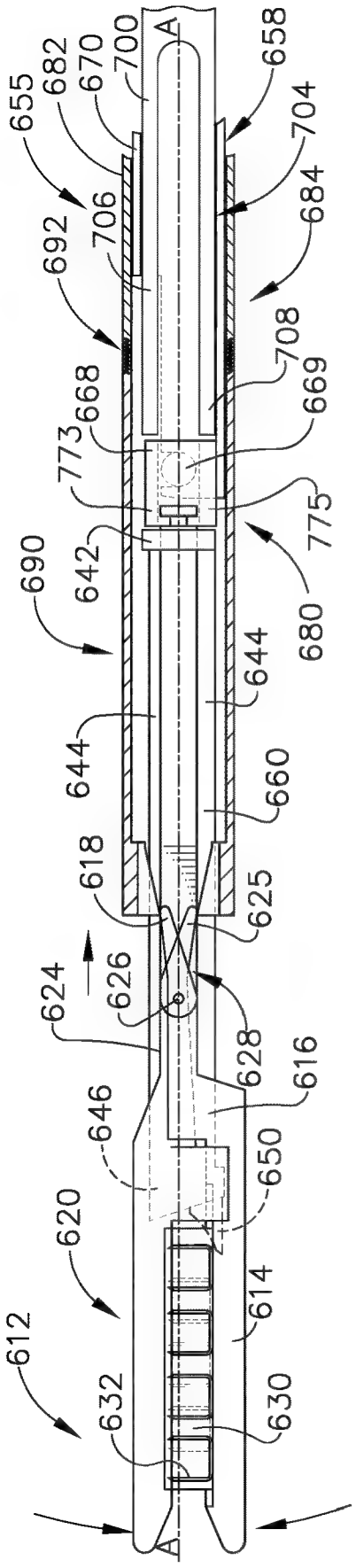
655
682
670
700
A
658
704
684
692
706
708
669
668
773
775
690
642
680
644
660
618
625
624
626
628
616
646
650
620
614
612
632
630

FIG. 52

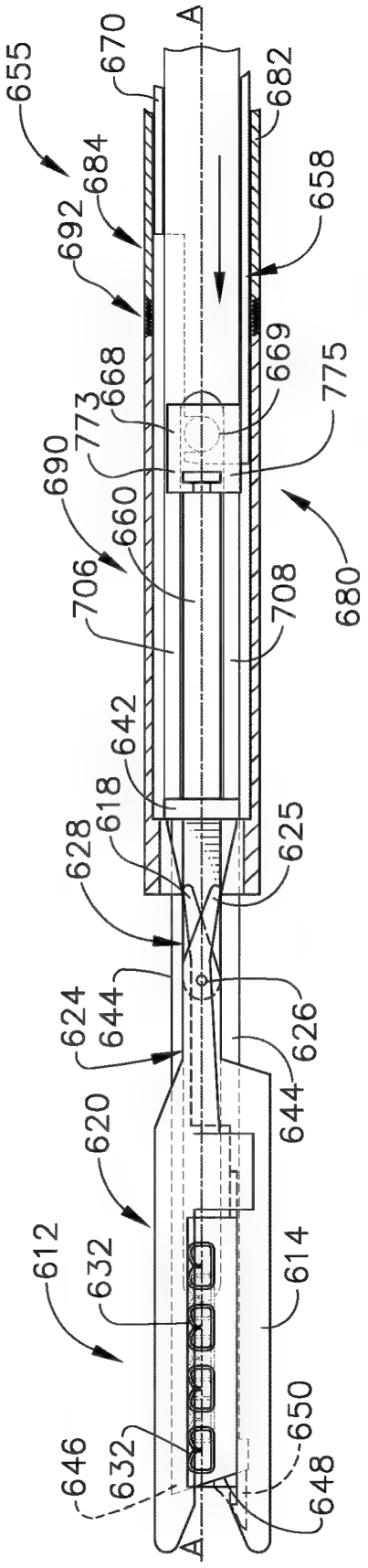
655
670
A
682
684
658
692
669
668
775
773
690
660
706
708
680
642
618
625
628
624
644
626
620
644
612
632
614
646
650
632
648

FIG. 53

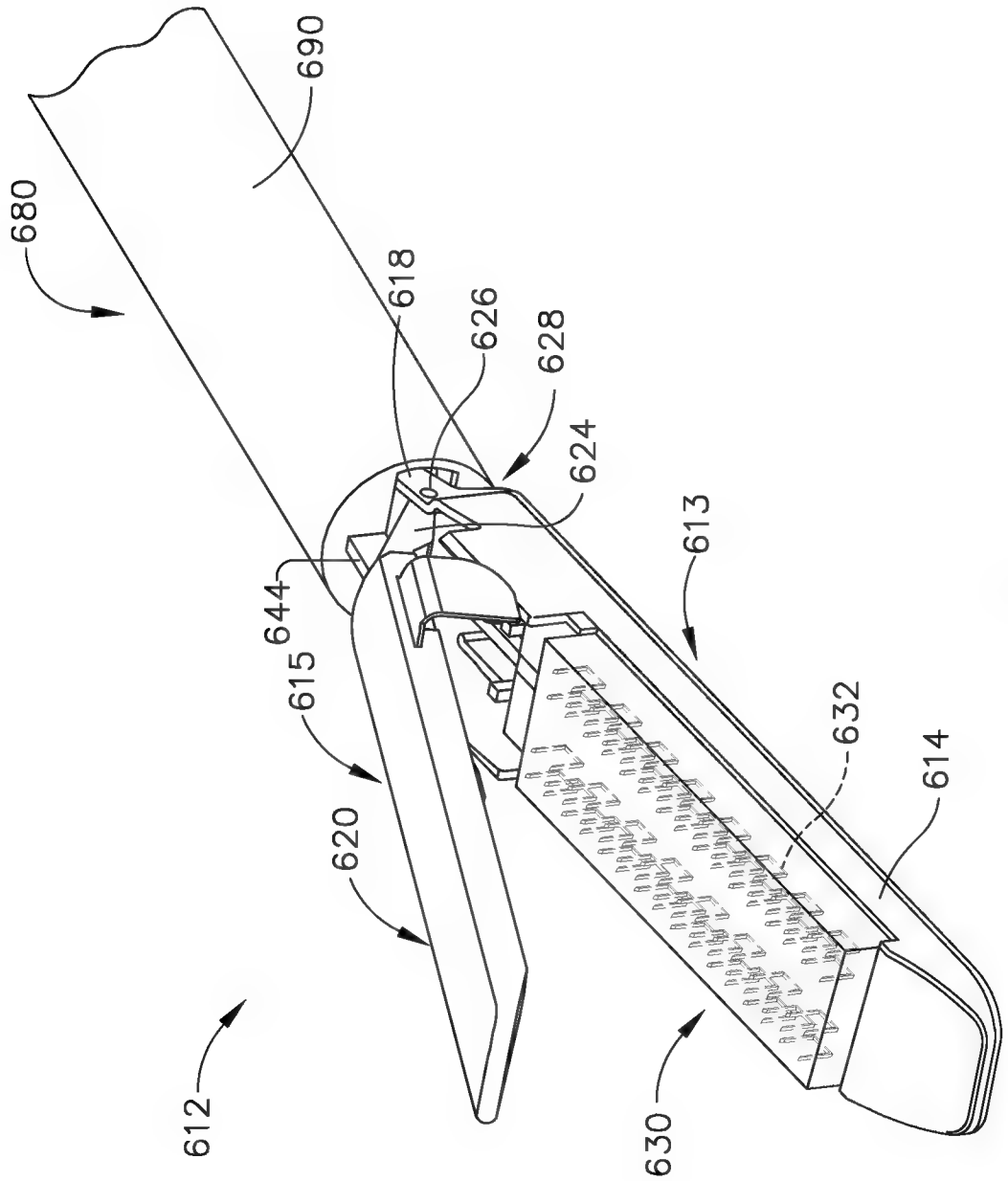

FIG. 54

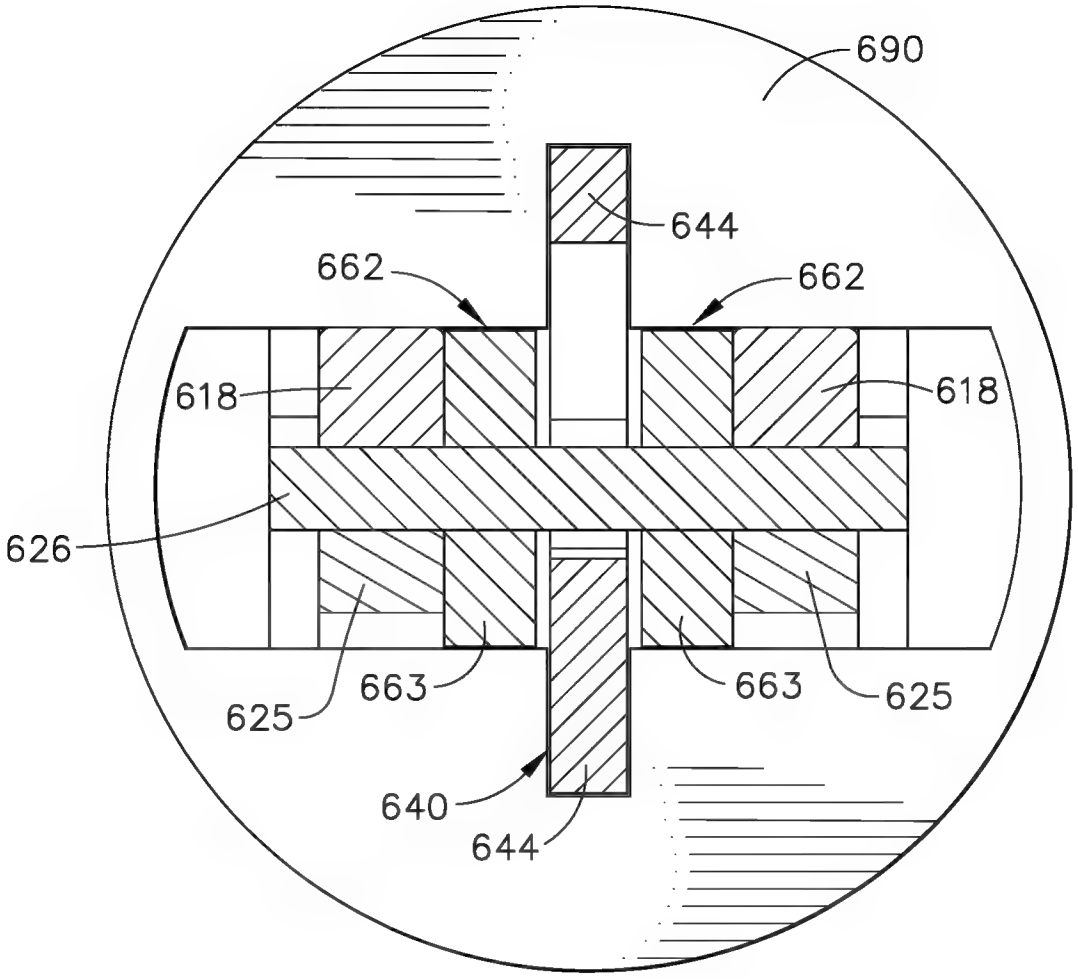

FIG. 55

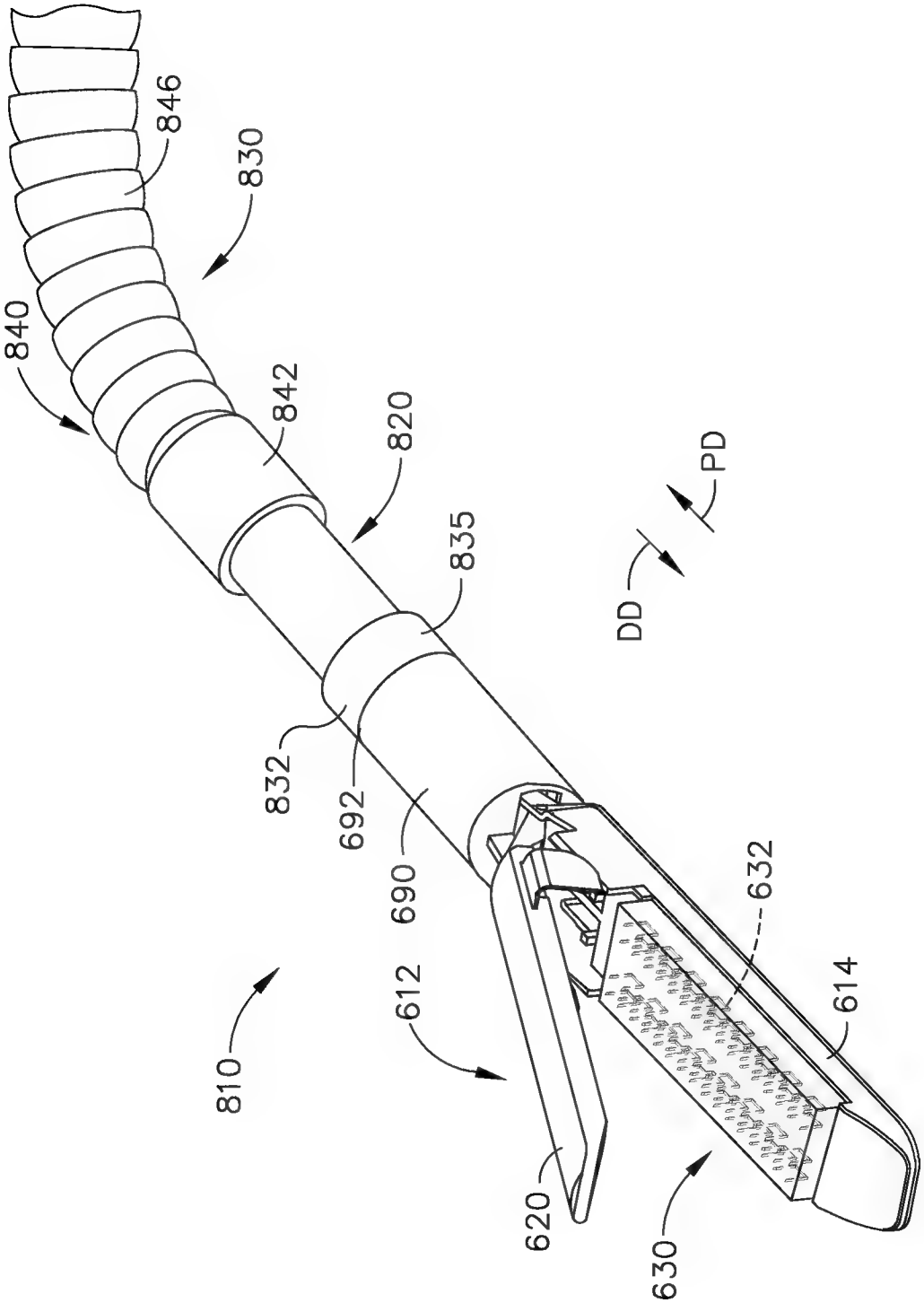

FIG. 56

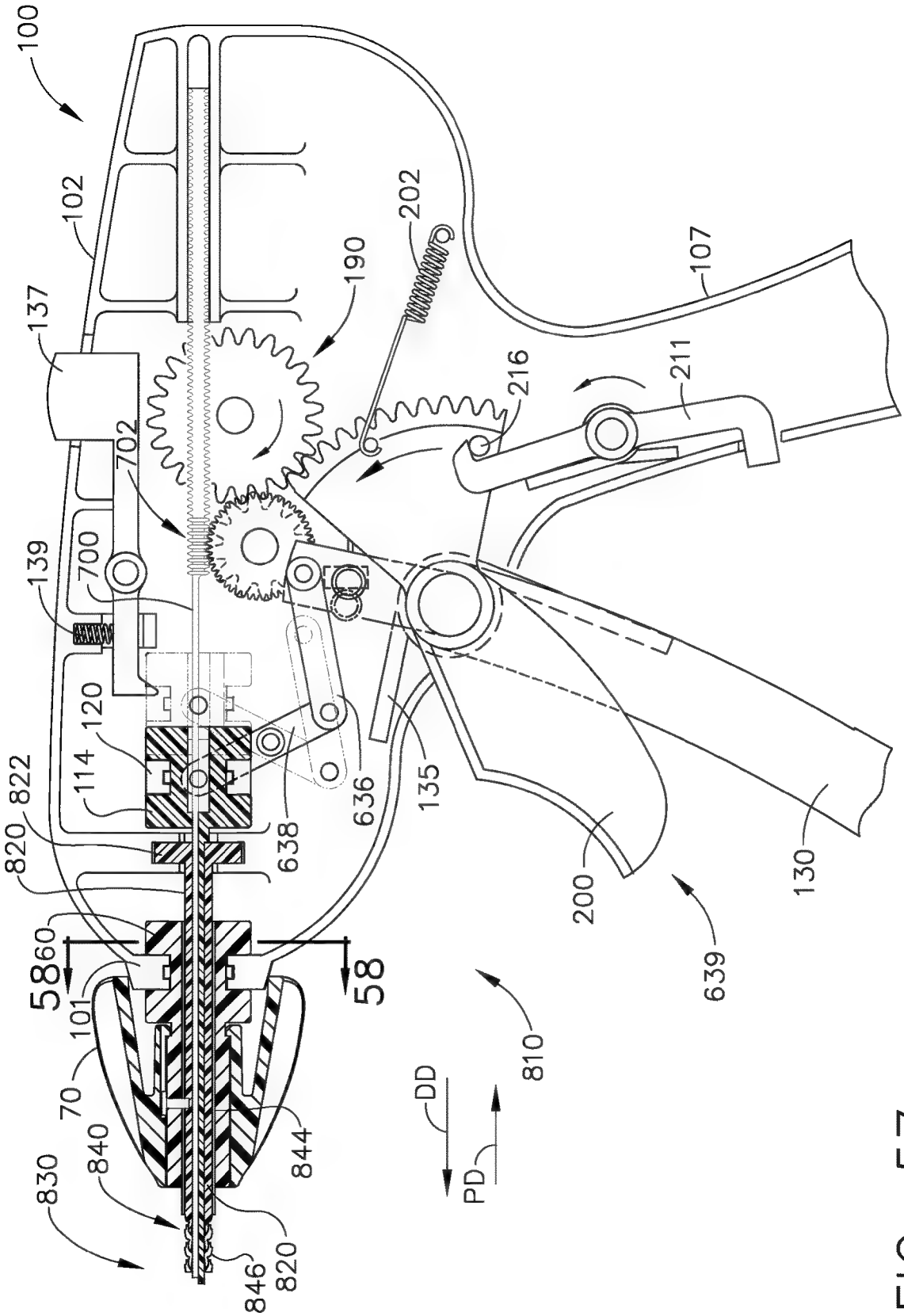
100
102
137
190
202
107
216
211
702
700
139
120
114
822
820
638
636
135
200
130
639
60
58
58
101
70
840
844
830
846
820
DD
PD
810

FIG. 57

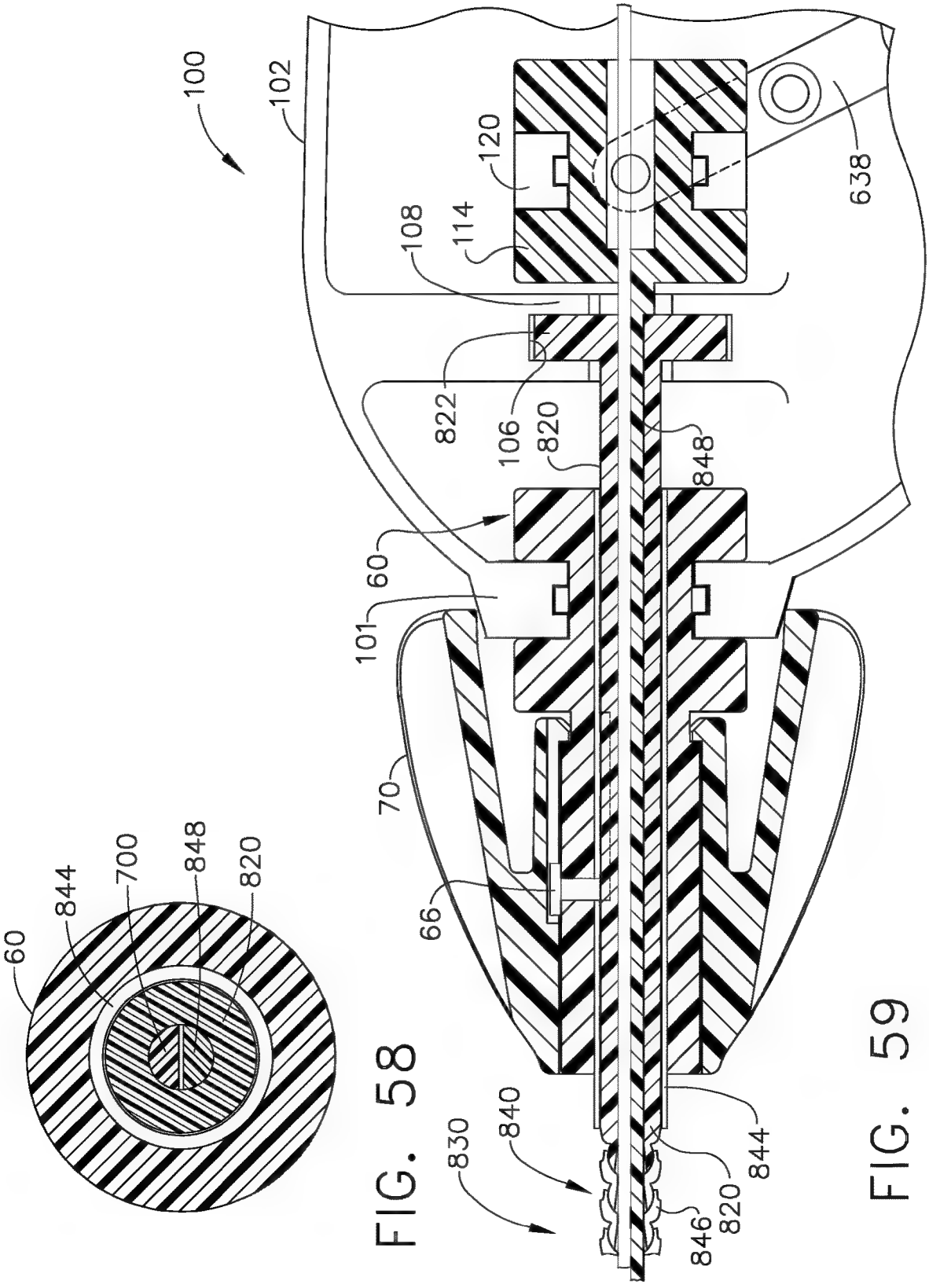
100
102
120
638
108
114
822
106
820
848
60
101
70
66
830
840
844
846
820

FIG. 59

60
844
700
848
820

FIG. 58

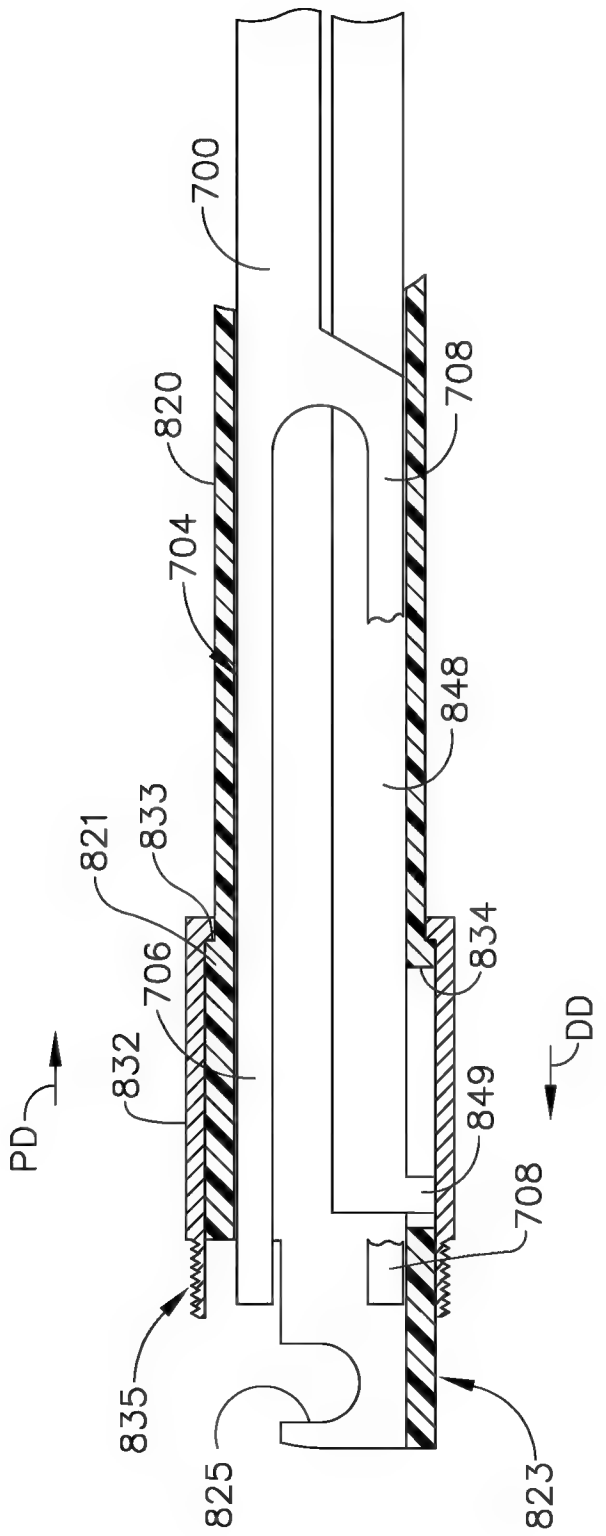

FIG. 60

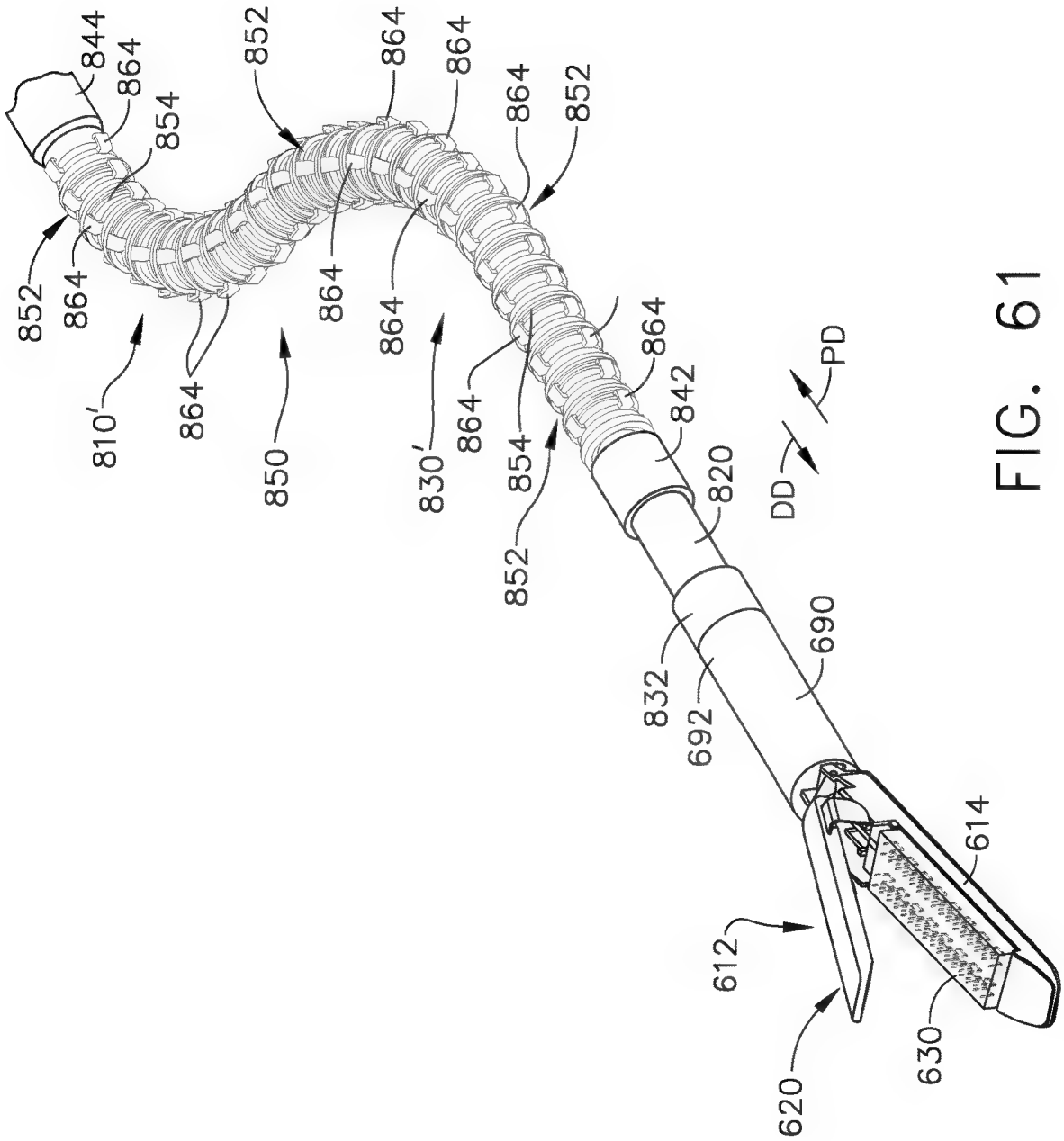
844
864
854
852
864
864
864
852
852
864
810'
864
850
864
864
830'
864
854
852
864
842
820
DD
PD
832
692
690
614
612
620
630

FIG. 61

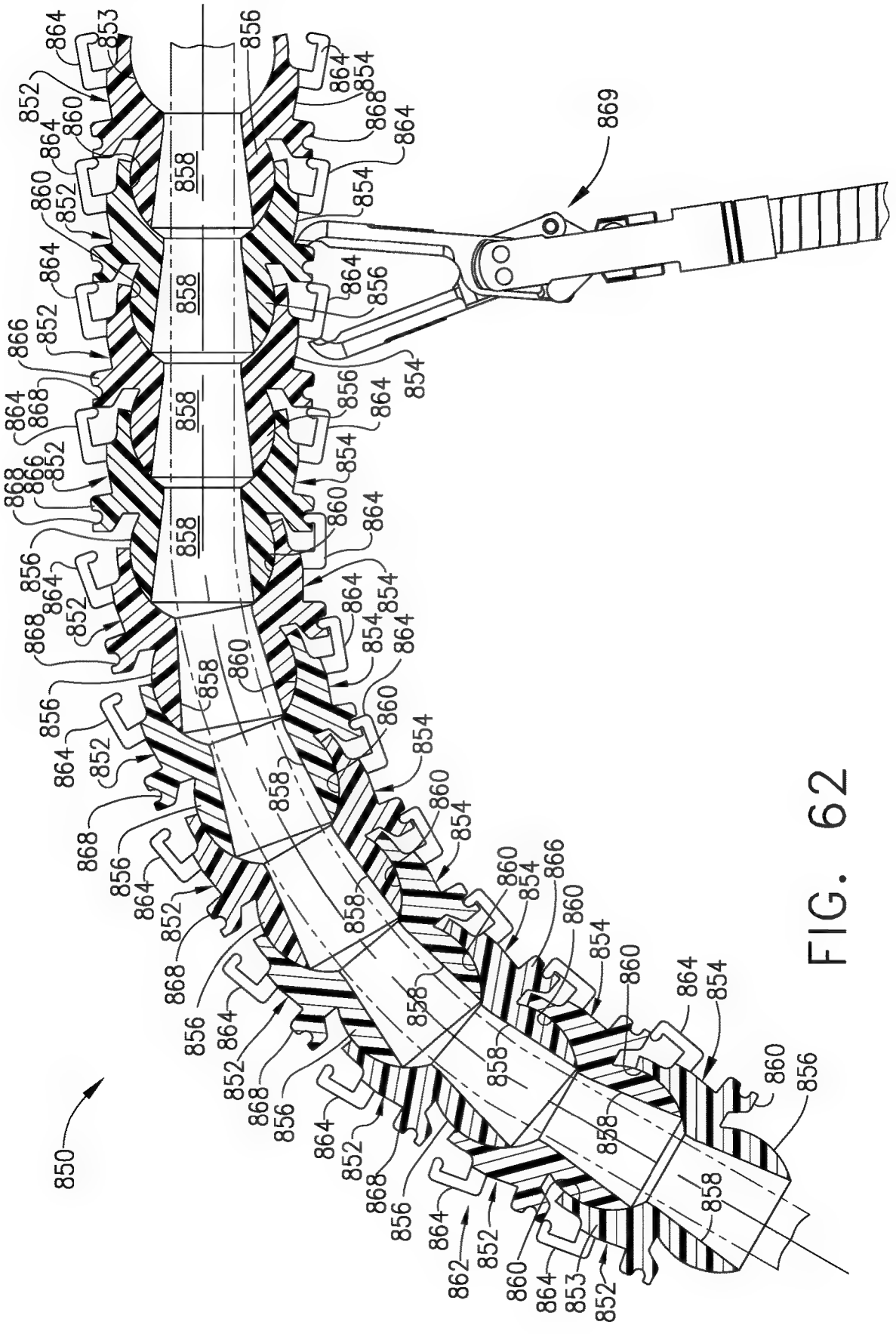

FIG. 62

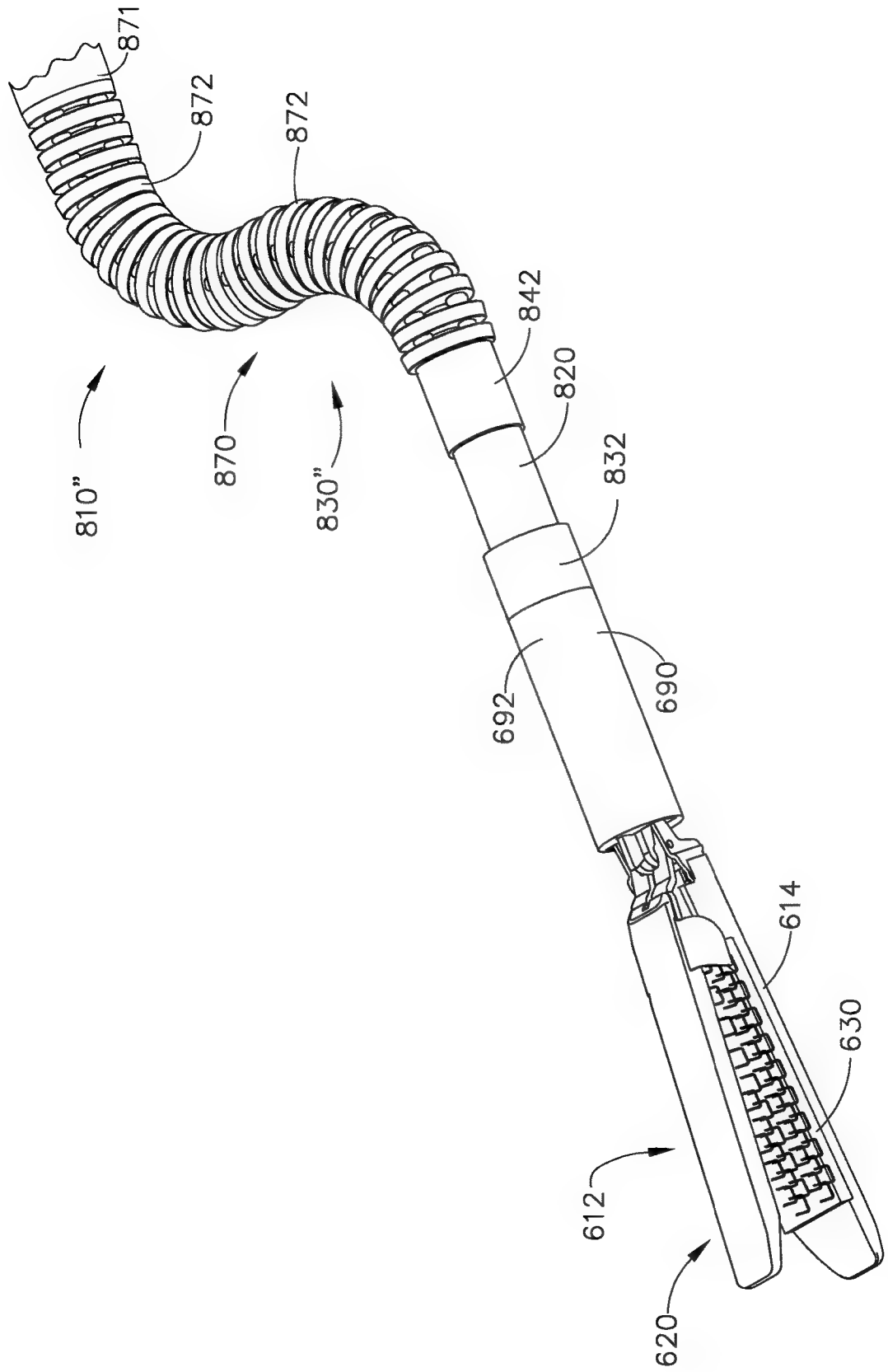

FIG. 63

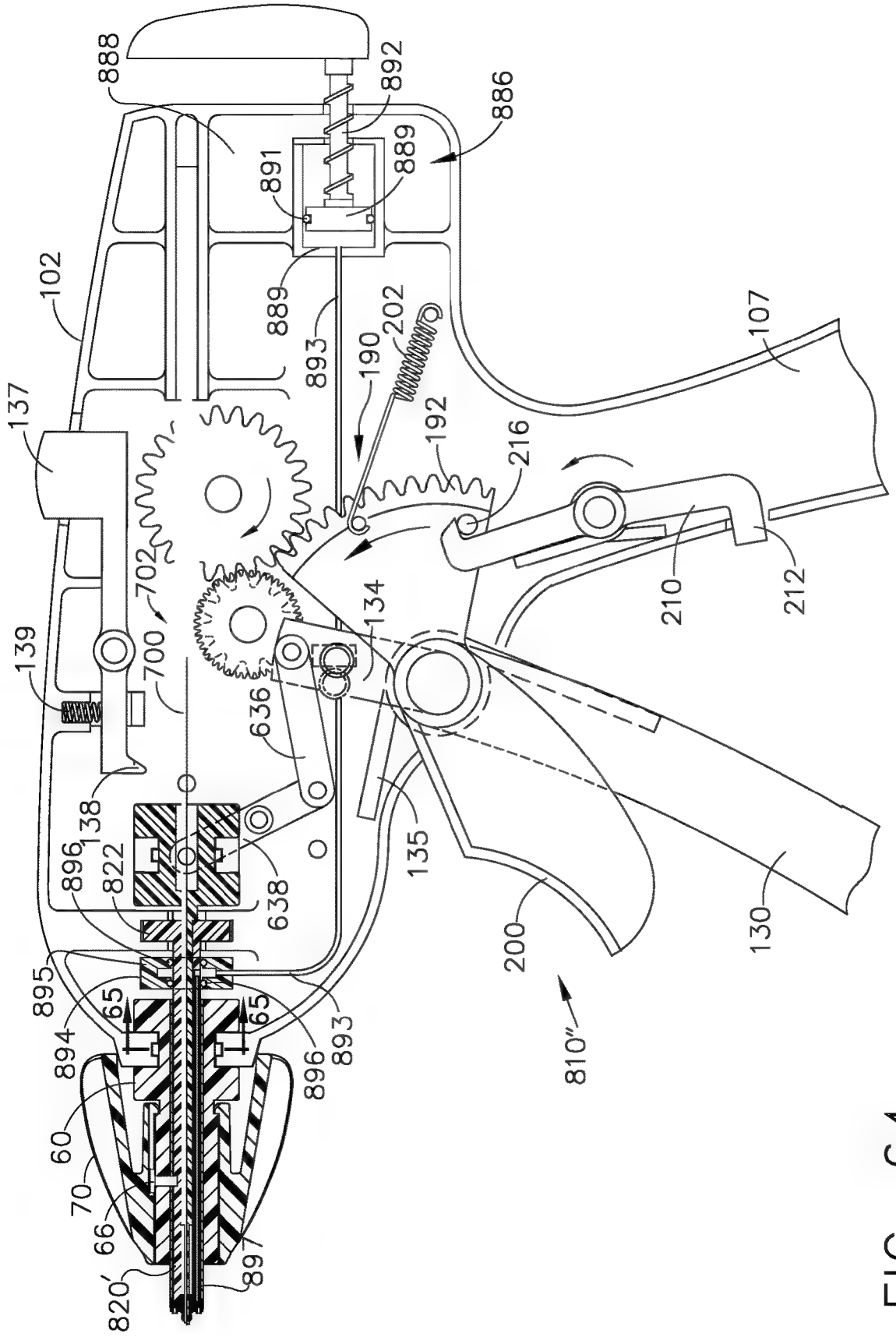
888
892
886
891
889
889
102
893
202
190
107
137
192
216
702
134
210
212
139
700
636
138
135
896
822
638
130
200
895
65
65
894
893
896
810"
60
70
66
897
820'

FIG. 64

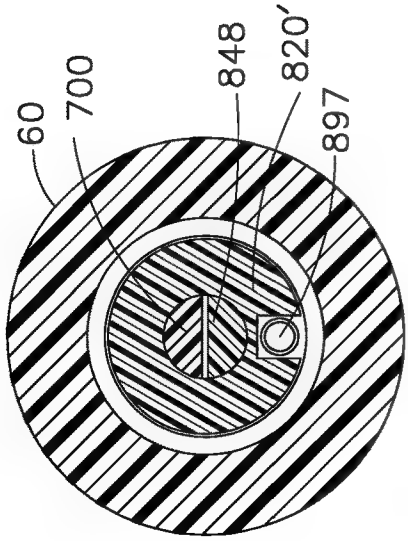
60
700
848
820'
897

FIG. 65

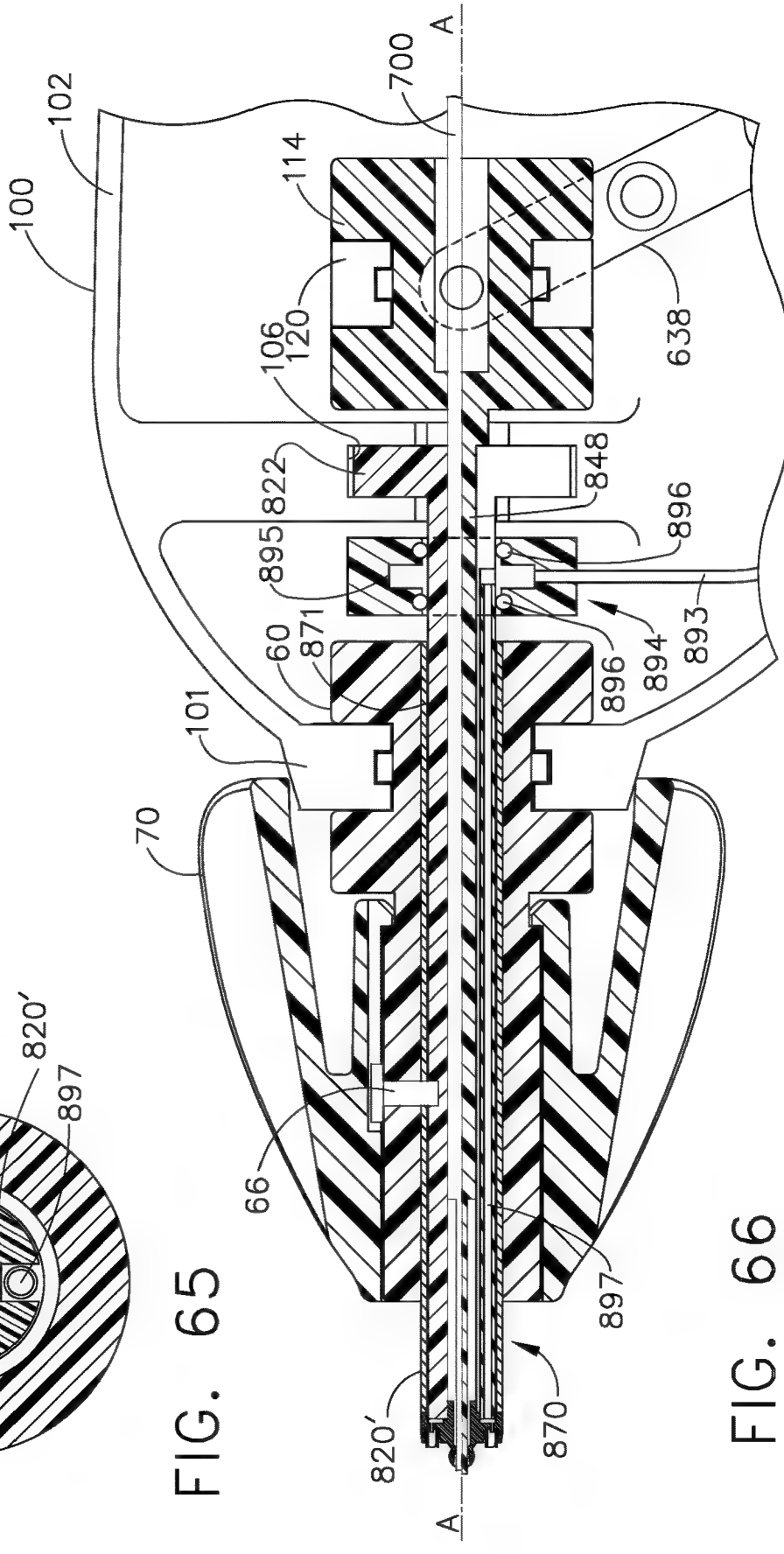
A
700
102
100
114
106
120
638
848
822
896
895
871
60
894
893
101
70
66
897
820'
870
A

FIG. 66

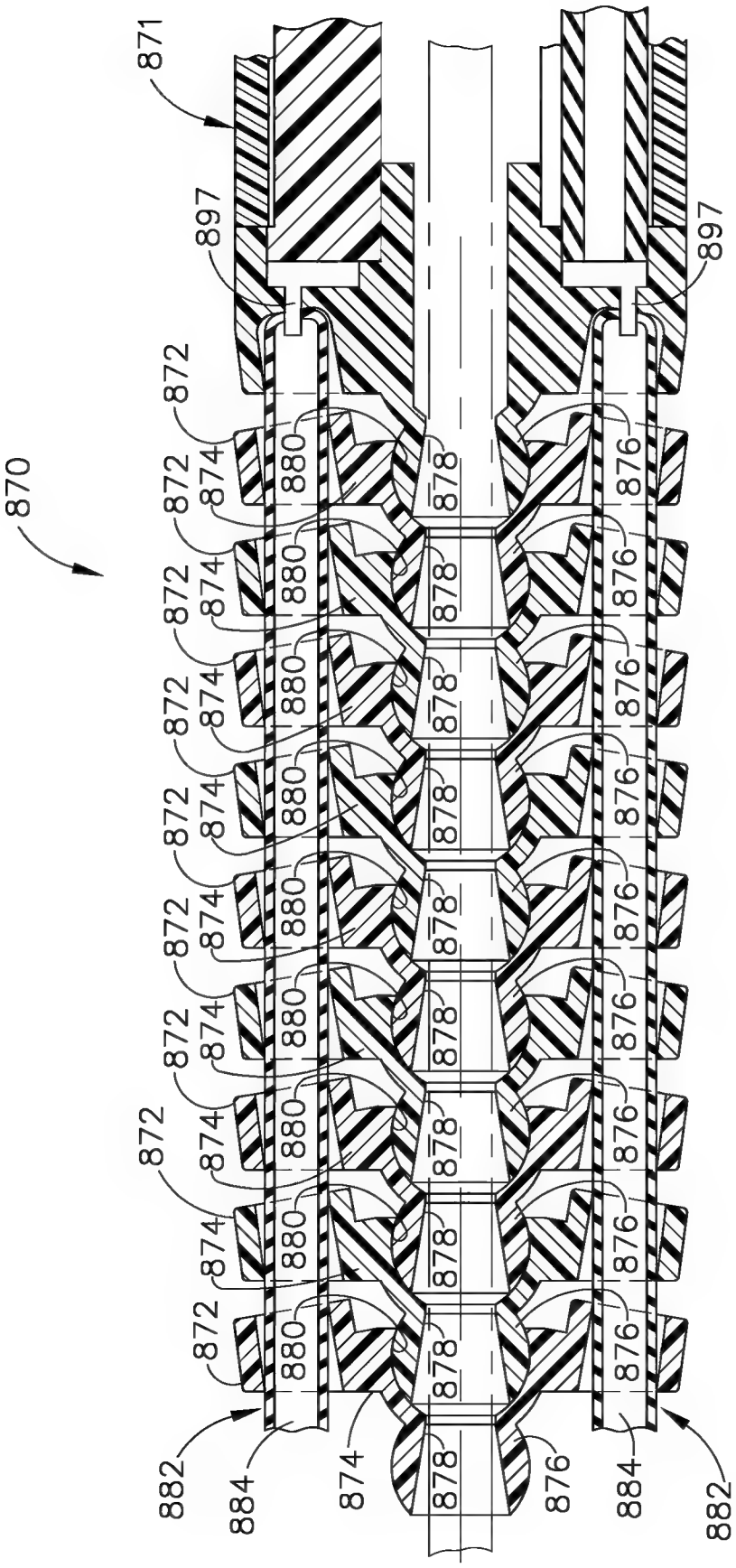

FIG. 67

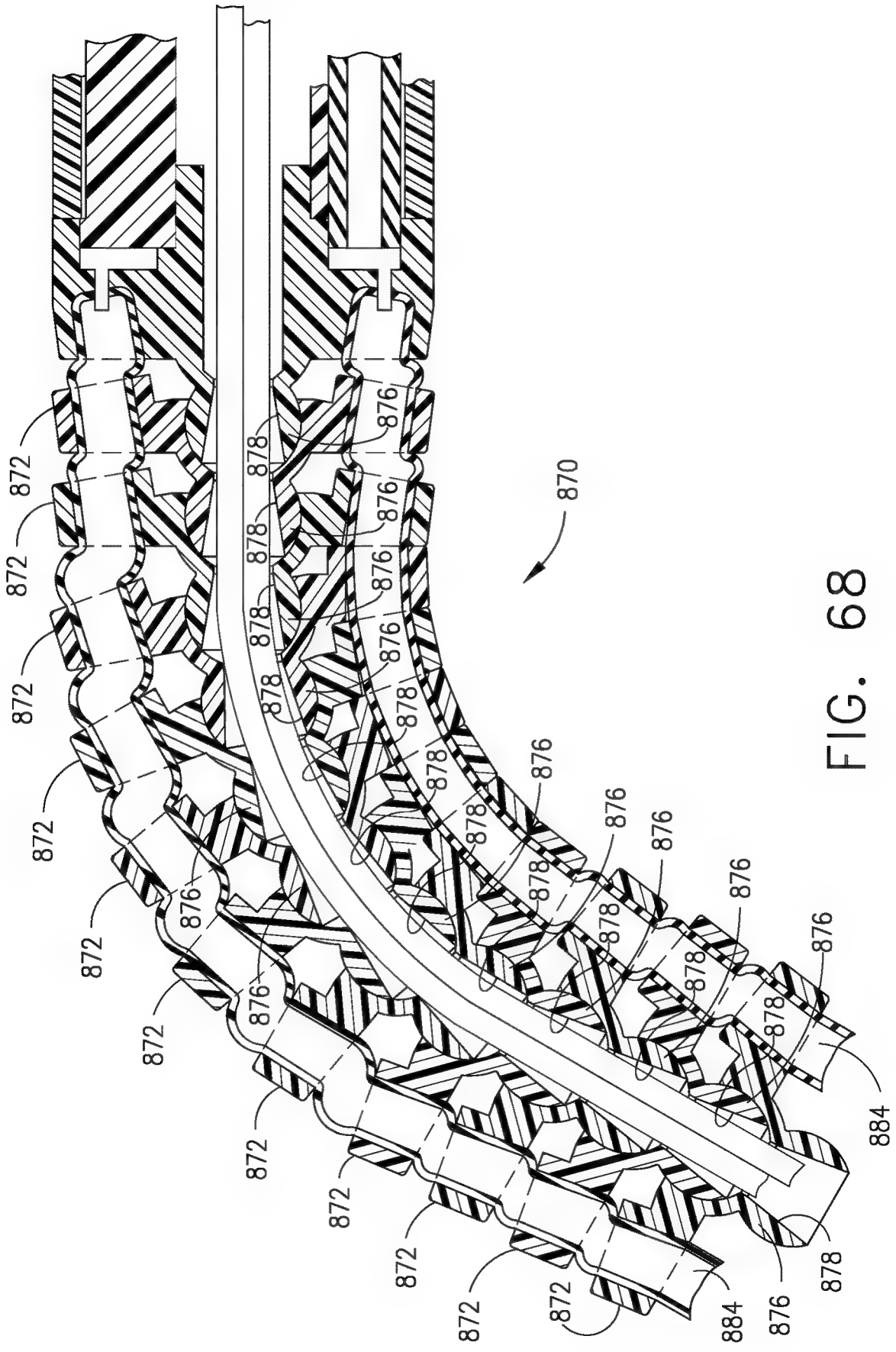

FIG. 68

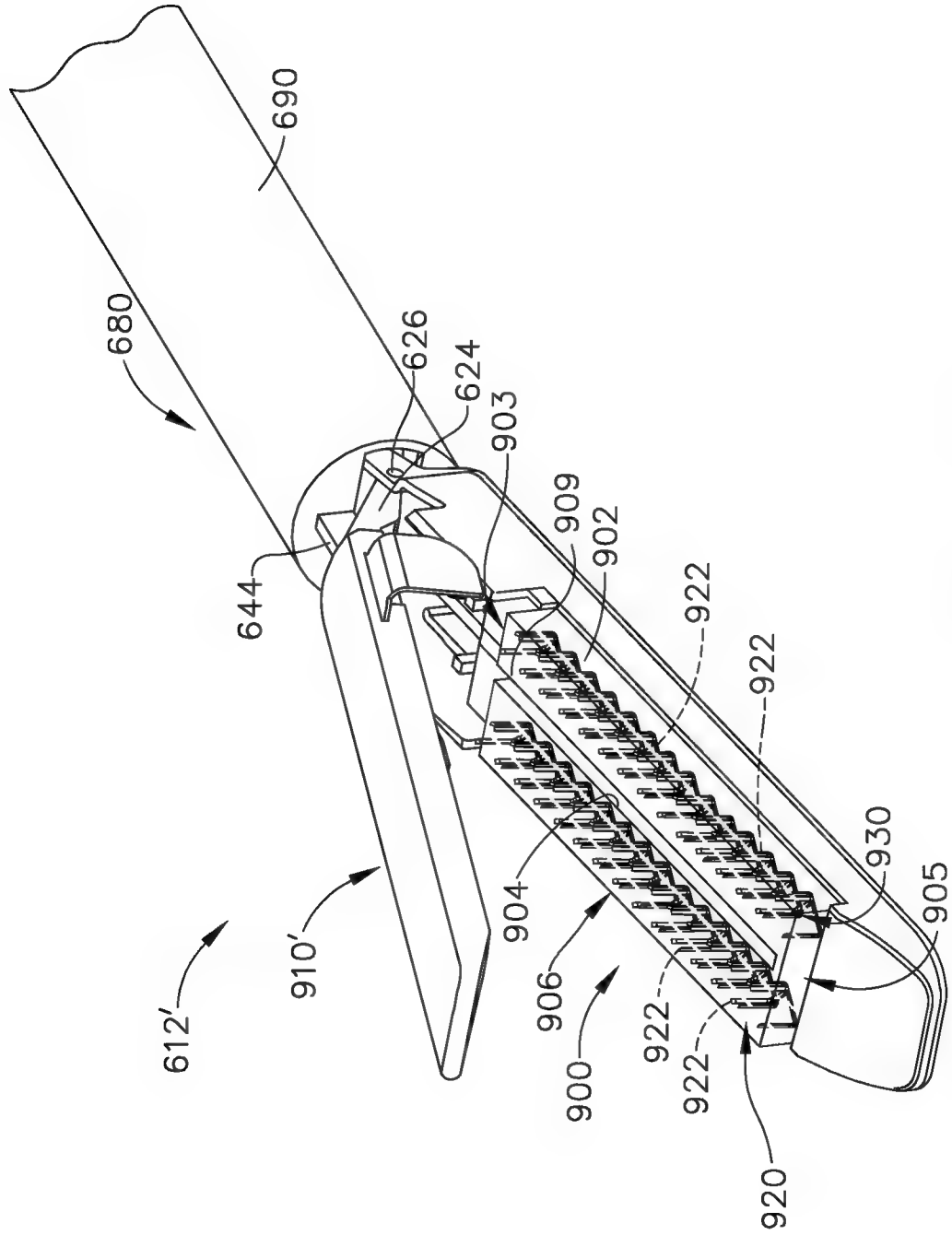
690
680
626
624
903
909
902
644
922
922
930
905
904
906
910'
612'
900
922
922
920

FIG. 69

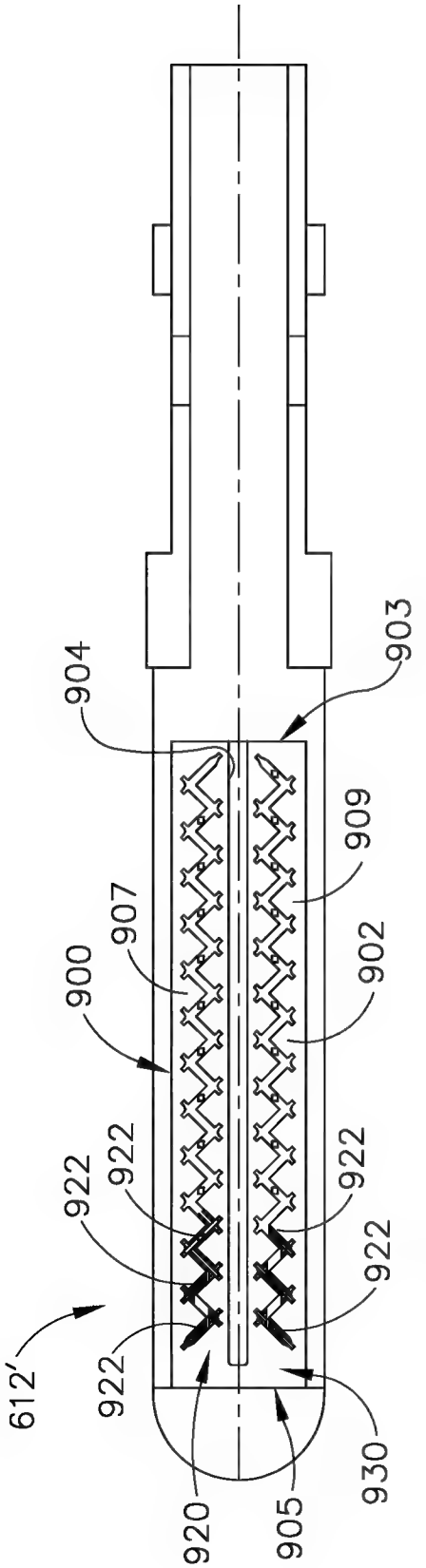
904
903
909
907
900
902
922
922
922
922
922
612'
920
905
930

FIG. 70

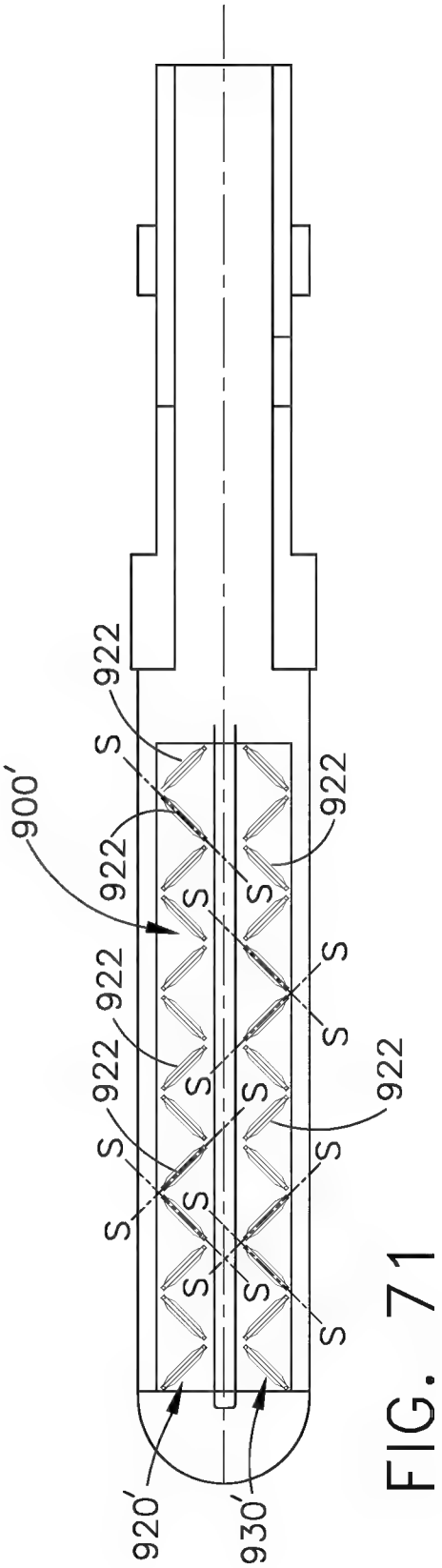
922
900'
922
922
922
922
922
920'
930'

FIG. 71

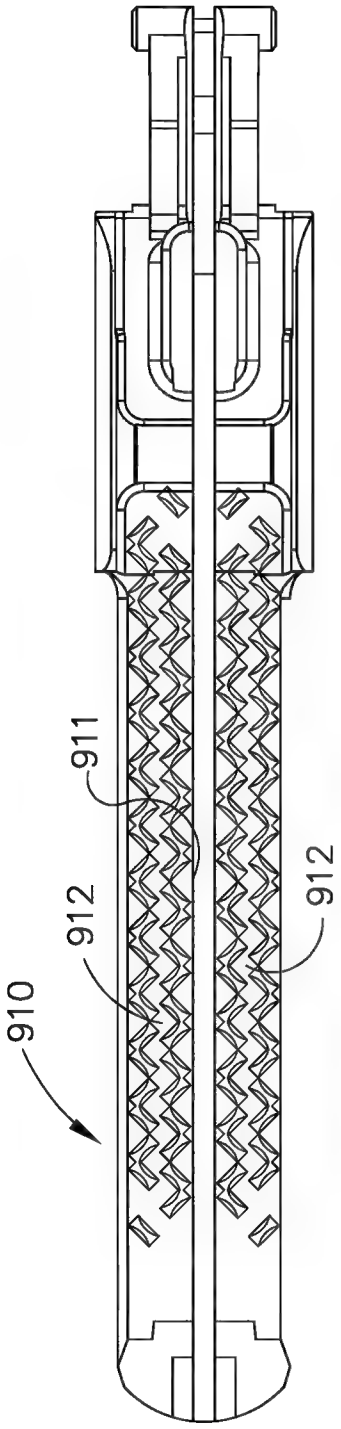

FIG. 72

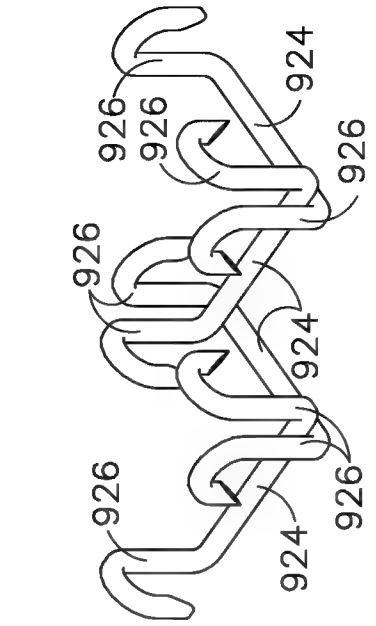

FIG. 74

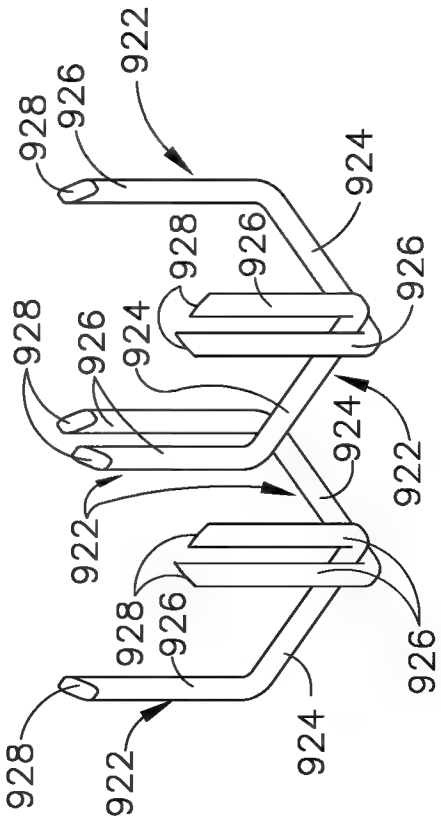

FIG. 73

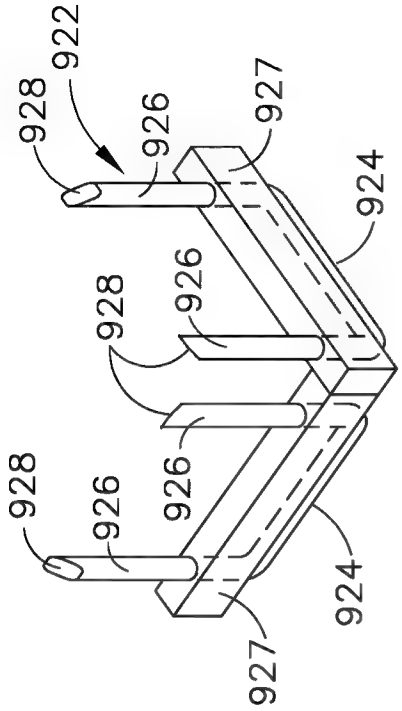

FIG. 76

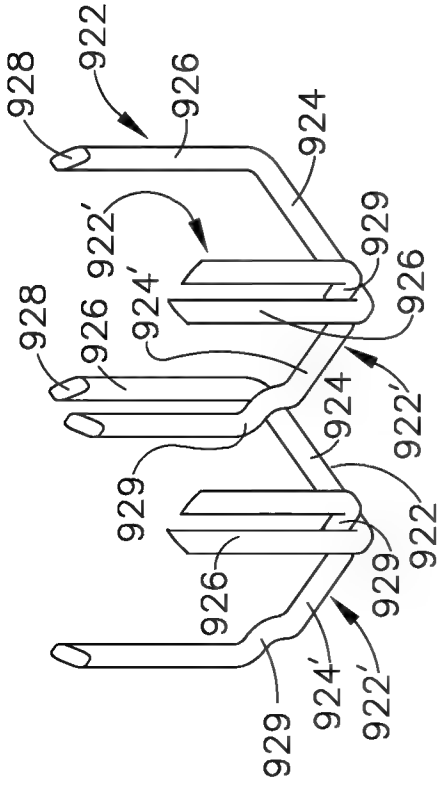

FIG. 75

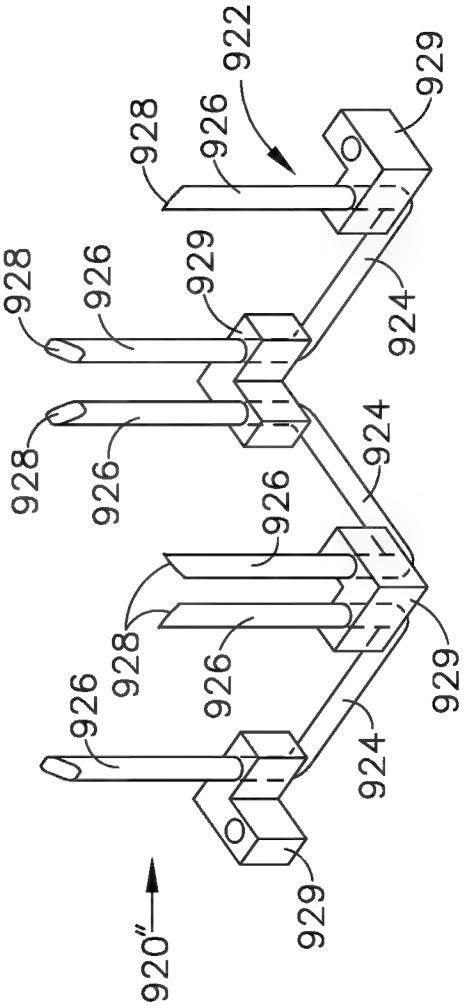

FIG. 77

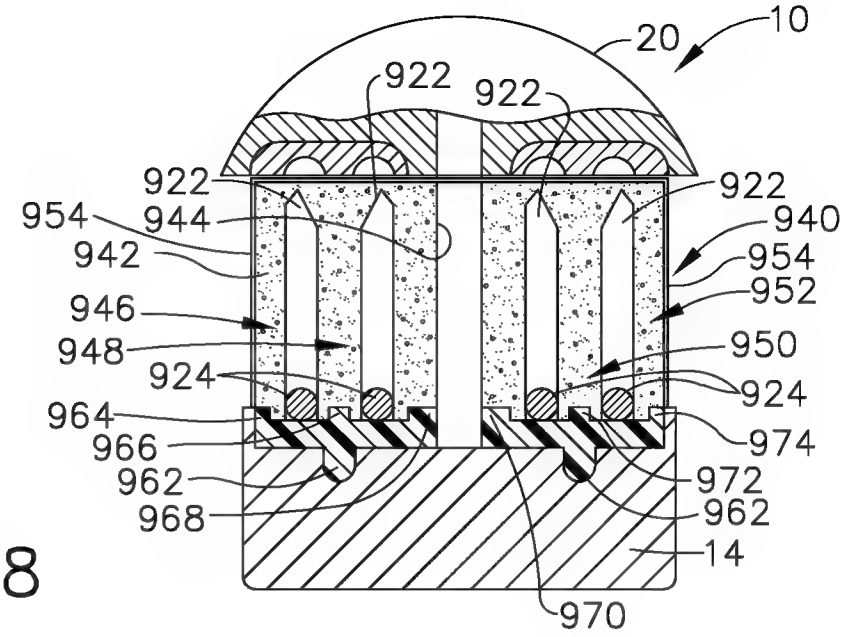

FIG. 78

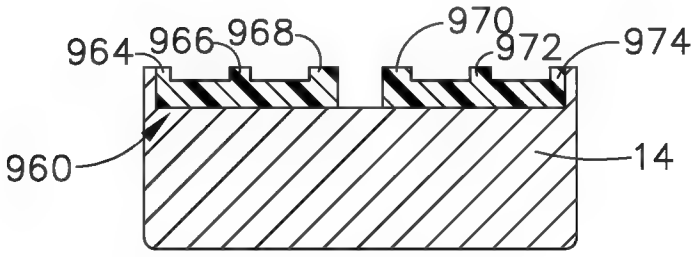

FIG. 79

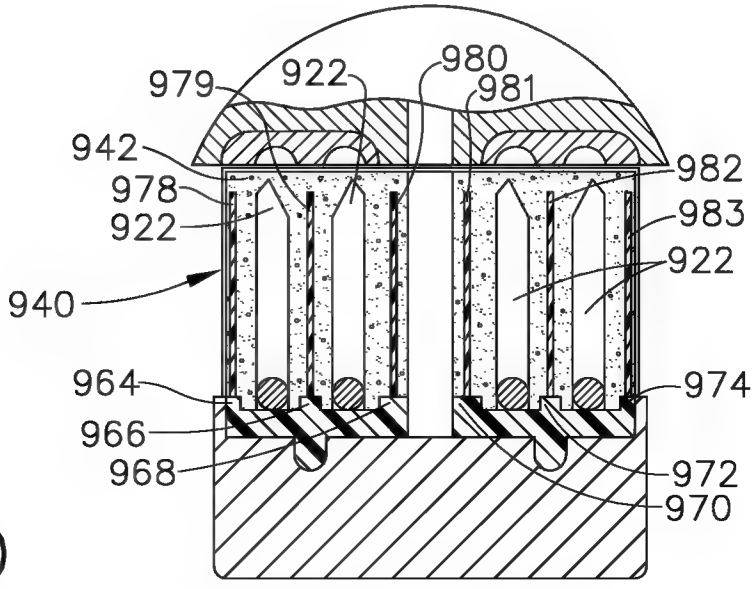

FIG. 80

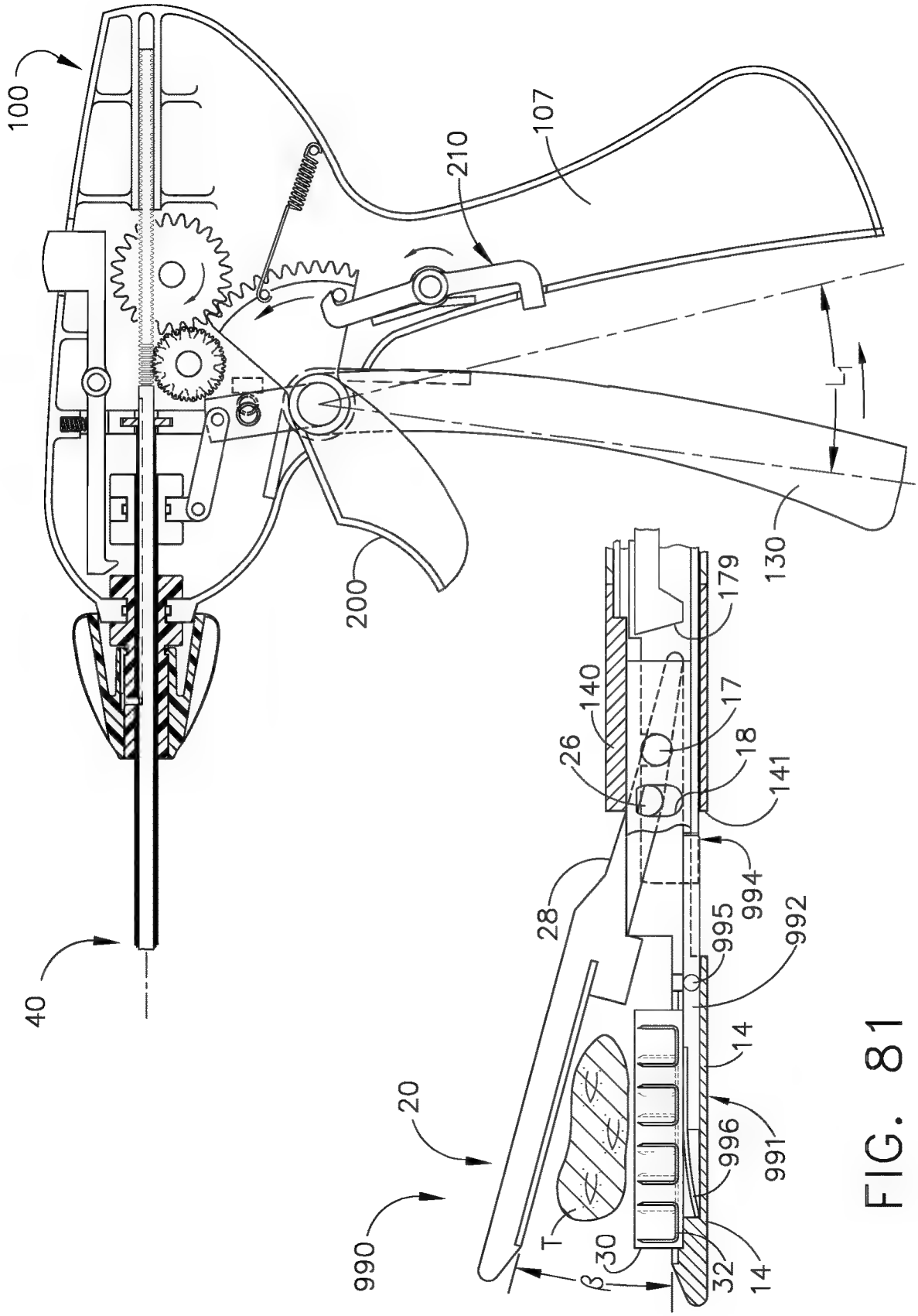
100
210
107
L_1
130
200
179
140
17
26
18
141
28
994
995
992
14
996
991
20
990
T
30
β
32
14
40

FIG. 81

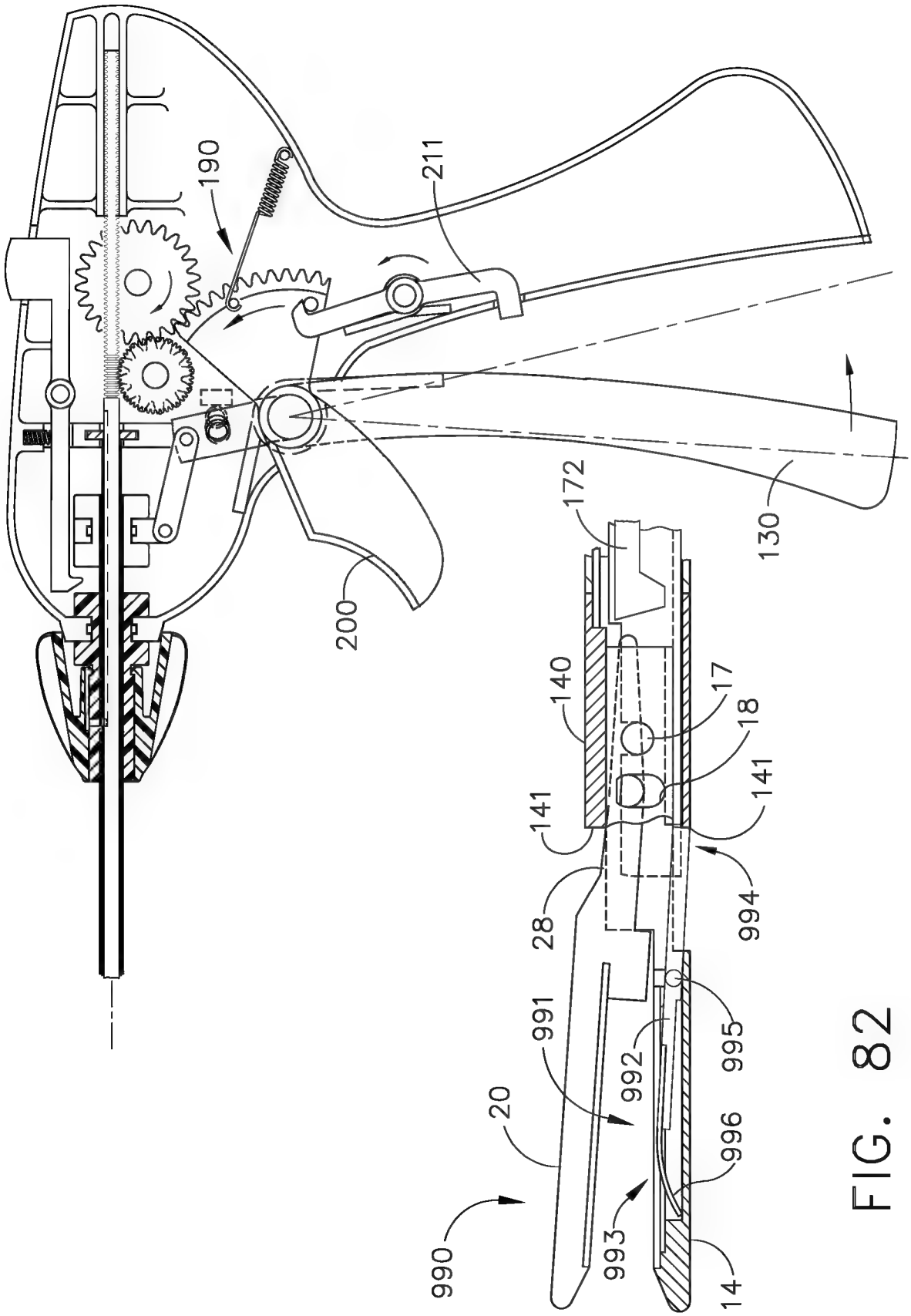
190
211
200
130
172
140
17
18
141
141
28
994
991
995
992
20
996
990
993
14

FIG. 82

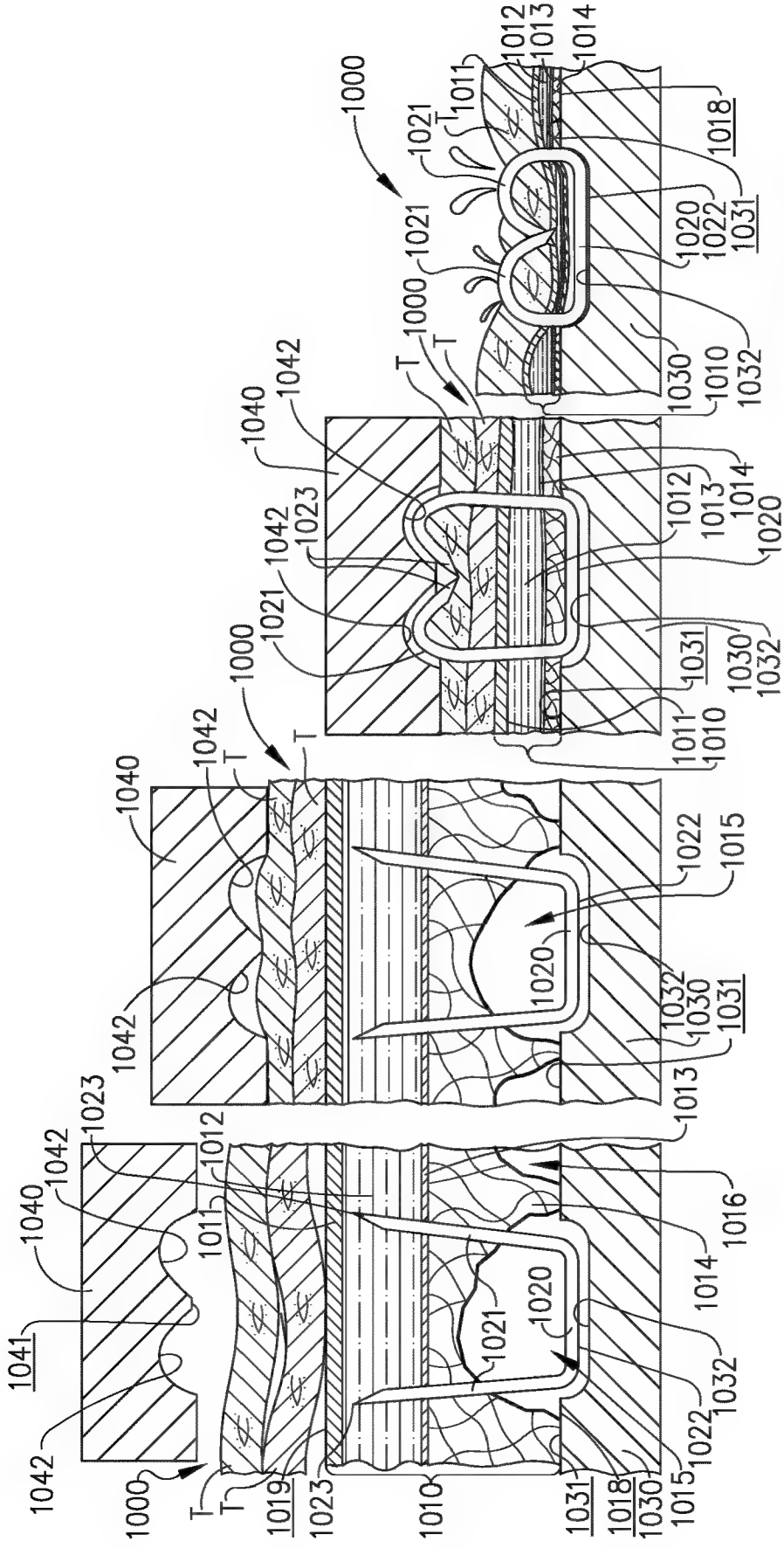

FIG. 83A FIG. 83B FIG. 83C FIG. 83D

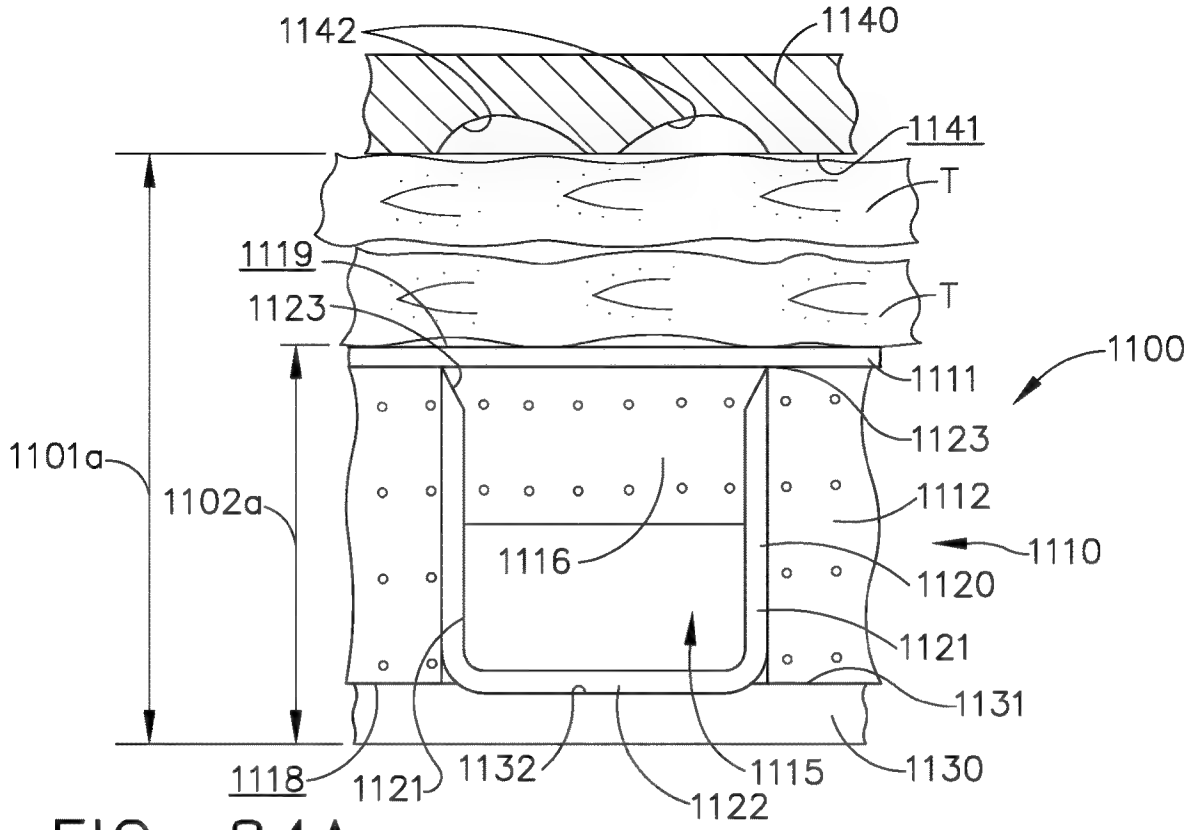

FIG. 84A

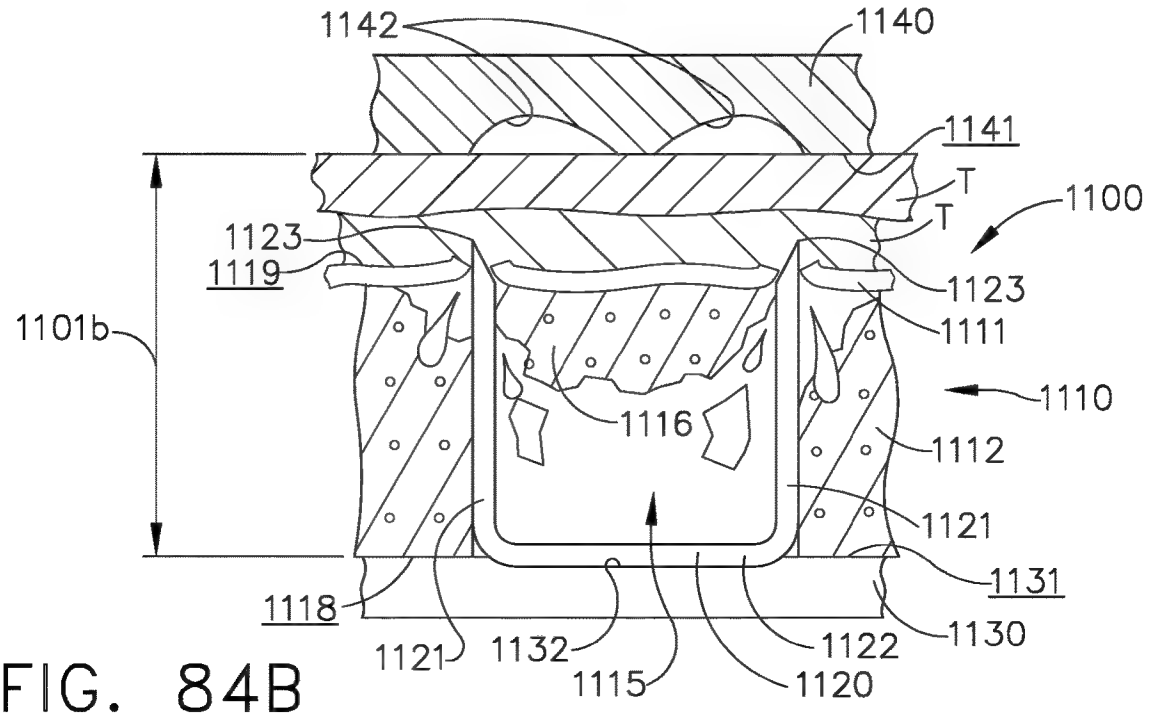

FIG. 84B

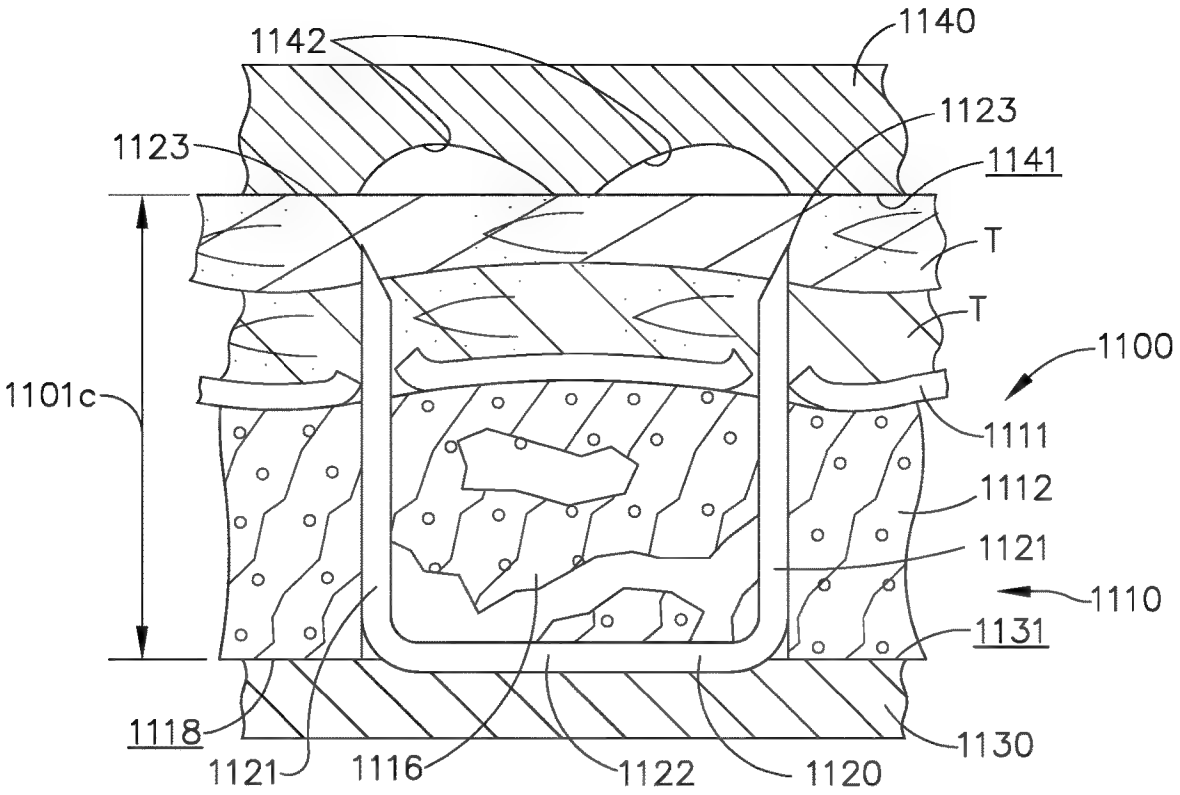

FIG. 84C

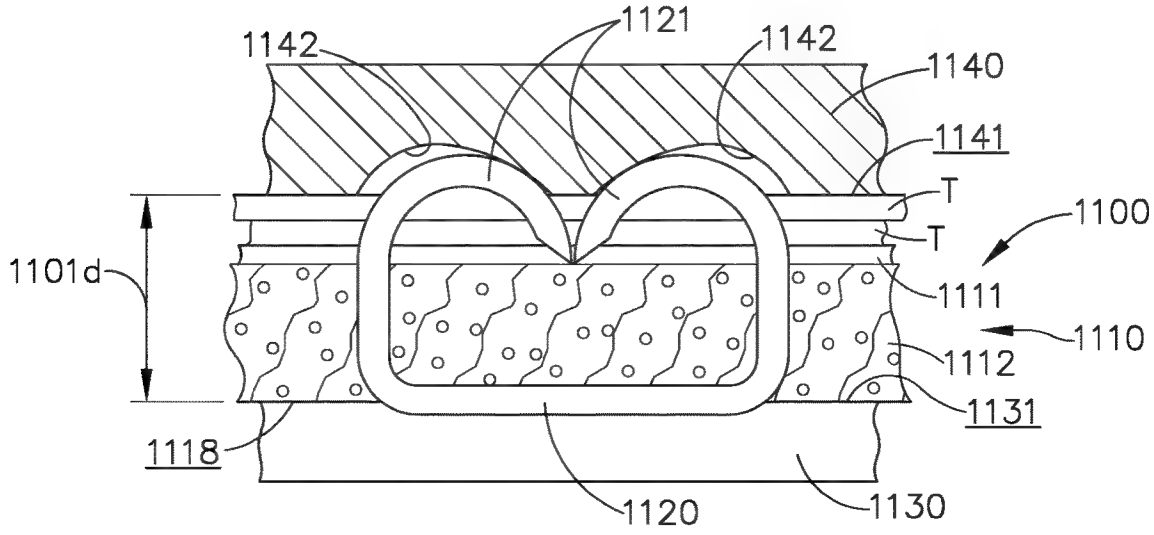

FIG. 84D

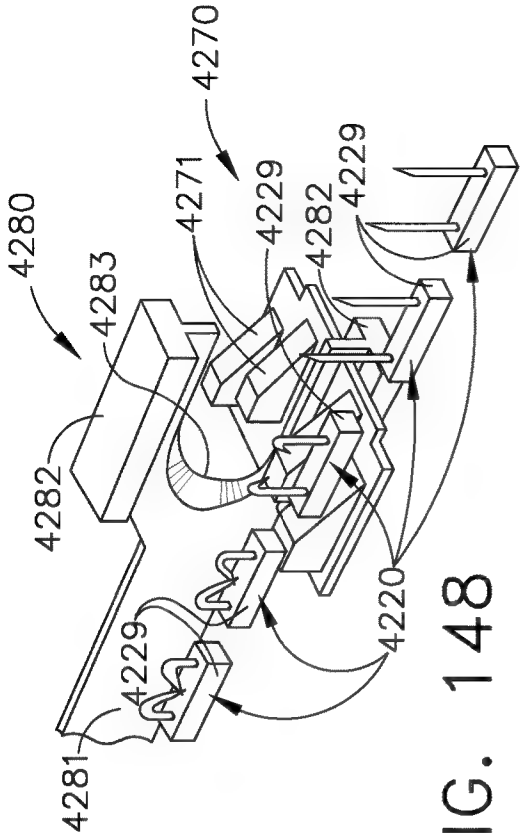

FIG. 148

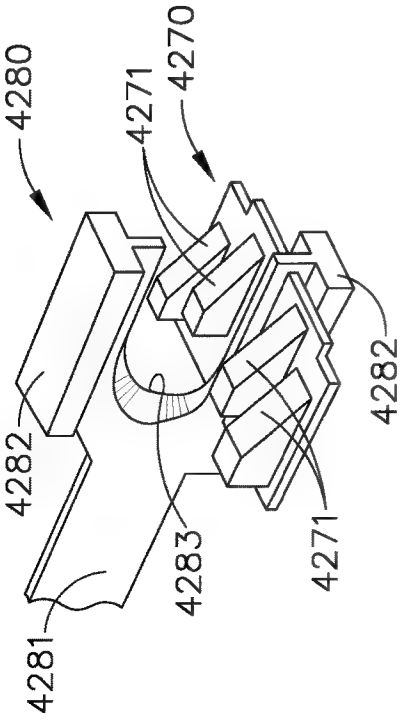

FIG. 147

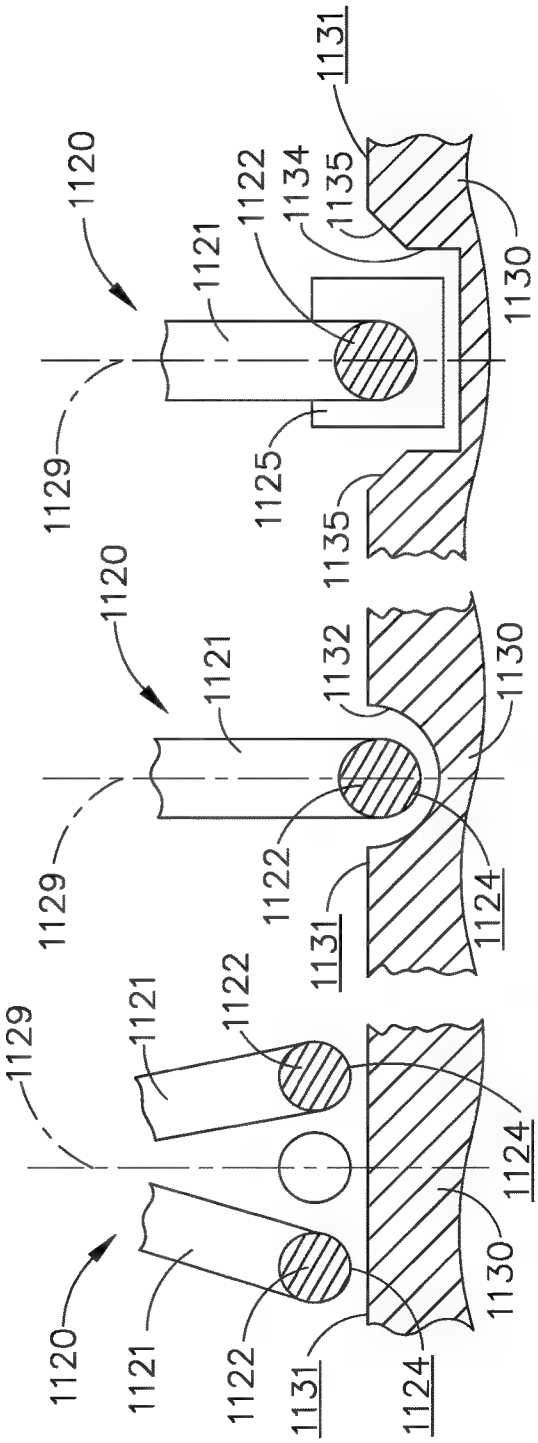

FIG. 86

FIG. 87

FIG. 85

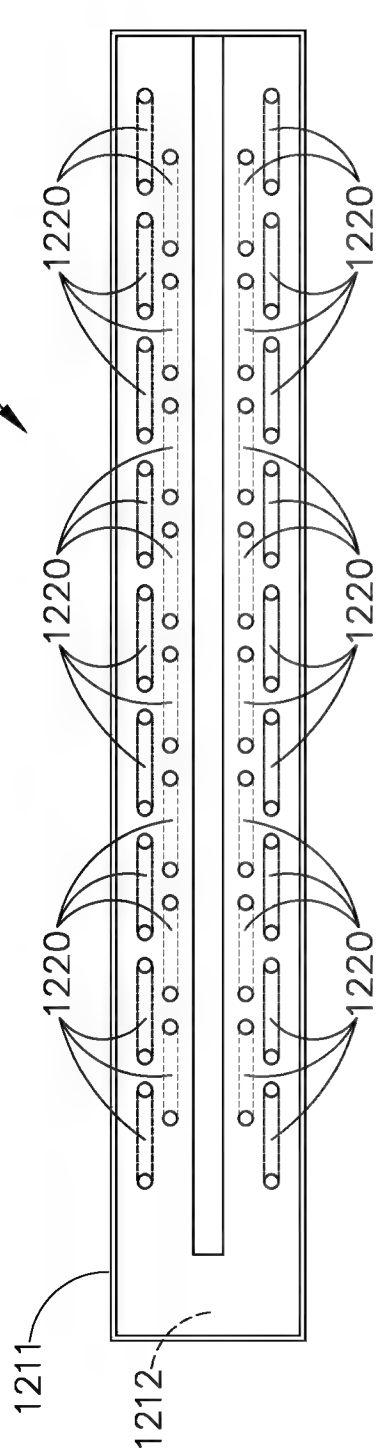
1200
1220
1220
1220
1220
1220
1220
1211
1212

FIG. 88

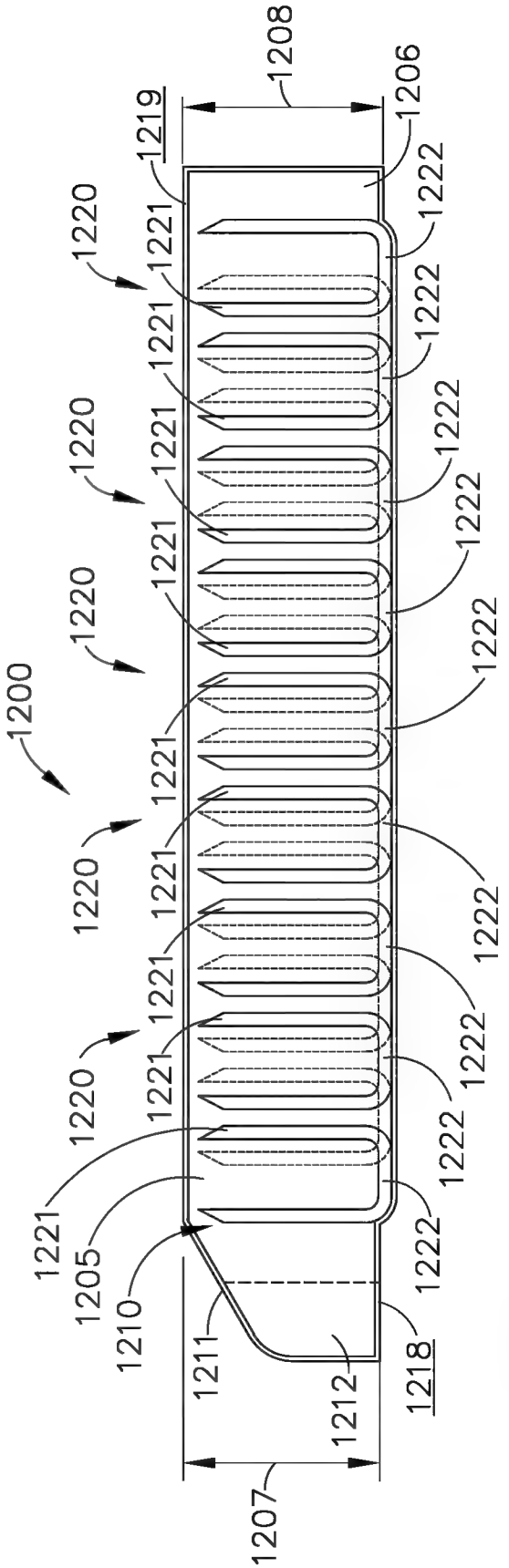
1200
1208
1206
1219
1220
1221
1222
1205
1210
1211
1212
1218
1207

FIG. 89

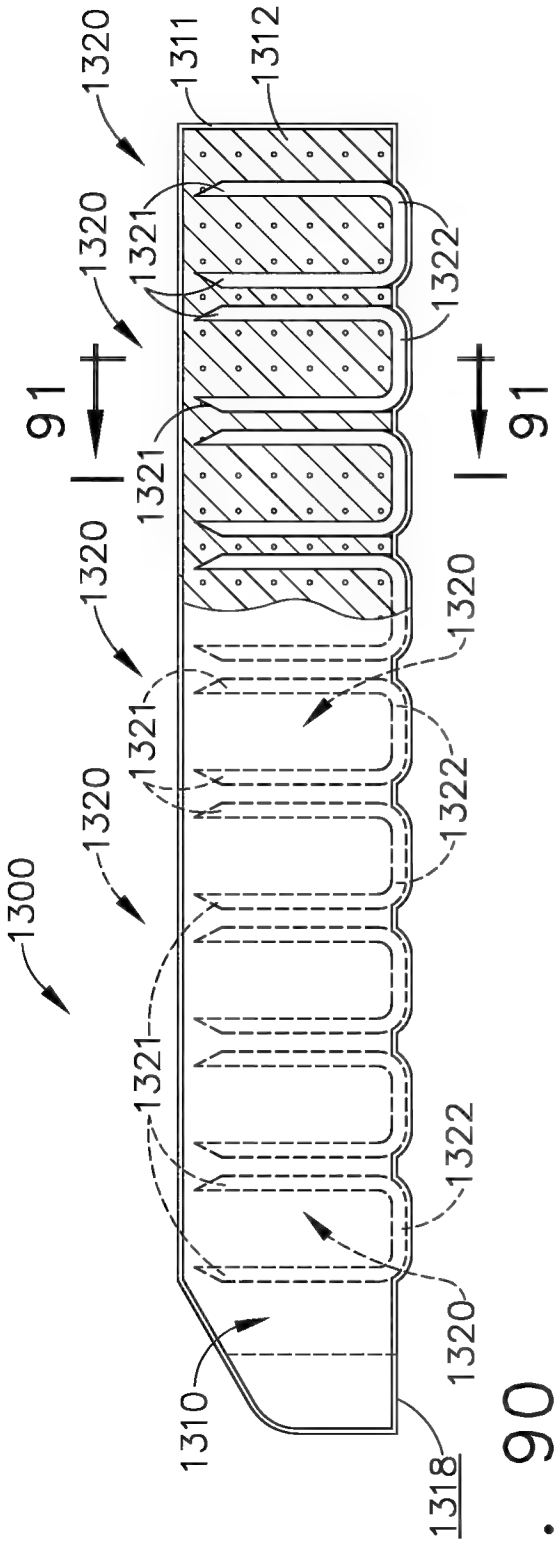
1300
1310
1311
1312
1318
1320
1321
1322
91
91

FIG. 90

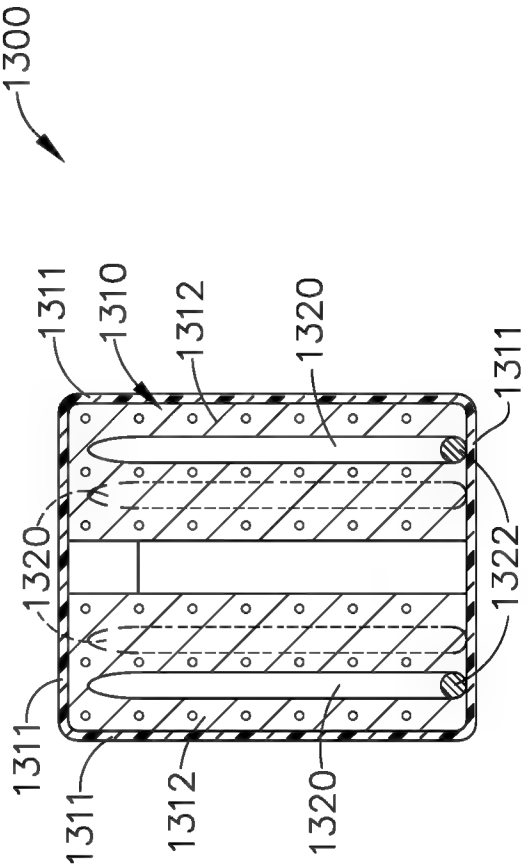
1300
1310
1311
1312
1320
1322

FIG. 91

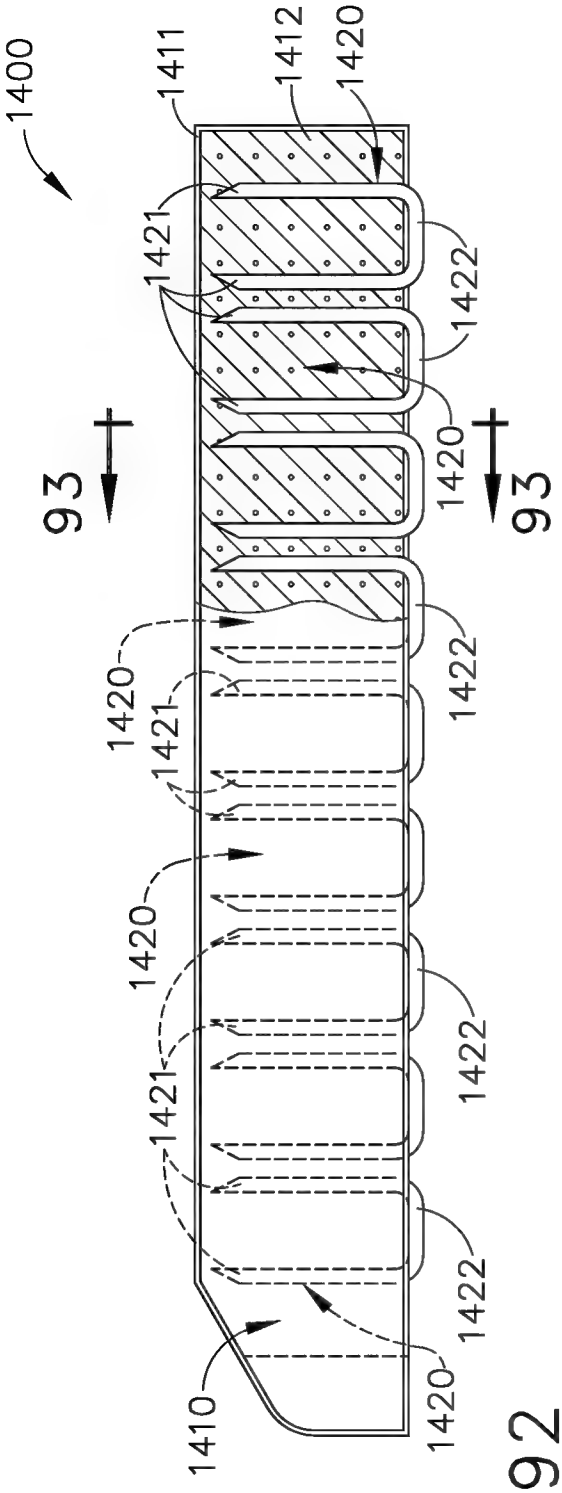
1400
1411
1412
1420
1421
1422
93
93
1420
1421
1422
1420
1421
1422
1420
1421
1422
1410
1420

FIG. 92

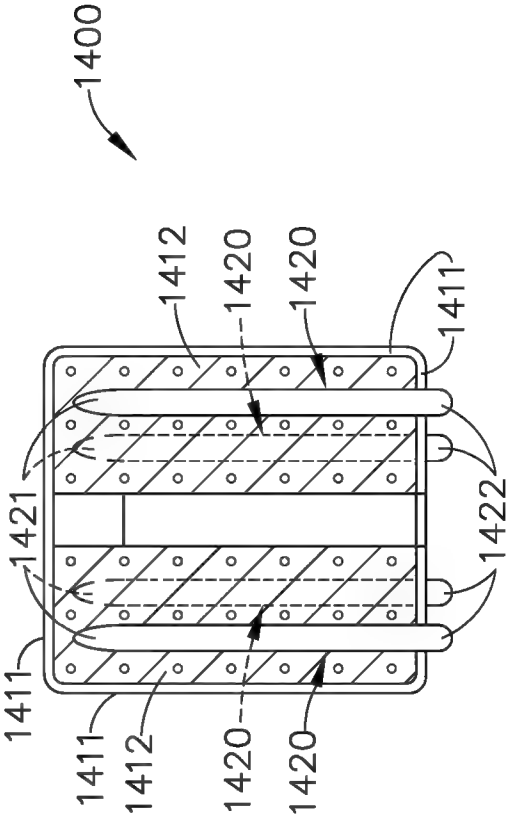
1400
1412
1420
1420
1411
1421
1422
1411
1412
1420
1420

FIG. 93

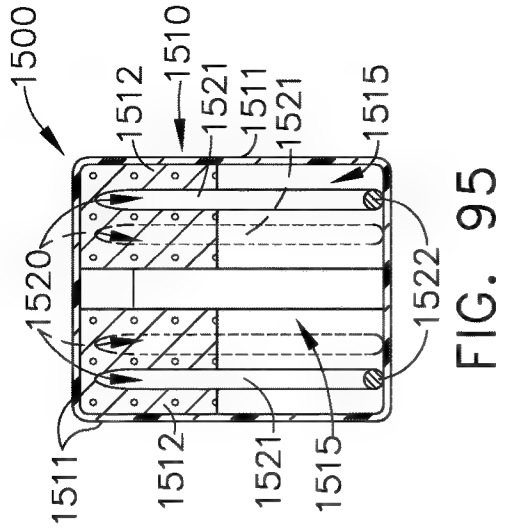

FIG. 95

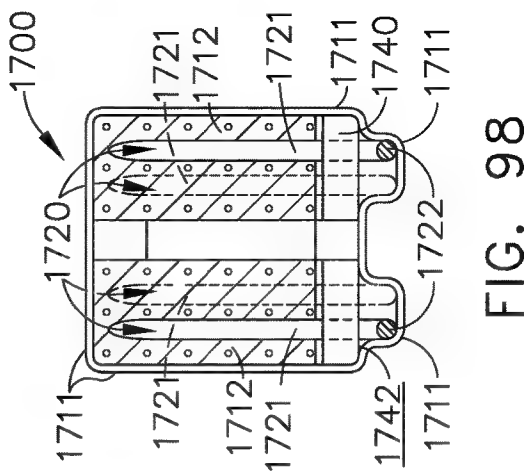

FIG. 98

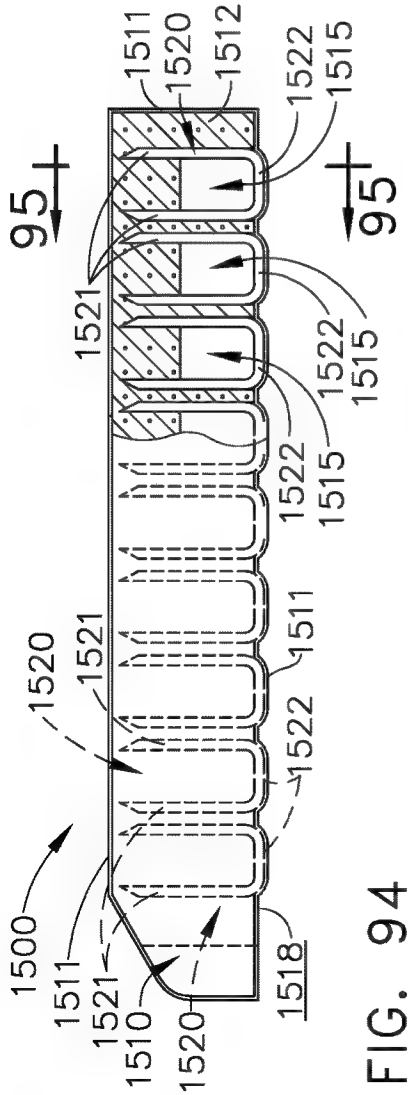

FIG. 94

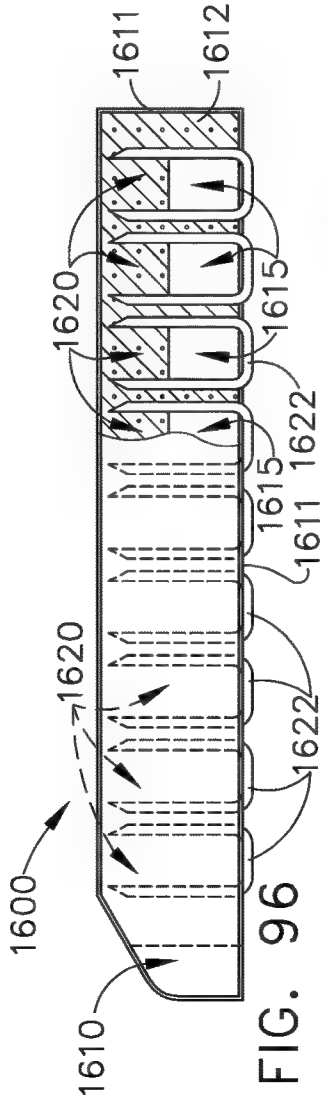

FIG. 96

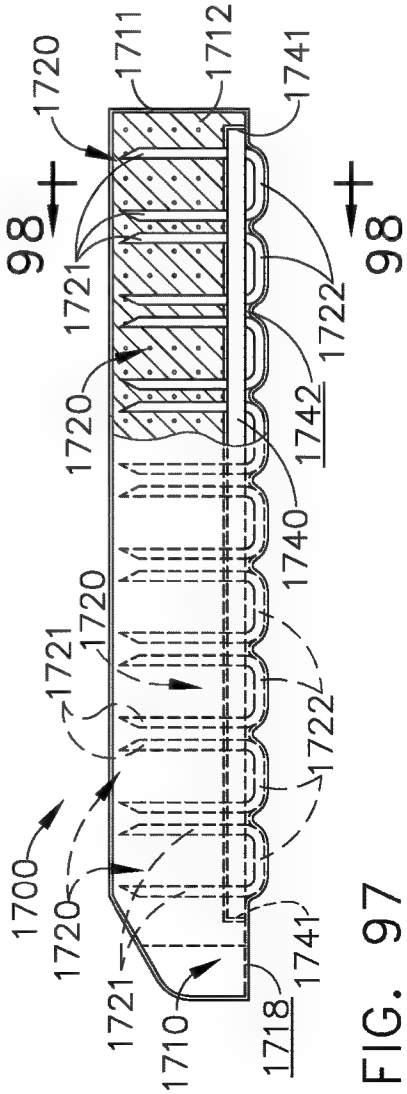

FIG. 97

FIG. 99

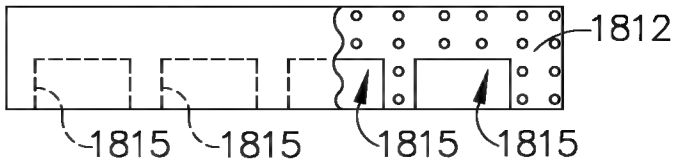

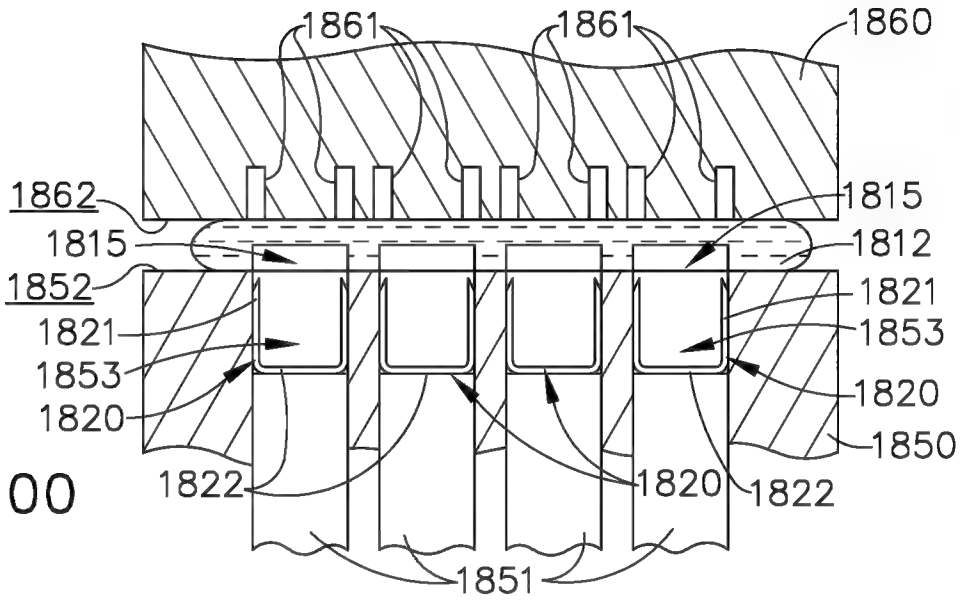

FIG. 100

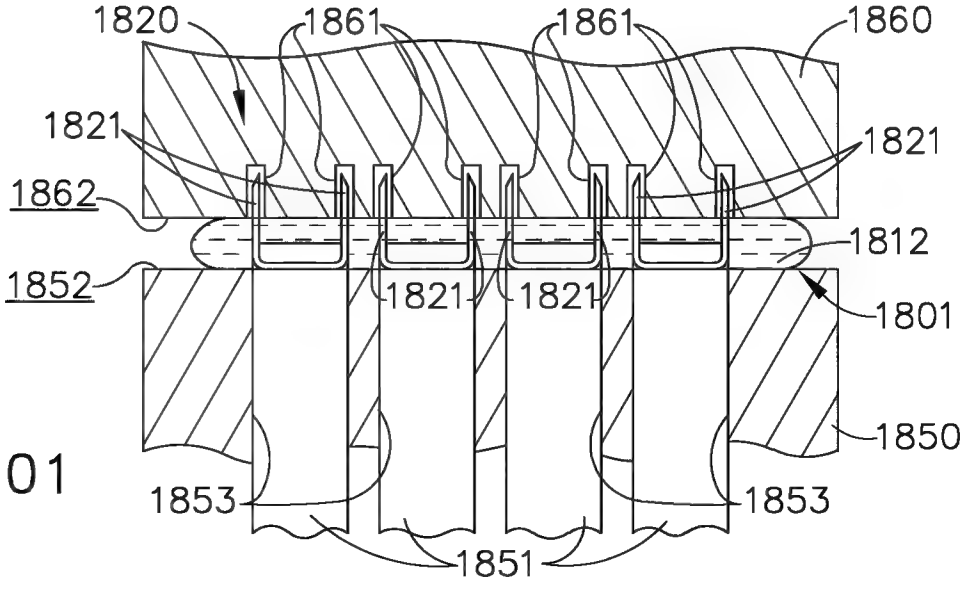

FIG. 101

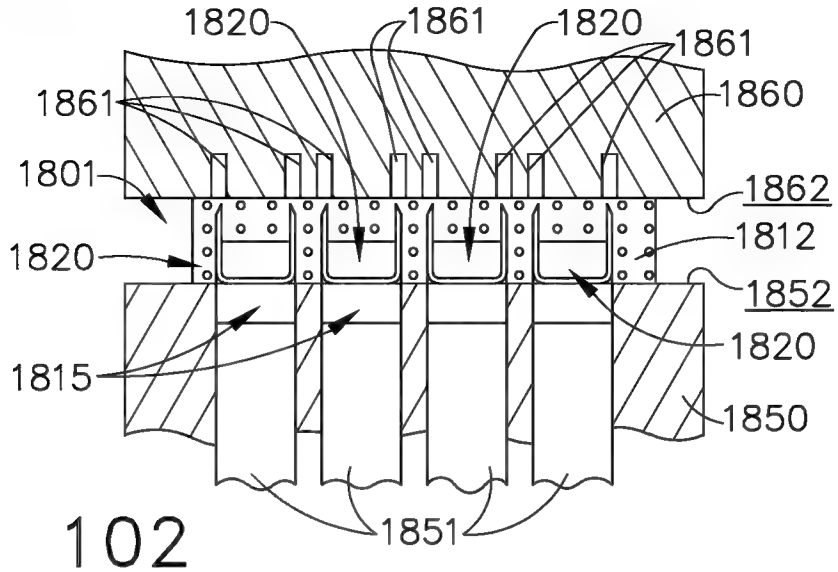

FIG. 102

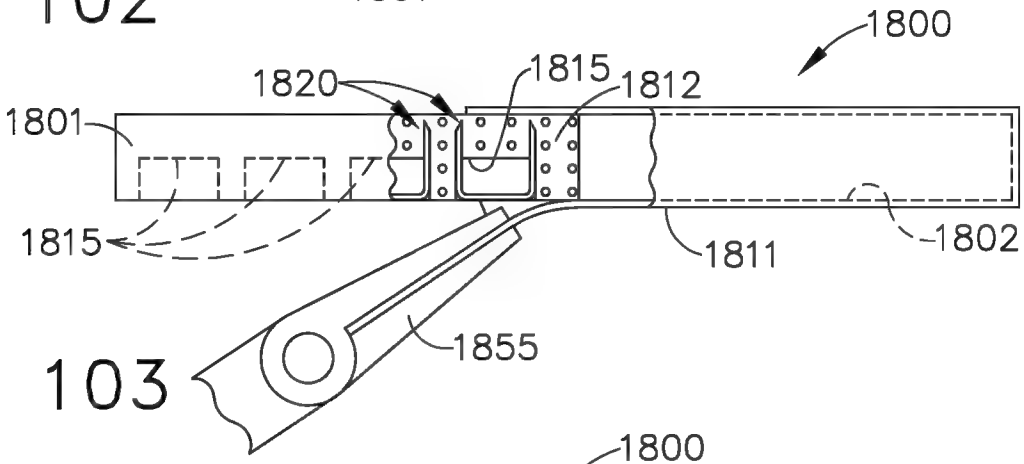

FIG. 103

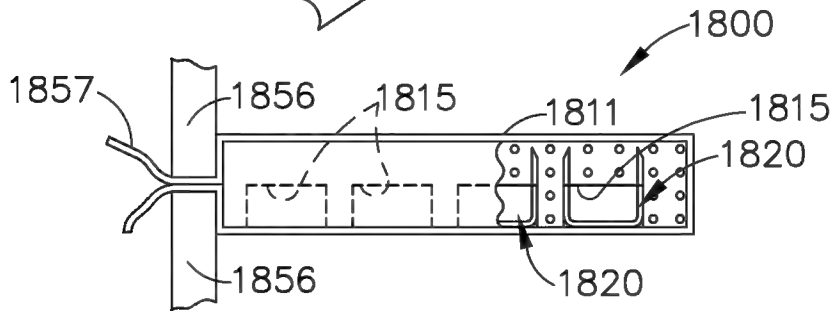

FIG. 104

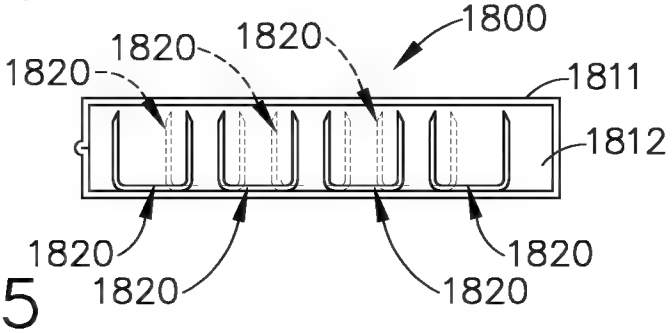

FIG. 105

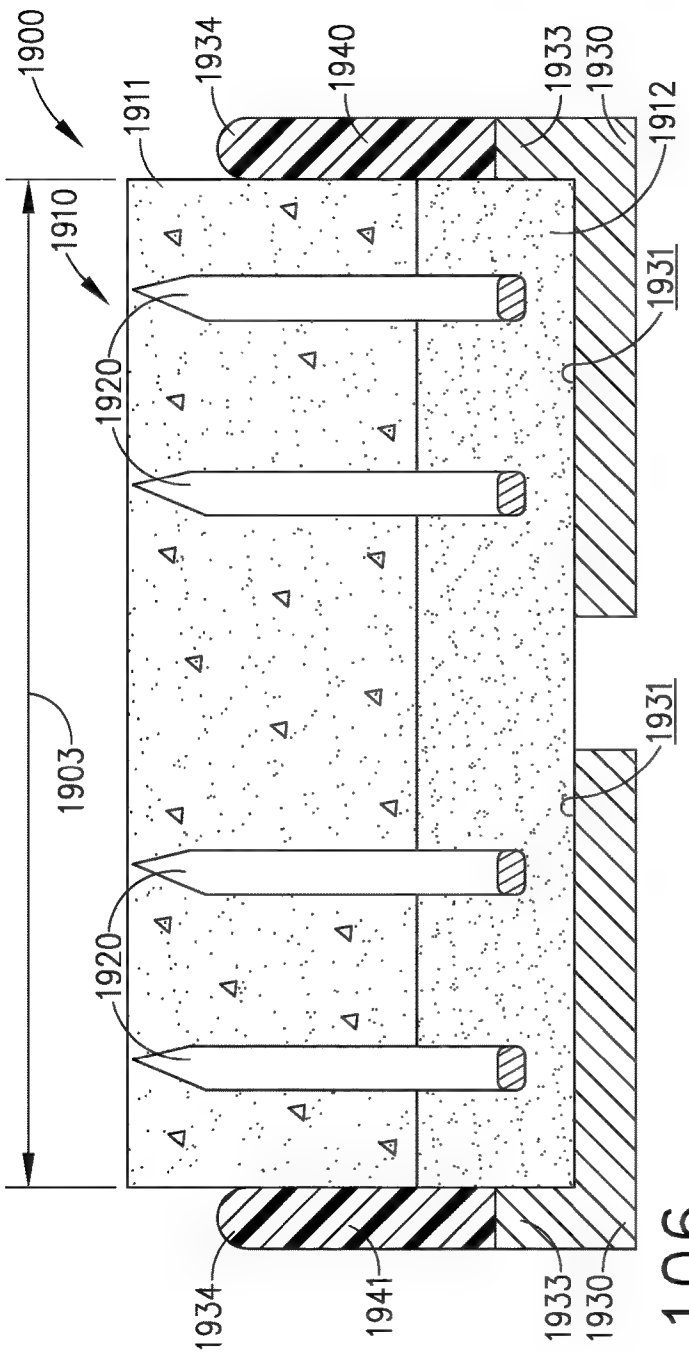

FIG. 106

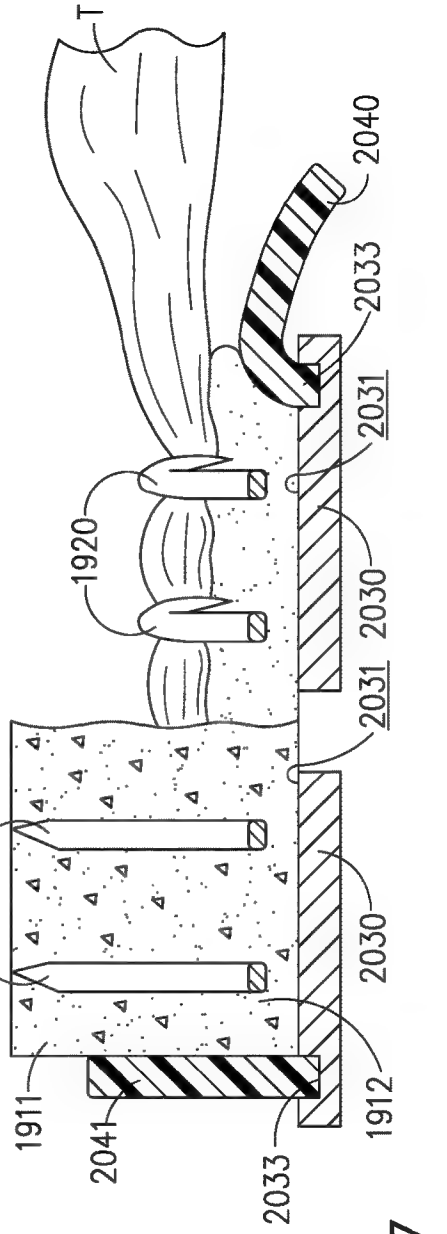

FIG. 107

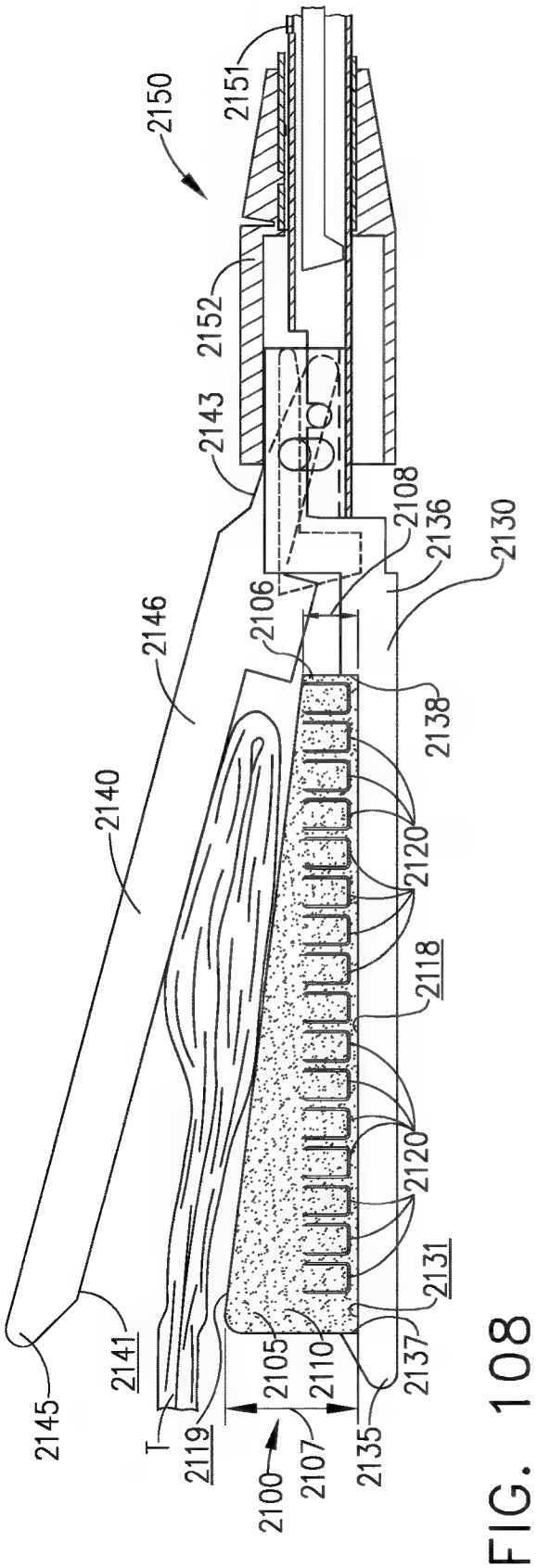

FIG. 108

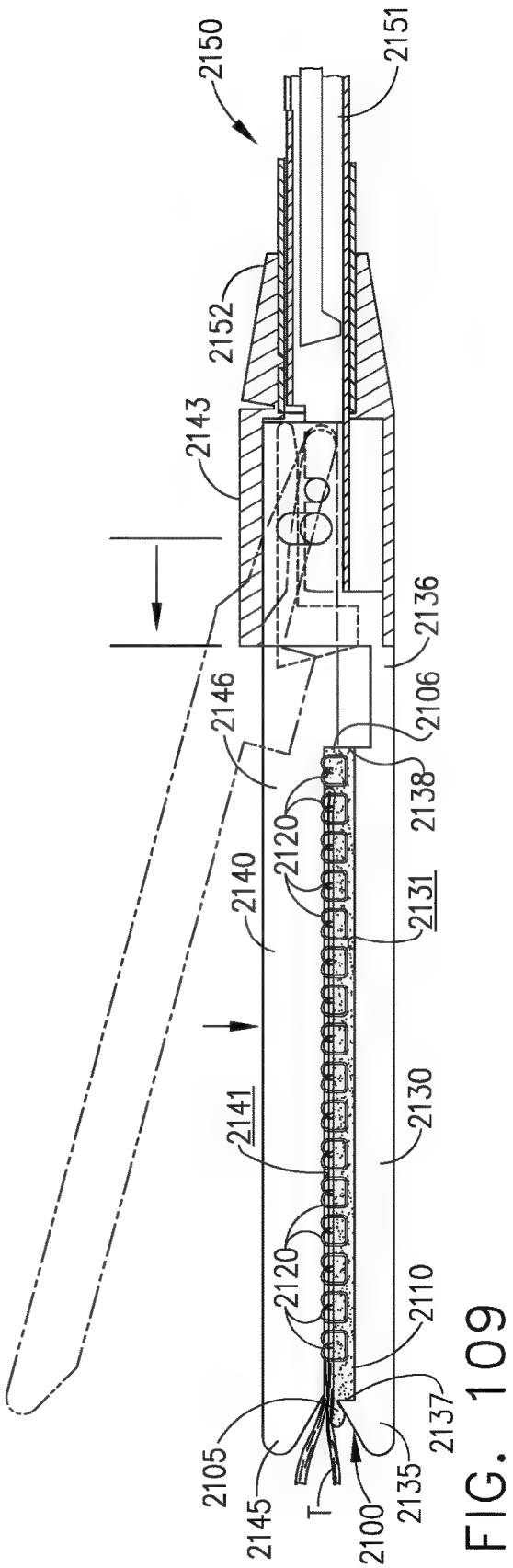

FIG. 109

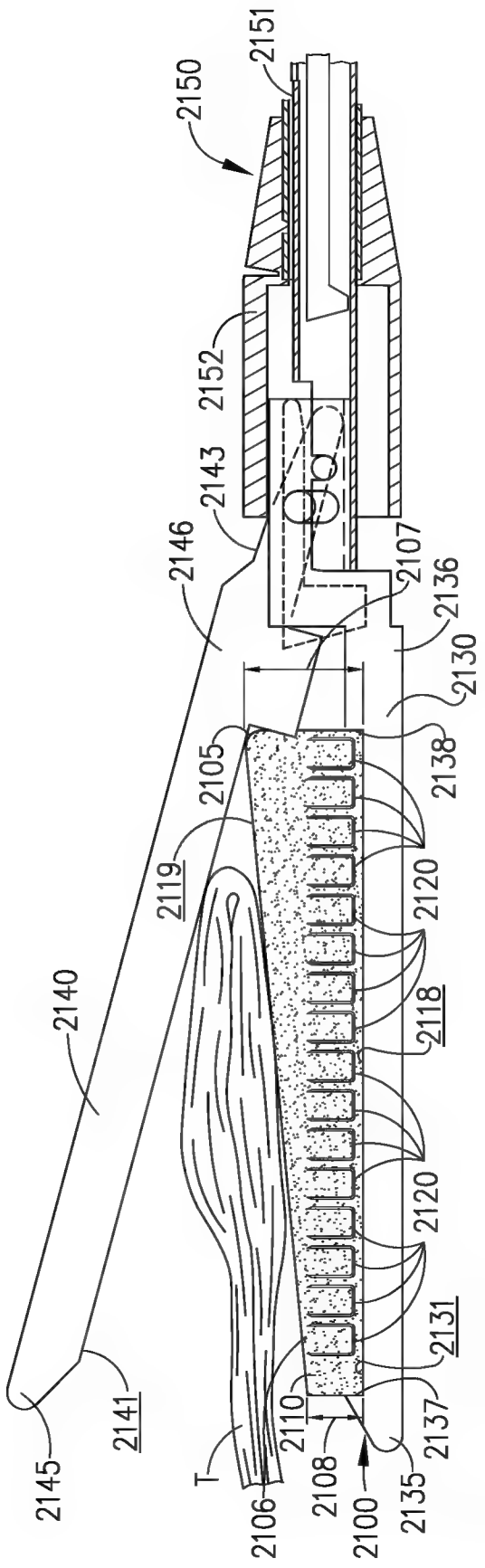
2151
2150
2152
2143
2146
2107
2136
2130
2105
2138
2119
2120
2140
2118
2120
2131
2141
2110
2137
2145
2108
2135
2106
2100

FIG. 110

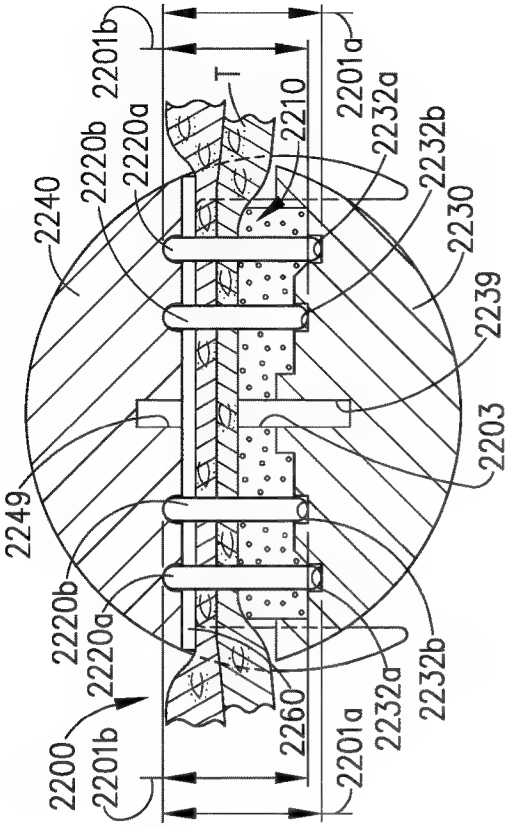

FIG. 111

FIG. 112

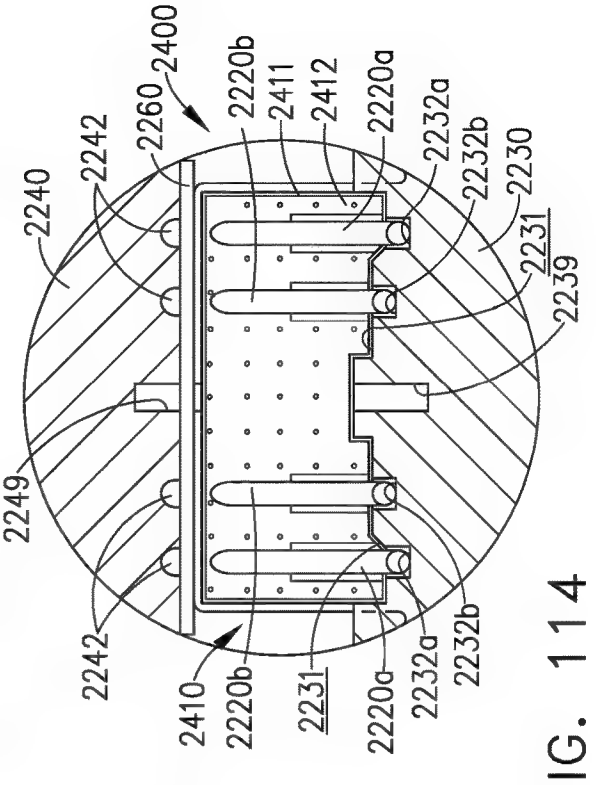

FIG. 114

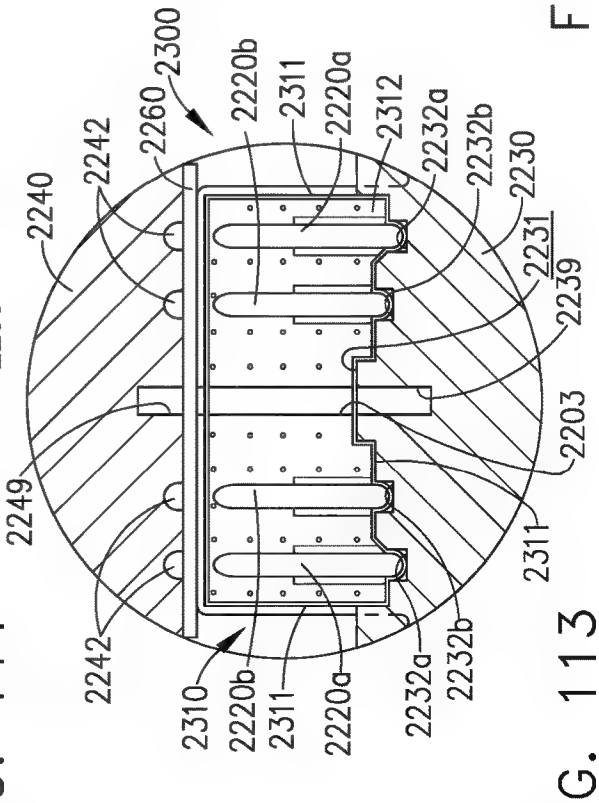

FIG. 113

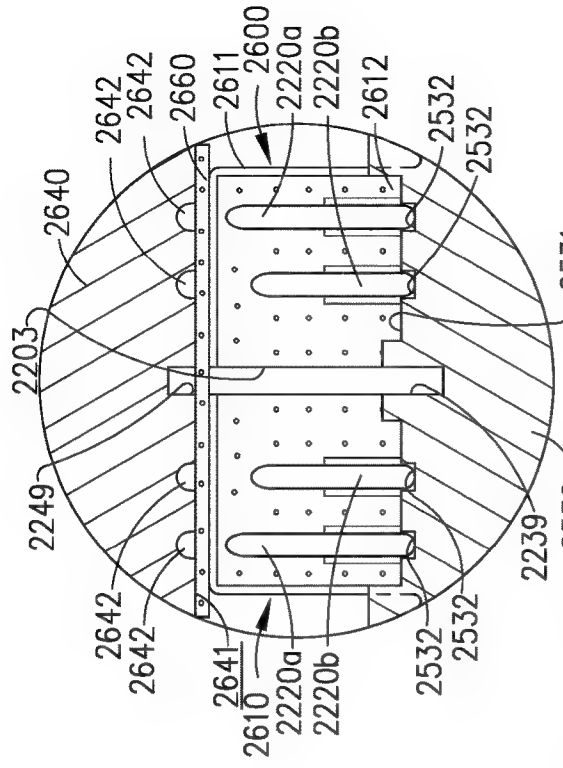

FIG. 116

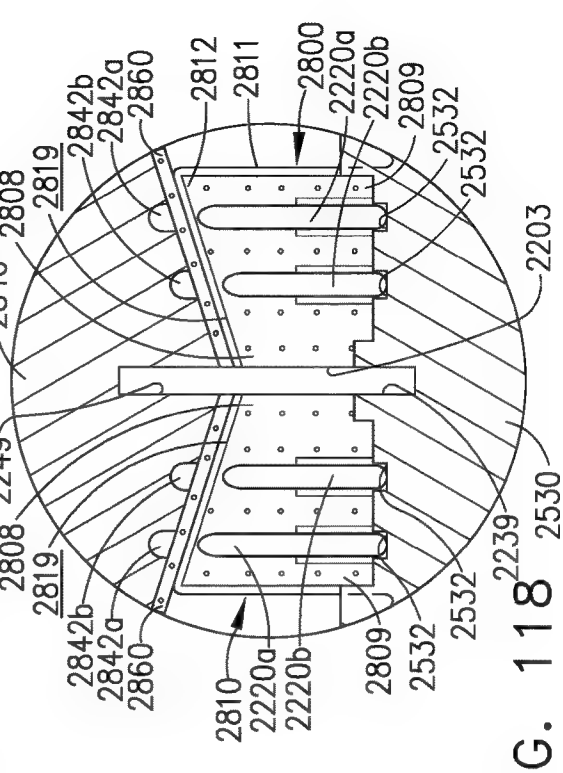

FIG. 118

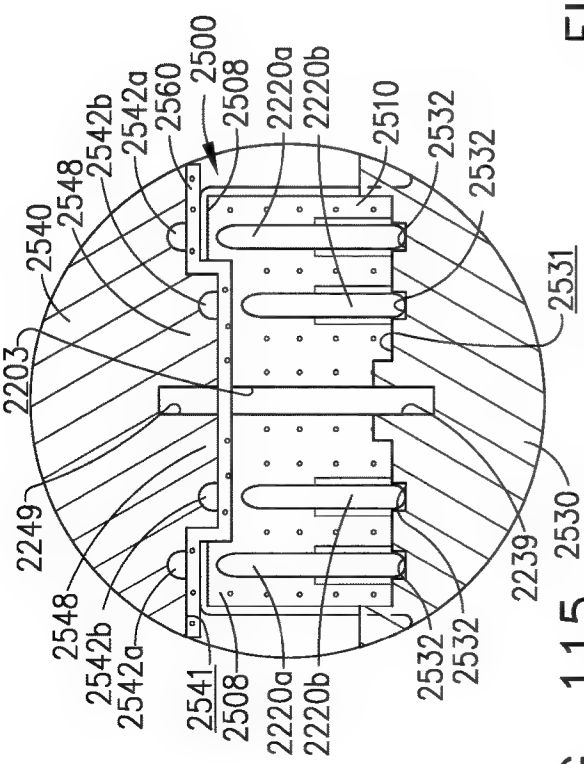

FIG. 115

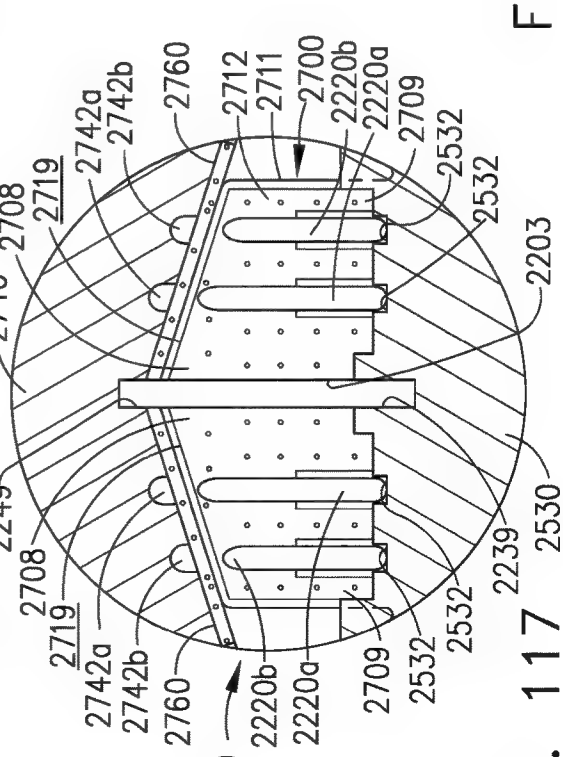

FIG. 117

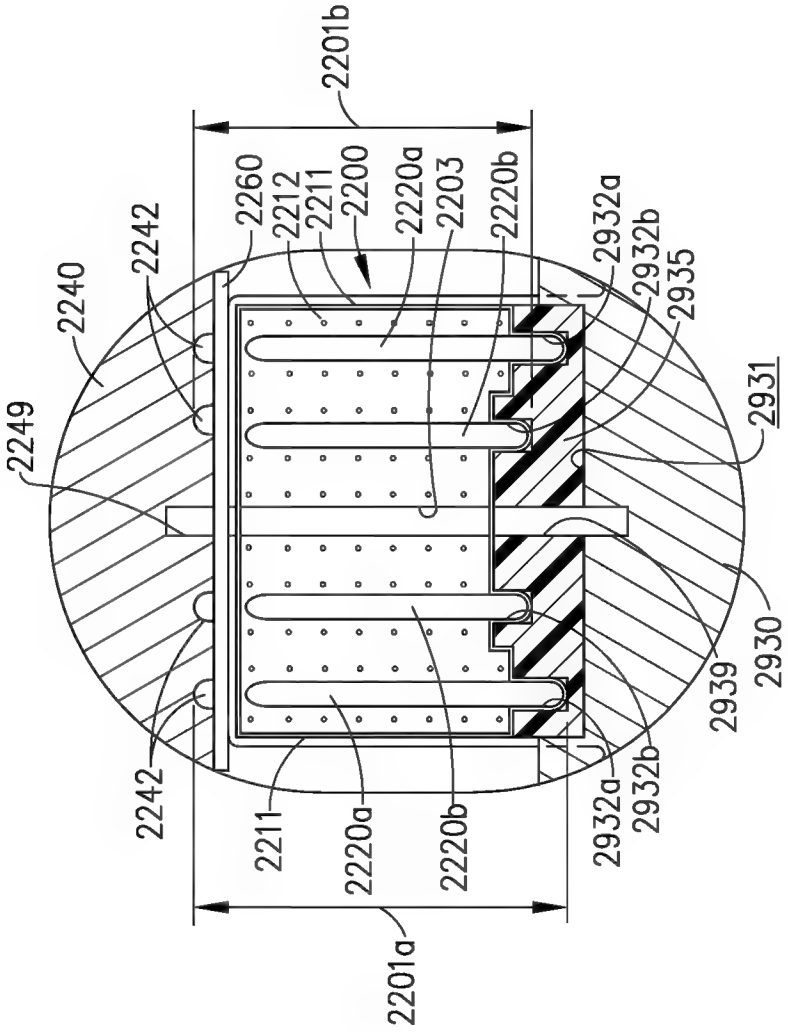
2201b
2260
2212
2211
2200
2220a
2203
2220b
2932a
2932b
2935
2931
2930
2939
2240
2242
2249
2242
2211
2220a
2220b
2932a
2932b
2201a

FIG. 119

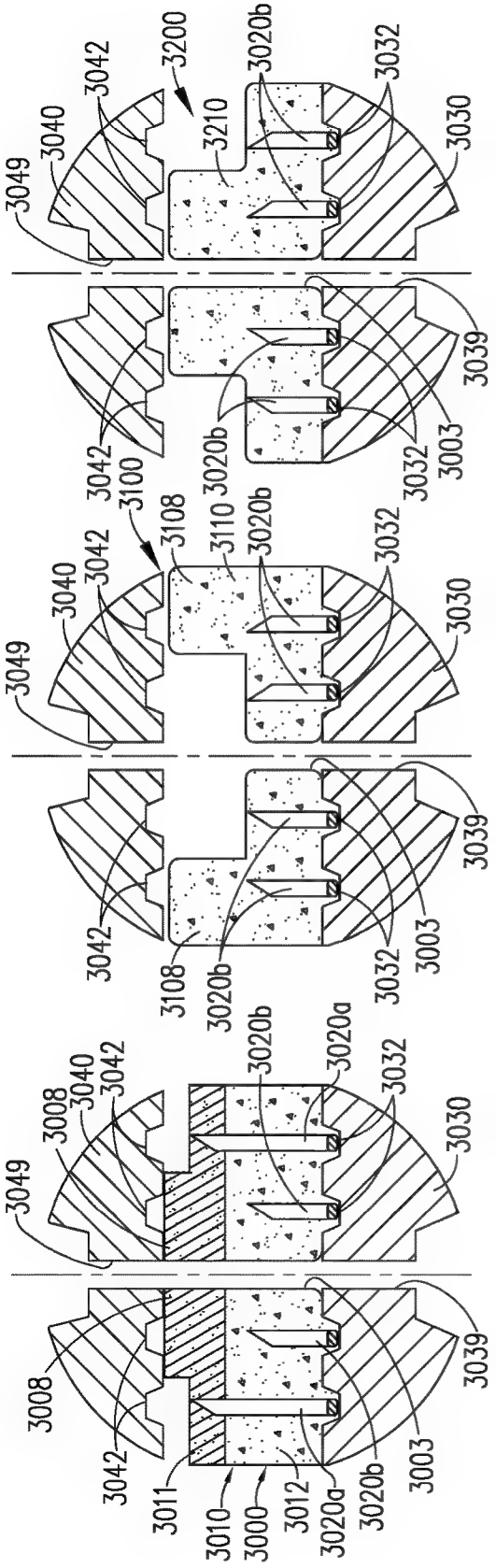

FIG. 120

FIG. 121

FIG. 122

FIG. 124

FIG. 123

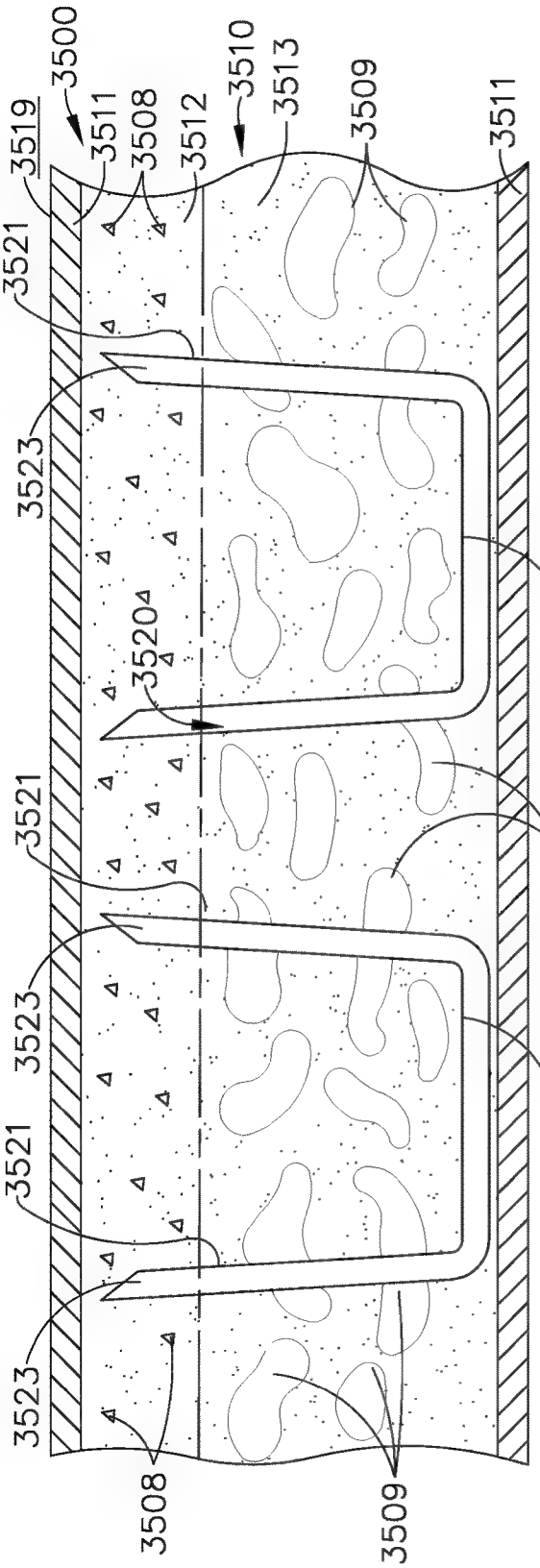

FIG. 125

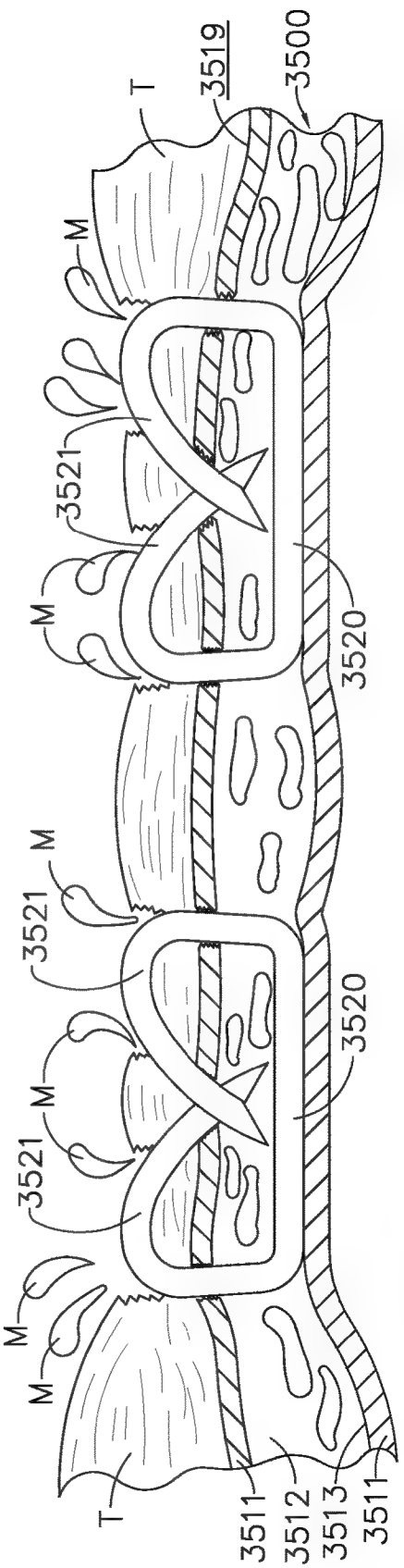

FIG. 126

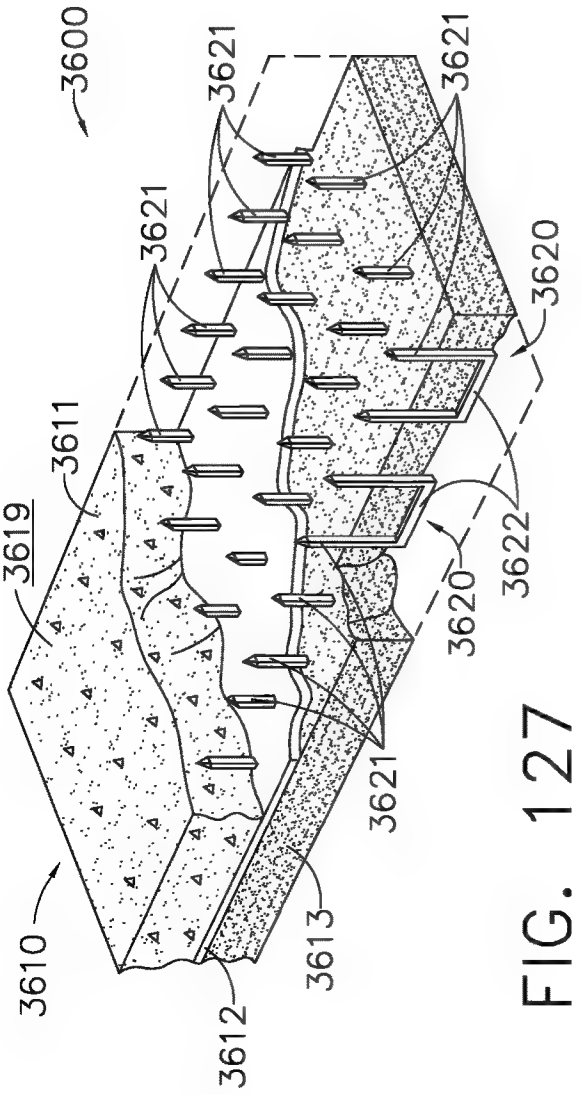

FIG. 127

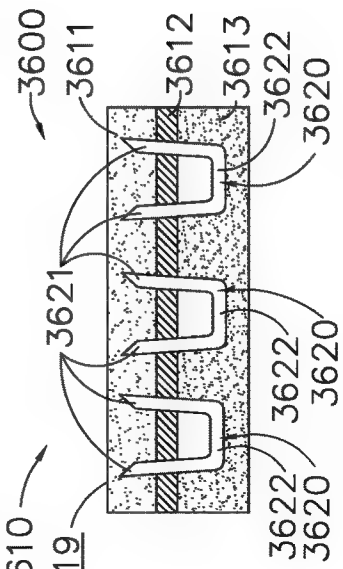

FIG. 128

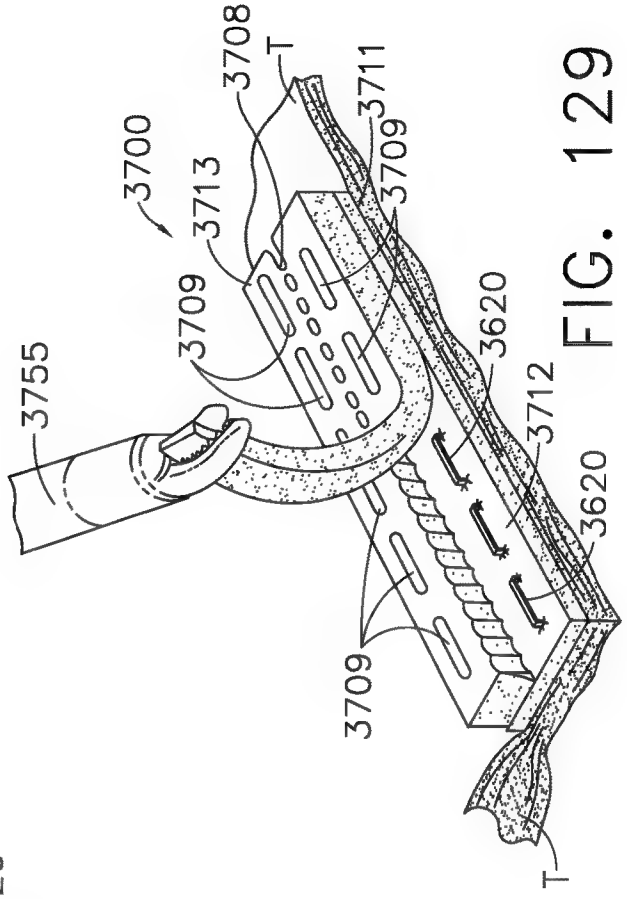

FIG. 129

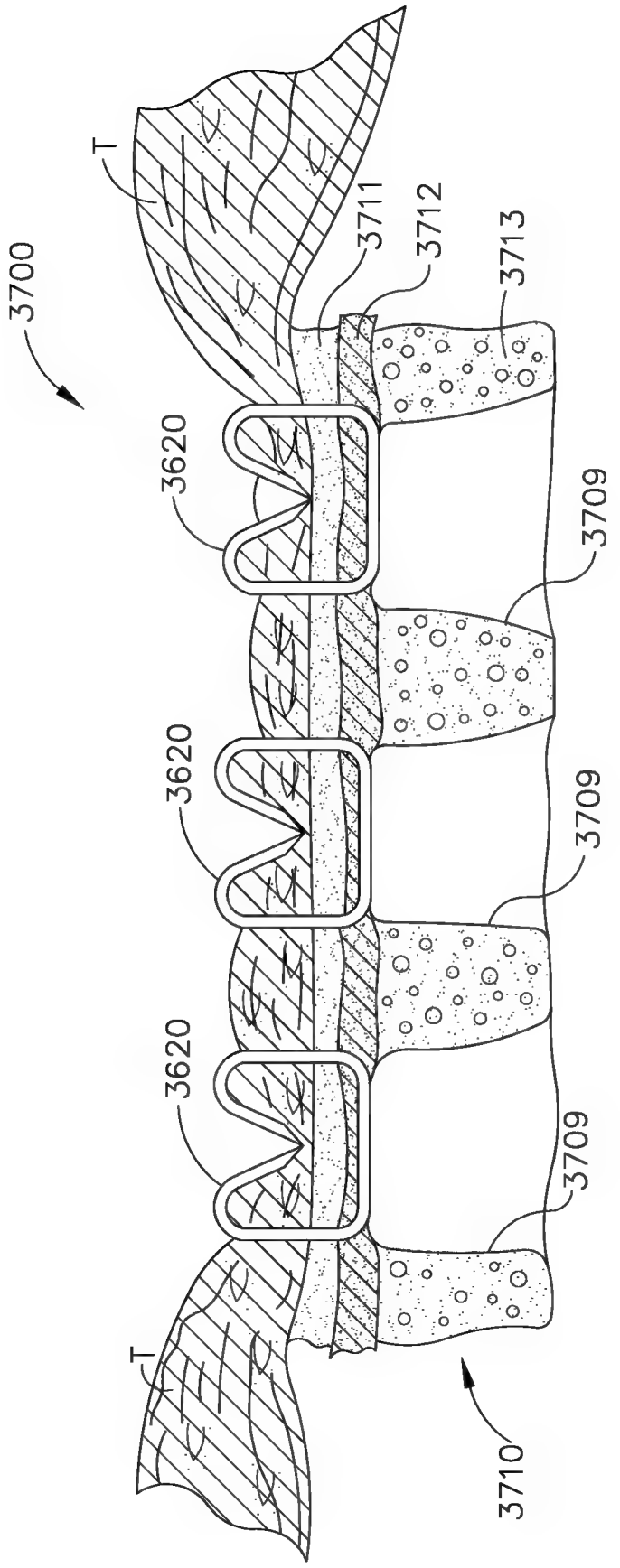

FIG. 130

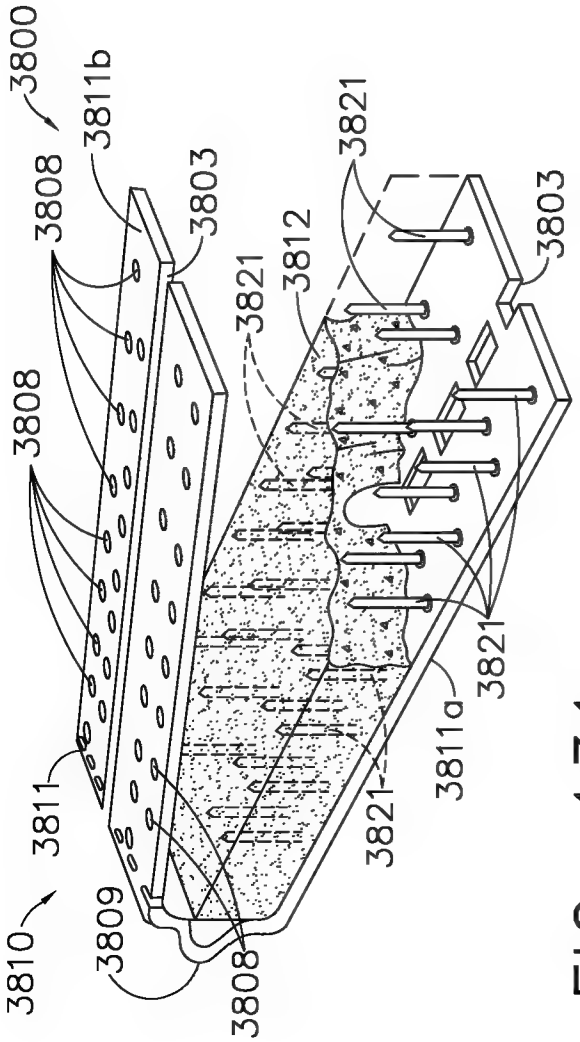

FIG. 131

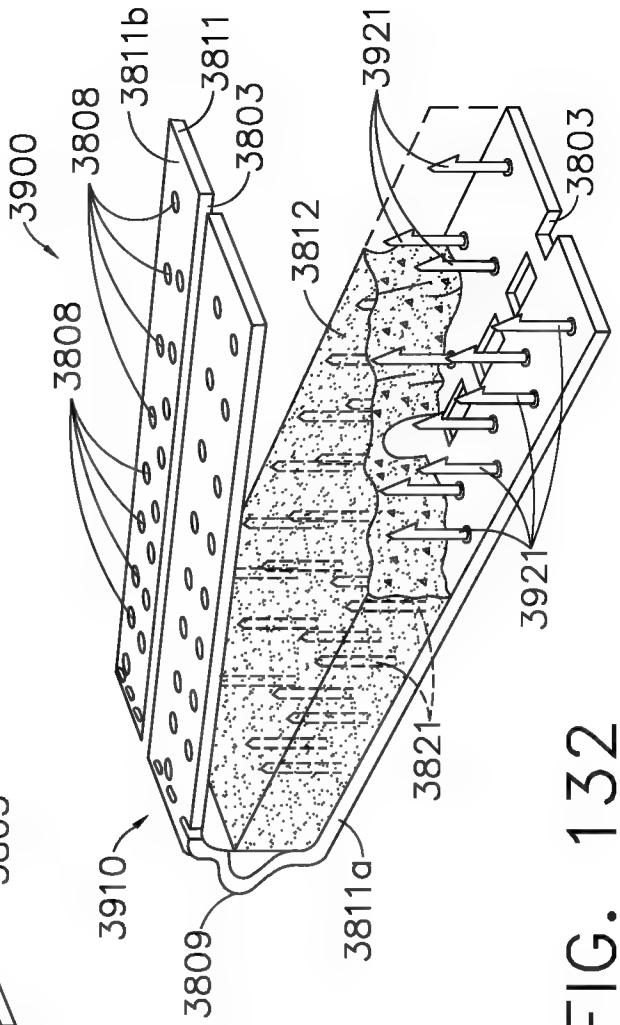

FIG. 132

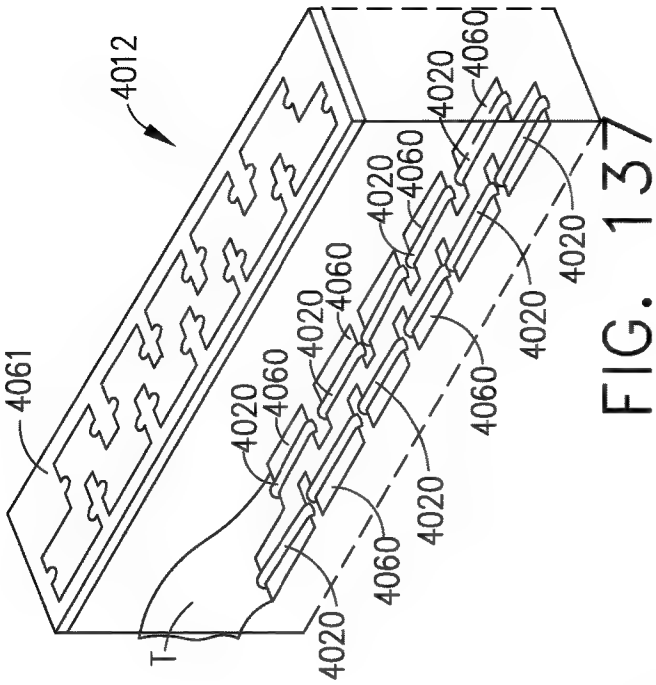

FIG. 137

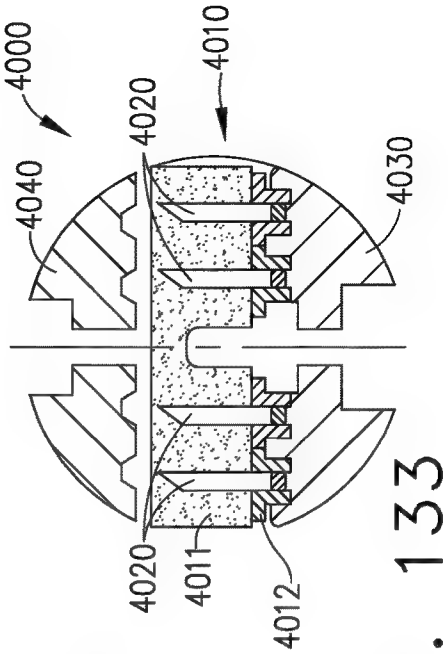

FIG. 133

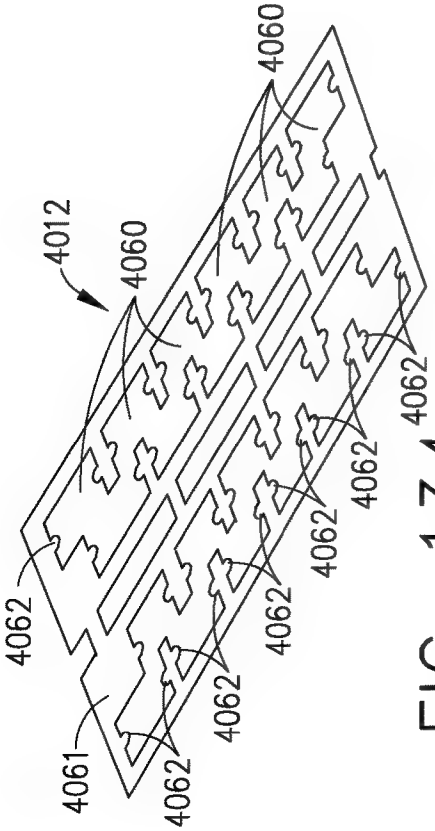

FIG. 134

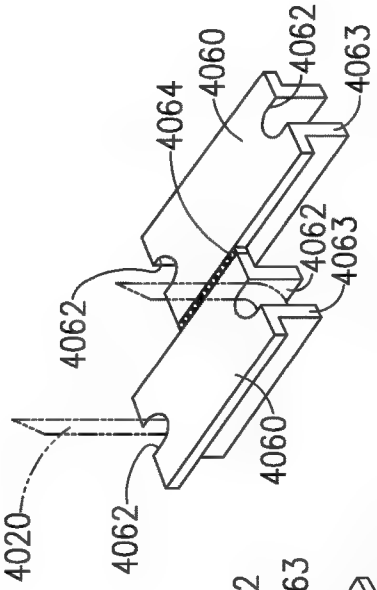

FIG. 136

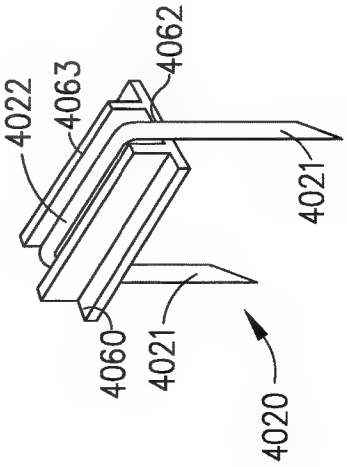

FIG. 135

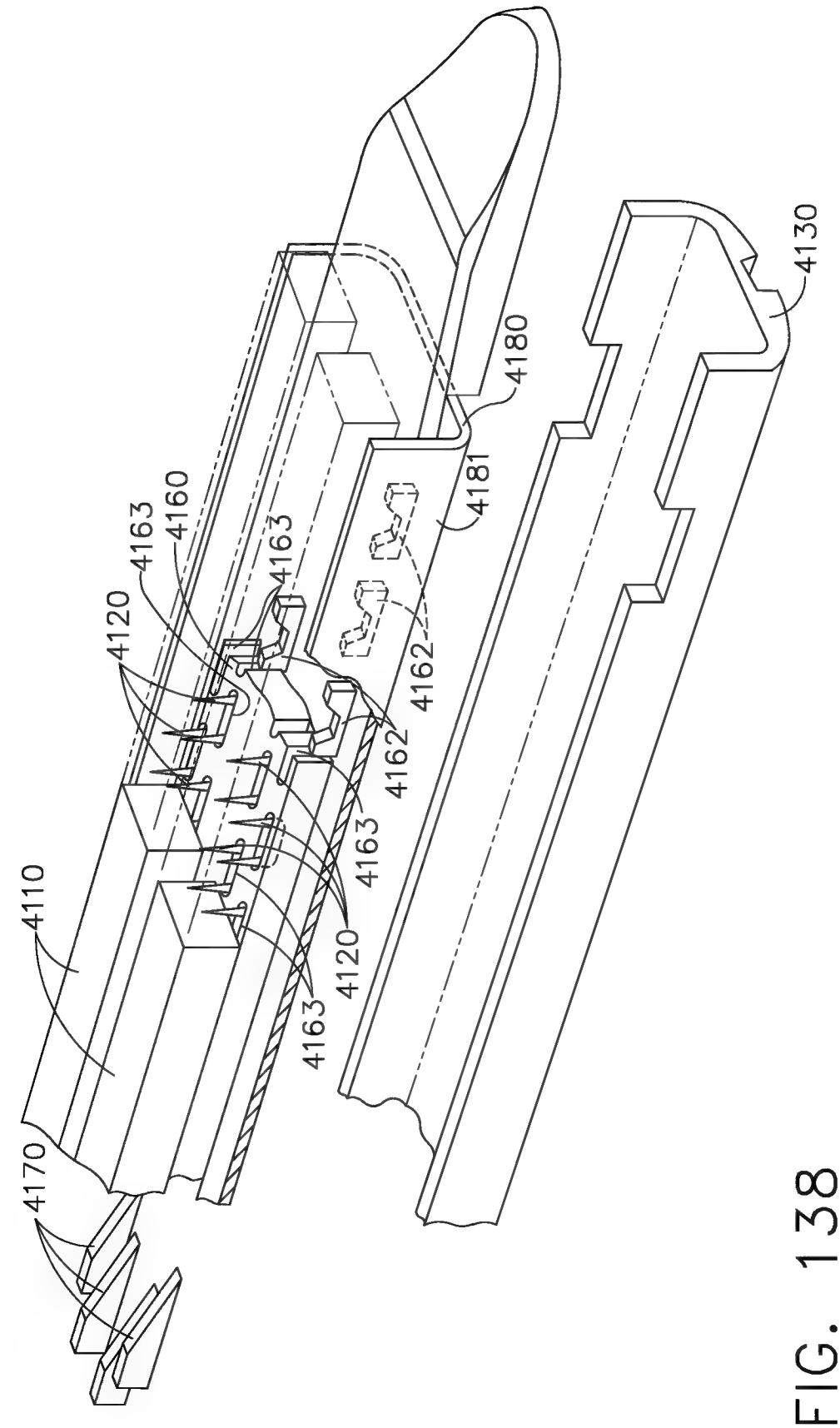
4130
4180
4181
4160
4163
4163
4120
4162
4162
4163
4110
4120
4163
4170

FIG. 138

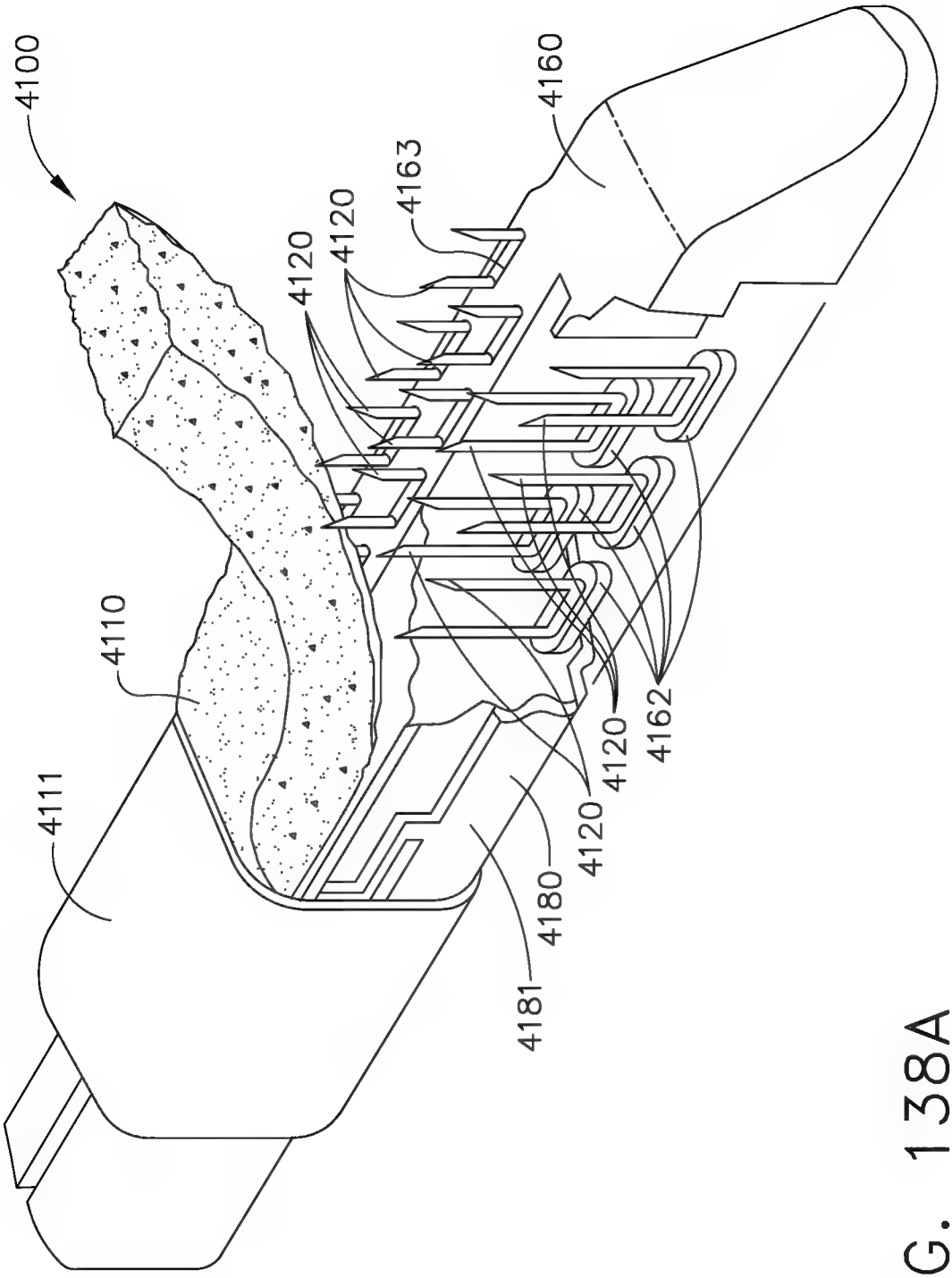

FIG. 138A

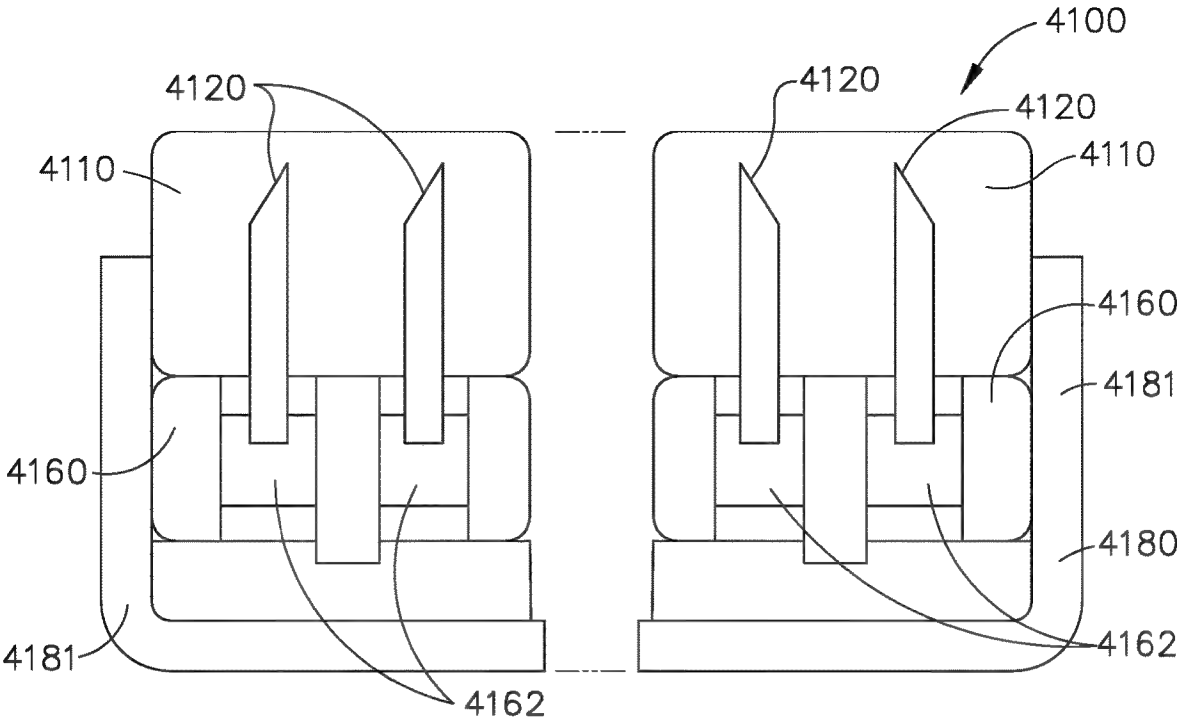

FIG. 139

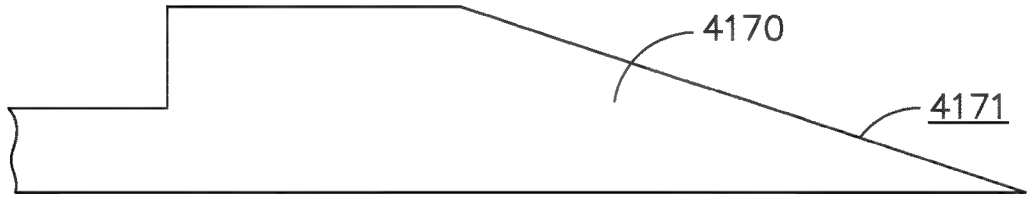

FIG. 140

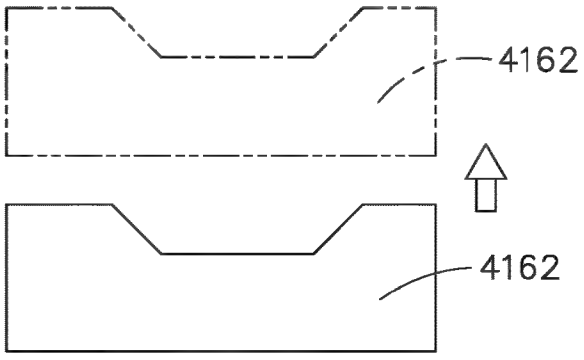

FIG. 141

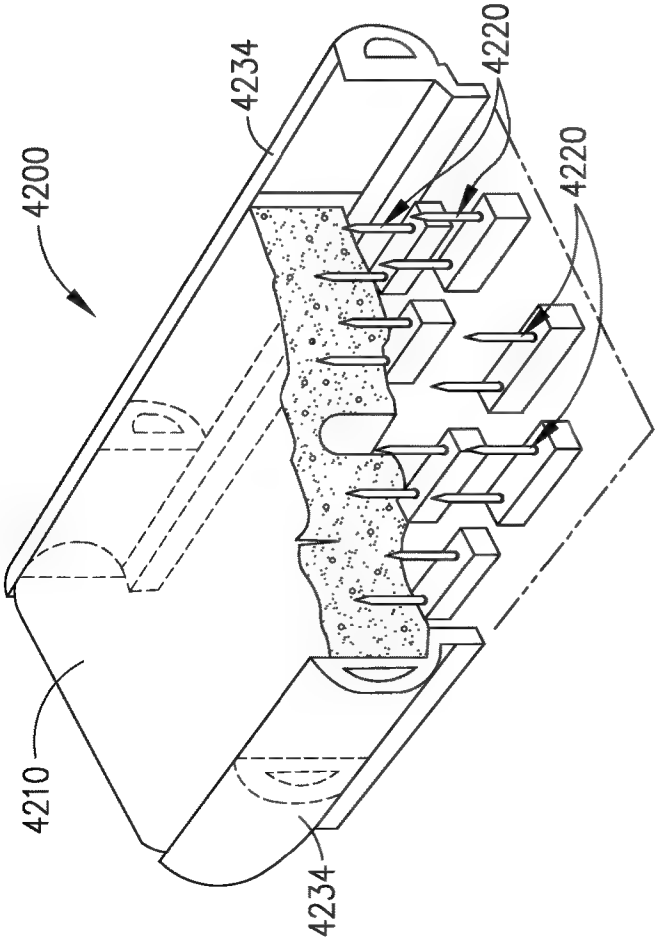

FIG. 142

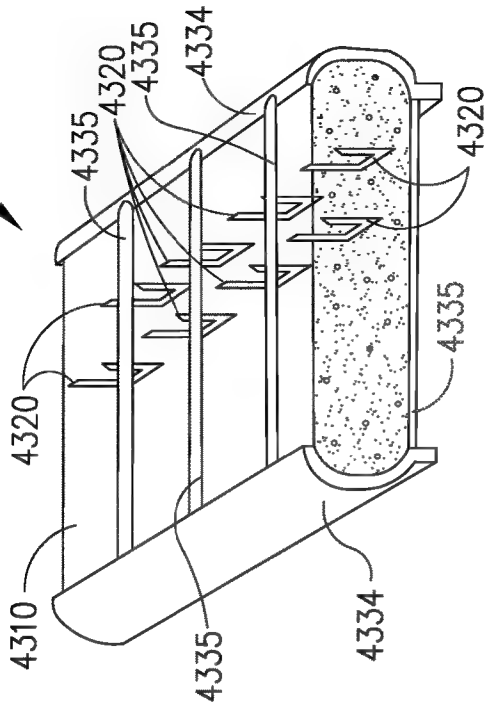

FIG. 146

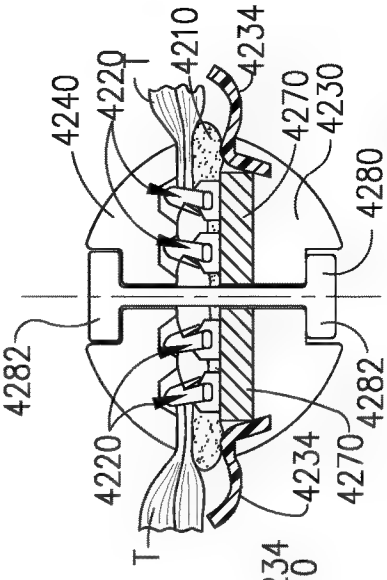

FIG. 145

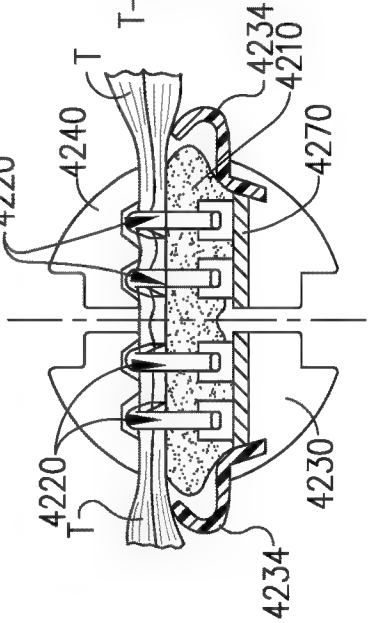

FIG. 144

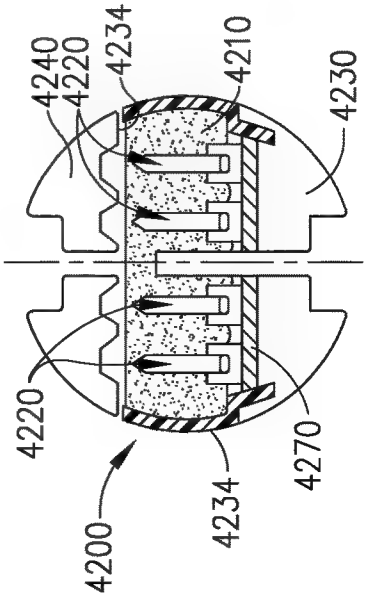

FIG. 143

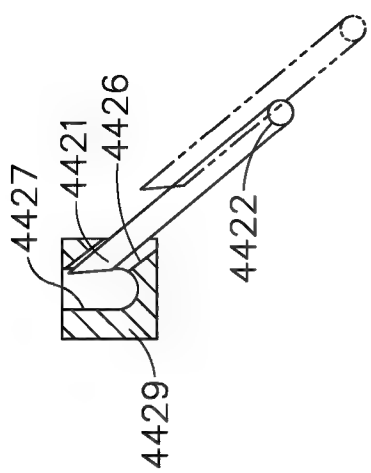

FIG. 150A

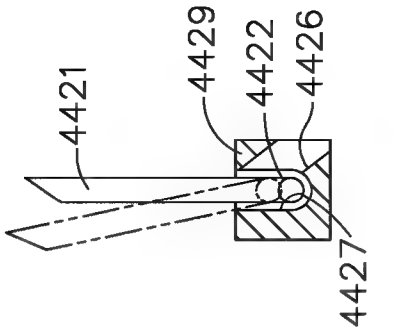

FIG. 150C

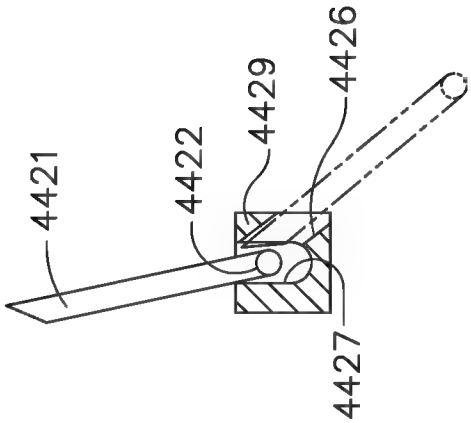

FIG. 150B

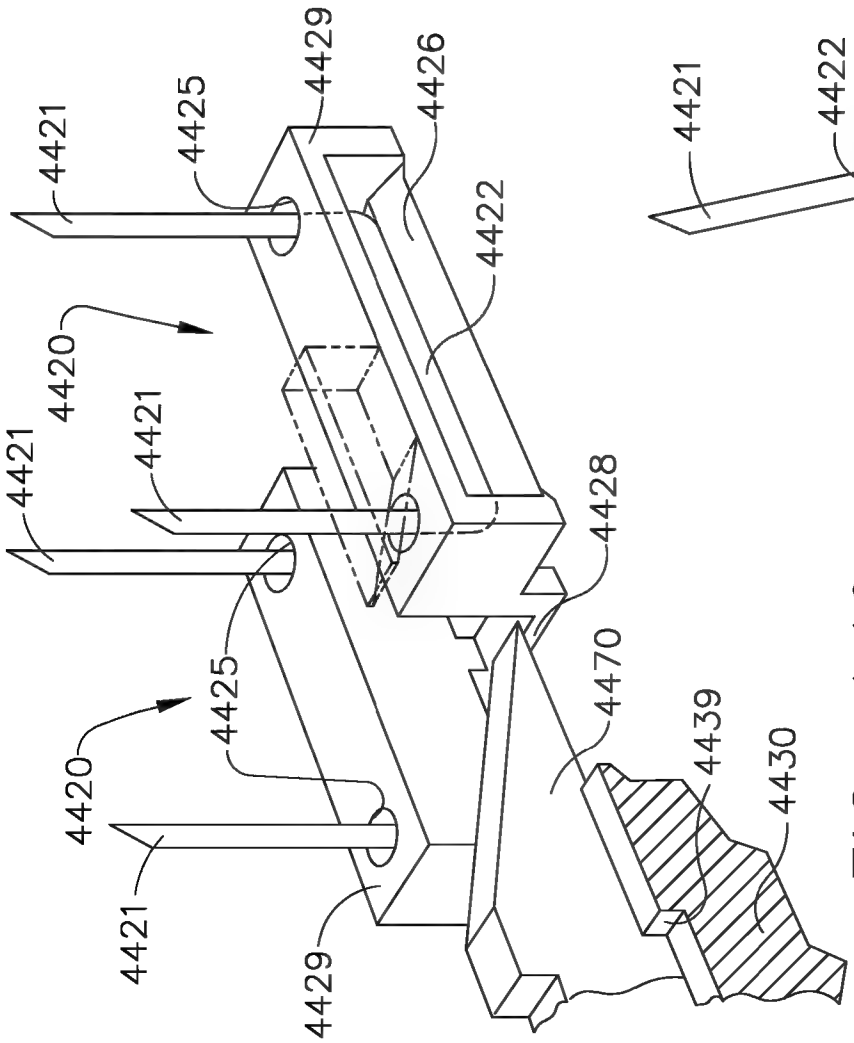

FIG. 149

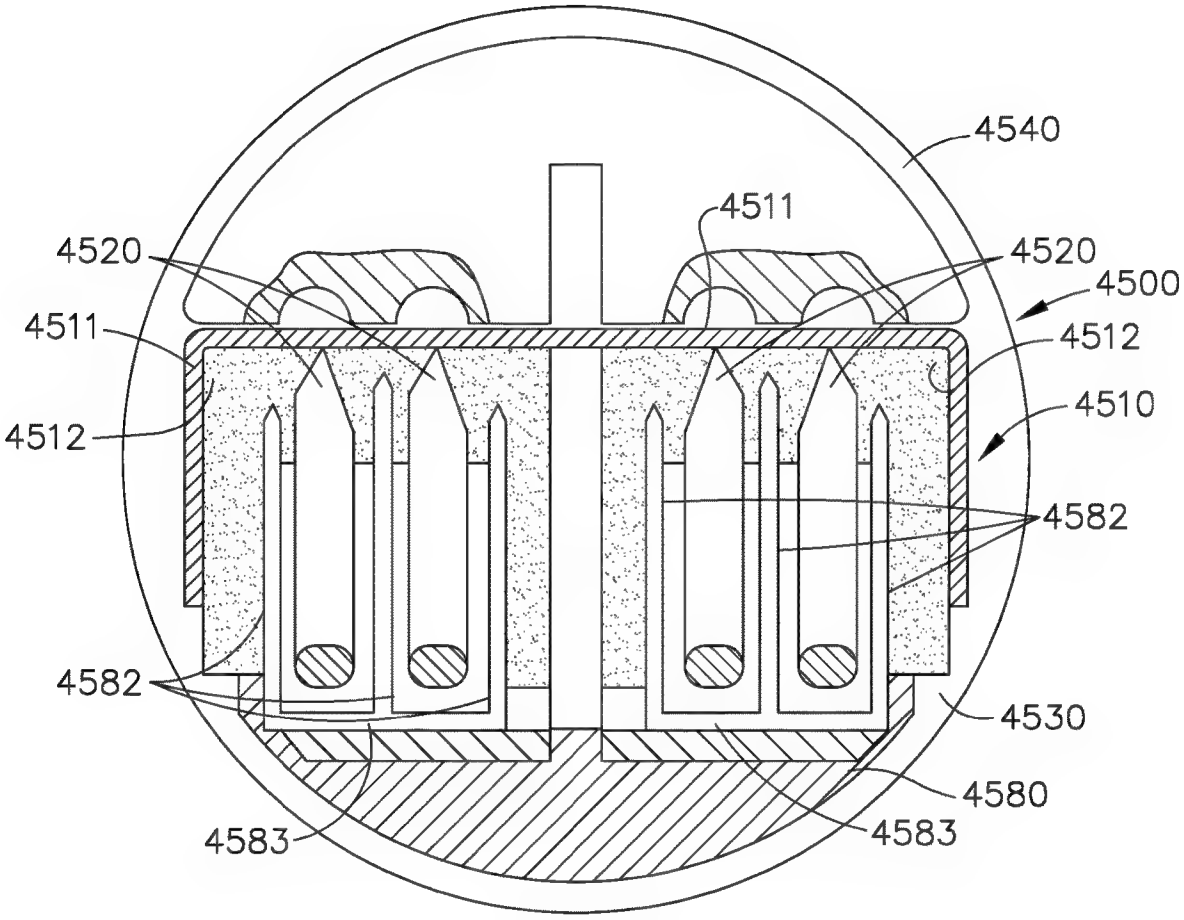
4540
4511
4520
4520
4500
4511
4512
4512
4510
4582
4582
4530
4580
4583
4583

FIG. 151

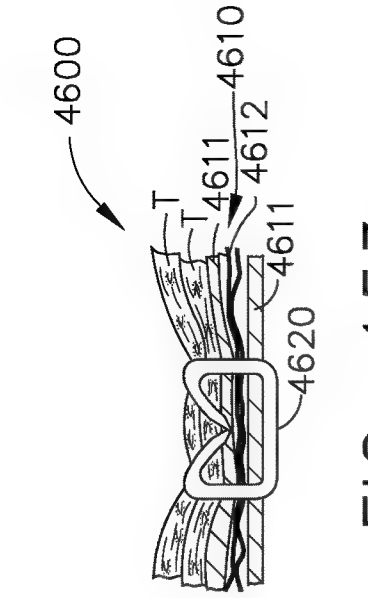

FIG. 153

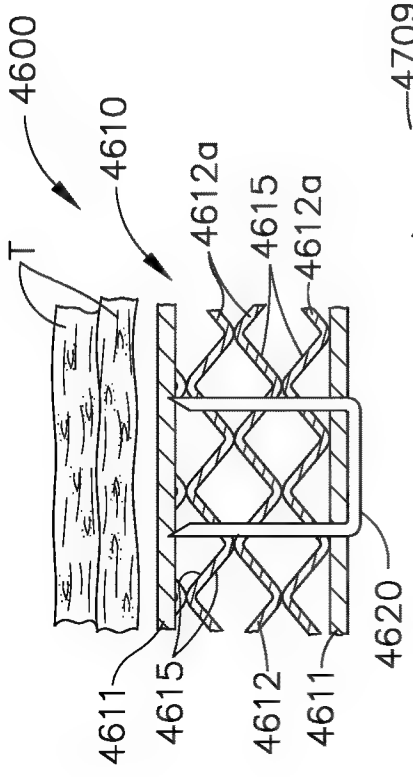

FIG. 152

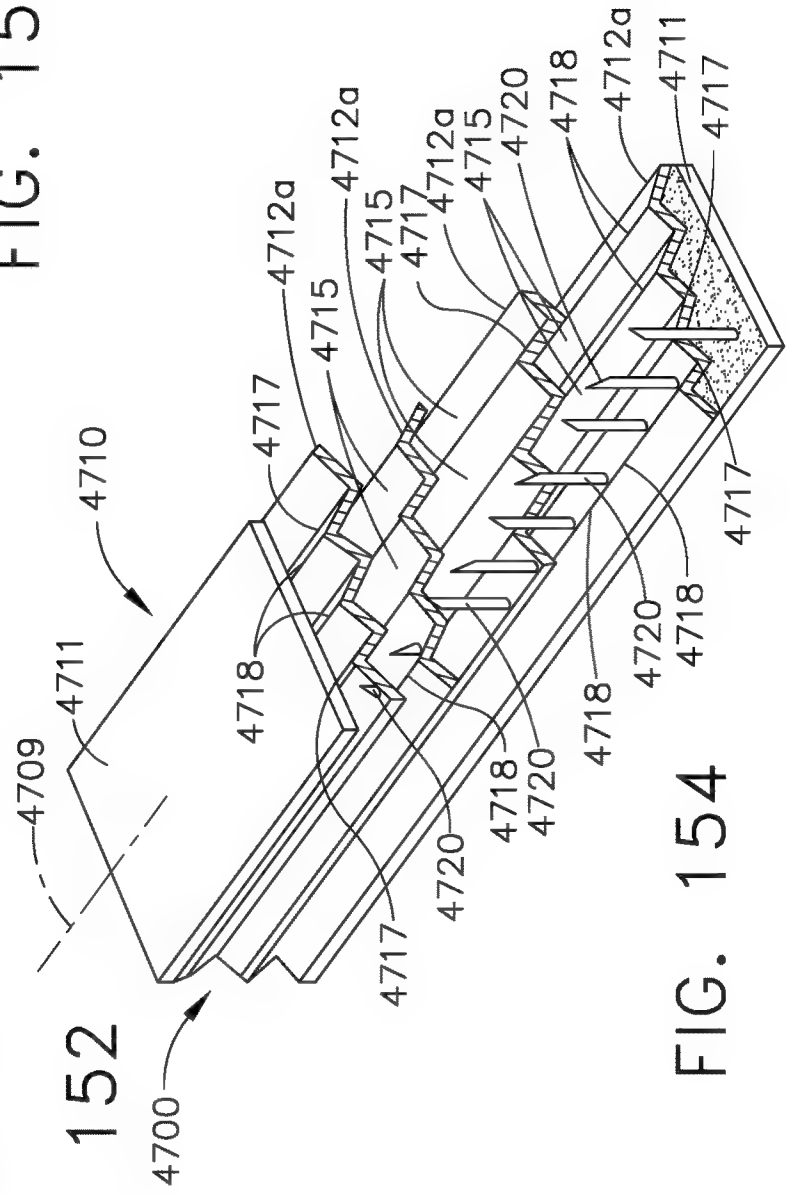

FIG. 154

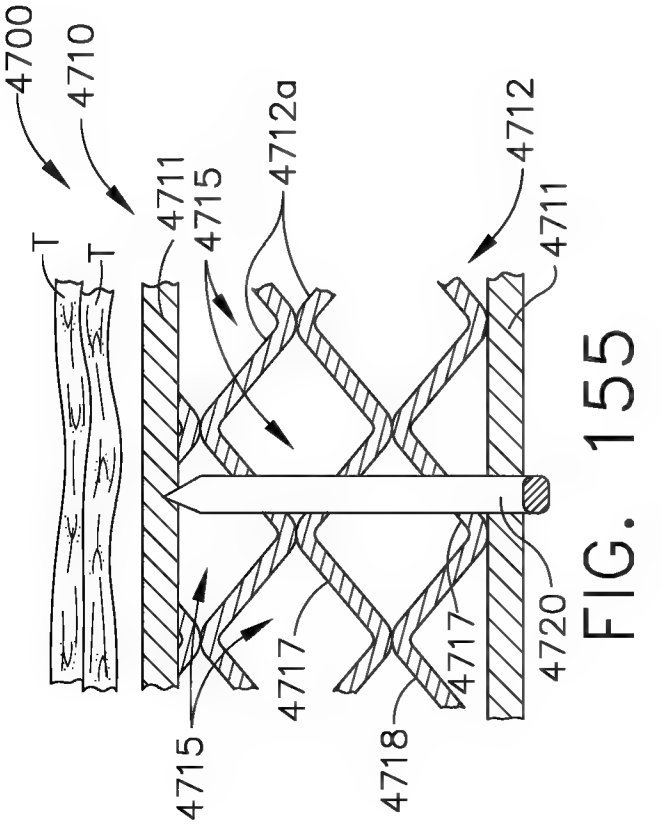

FIG. 155

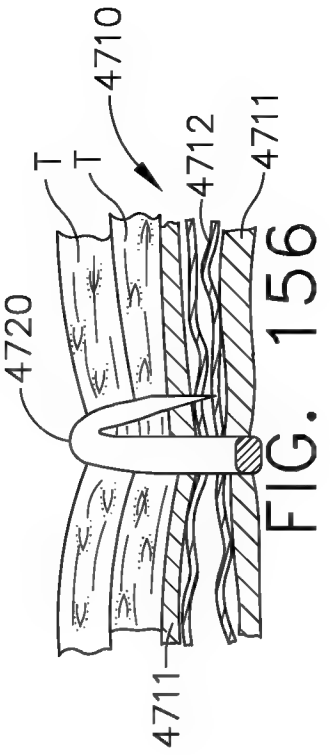

FIG. 156

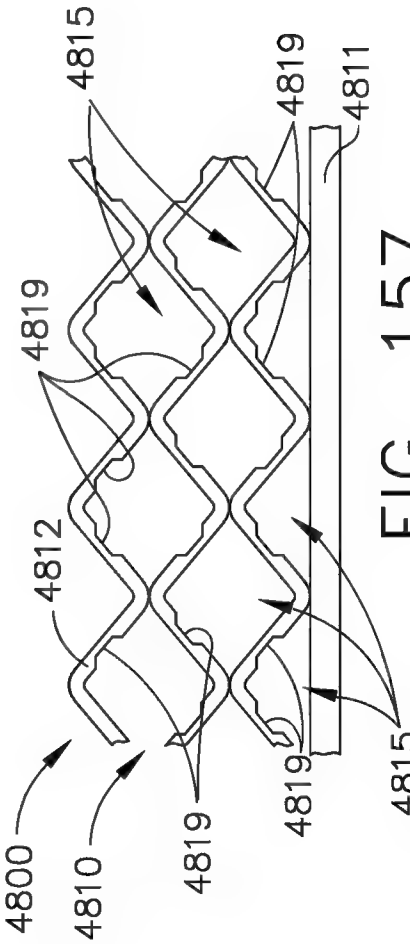

FIG. 157

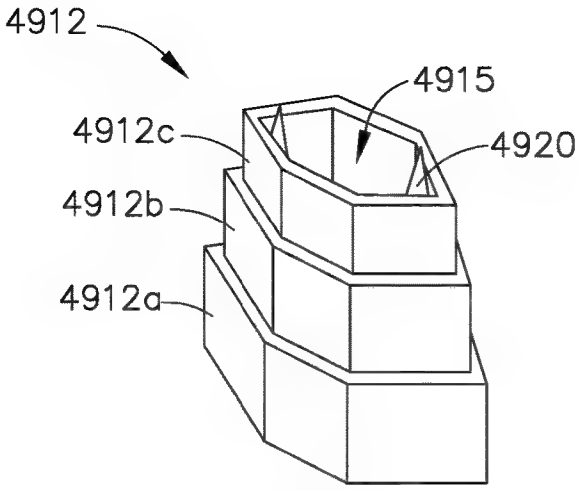

FIG. 159

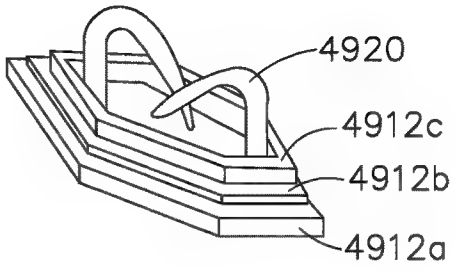

FIG. 160

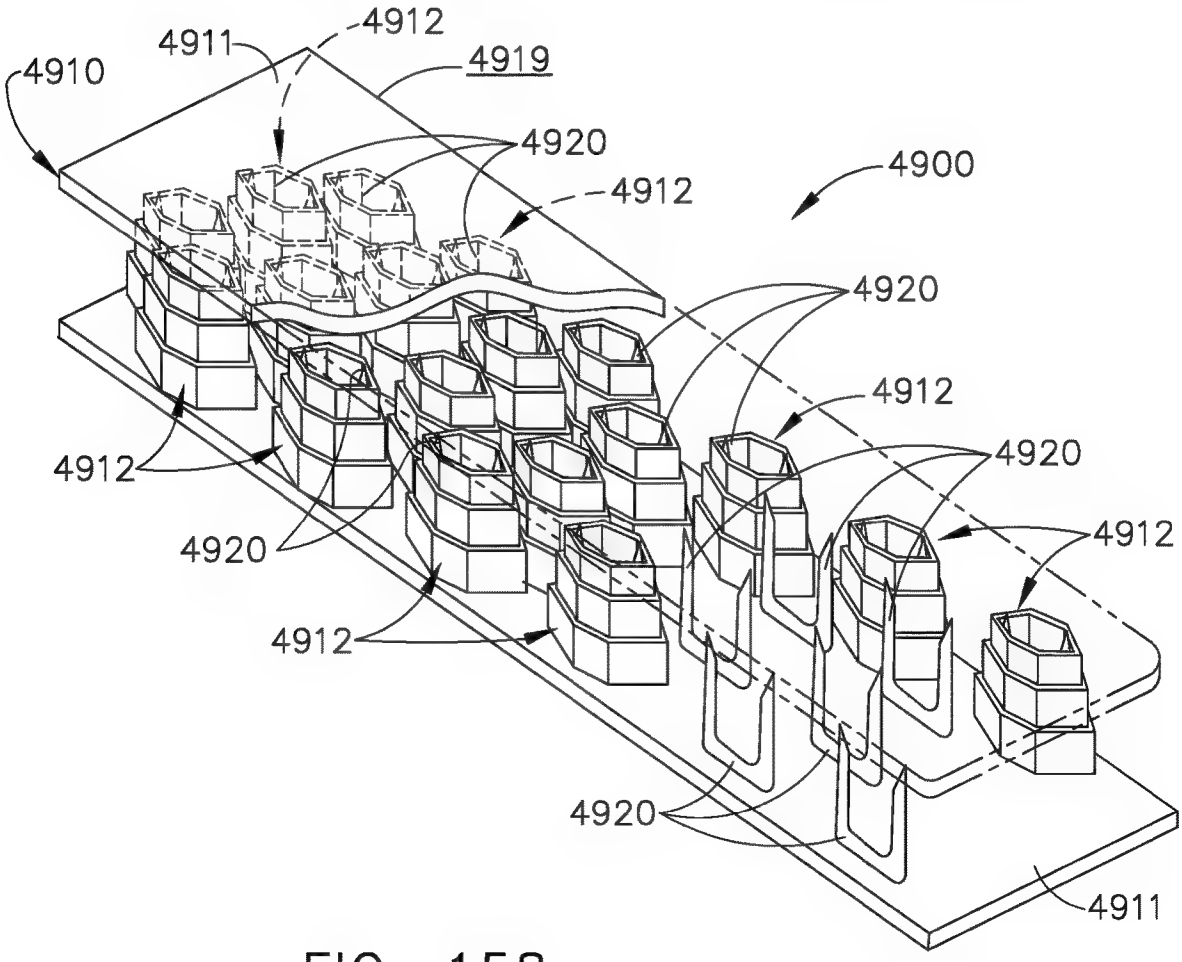

FIG. 158

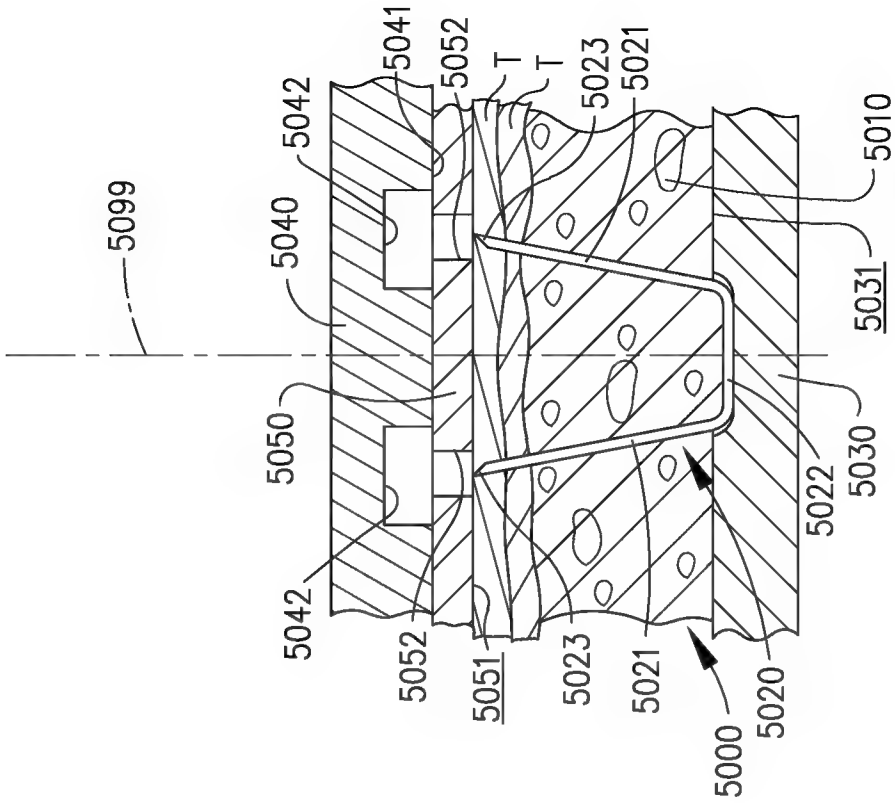

FIG. 161B

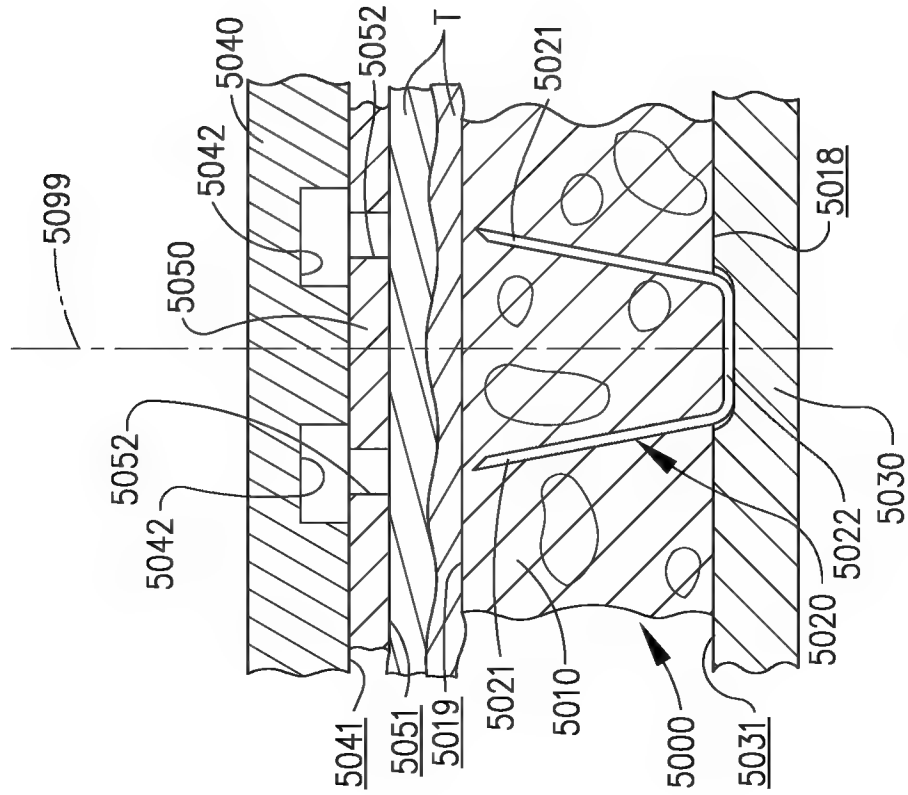

FIG. 161A

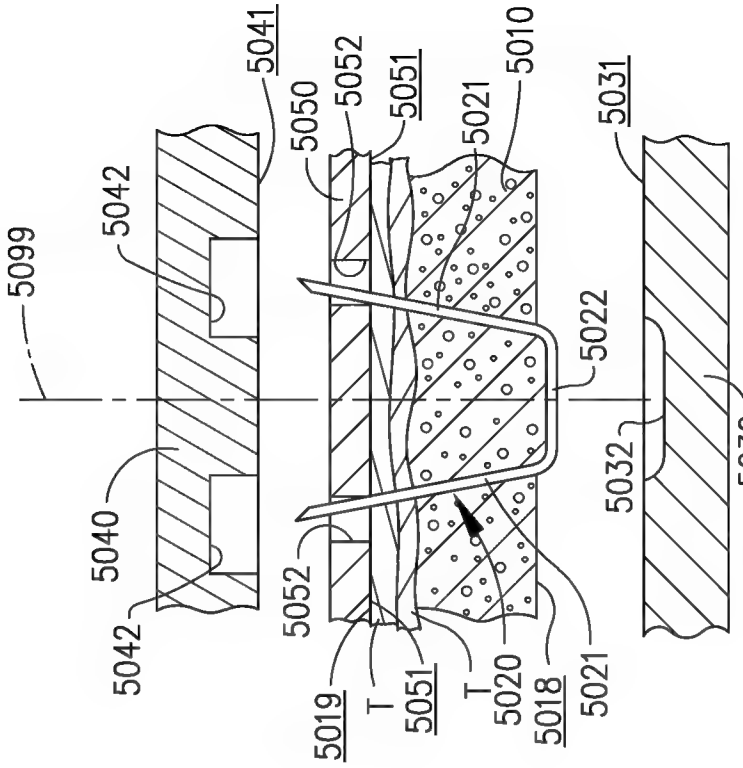

FIG. 161D

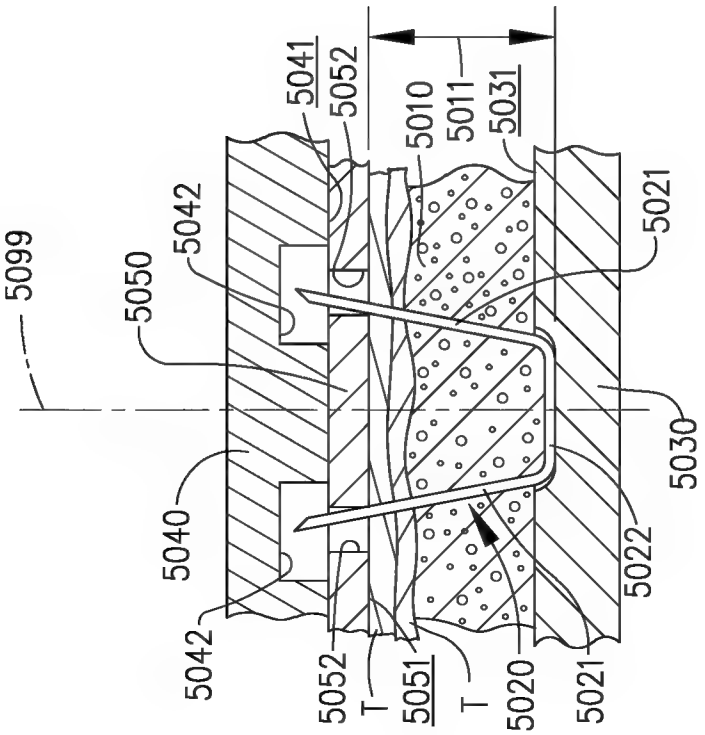

FIG. 161C

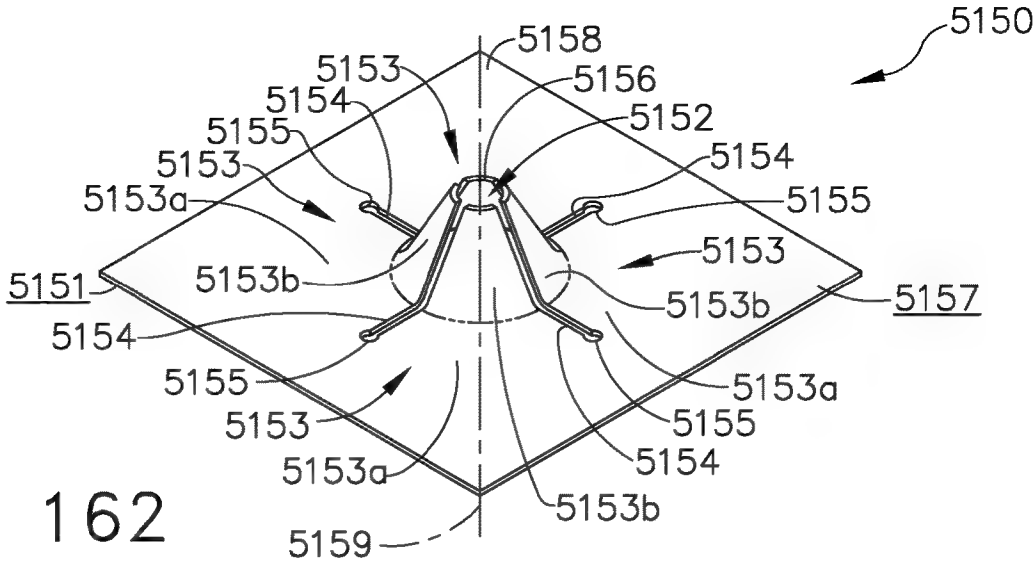

FIG. 162

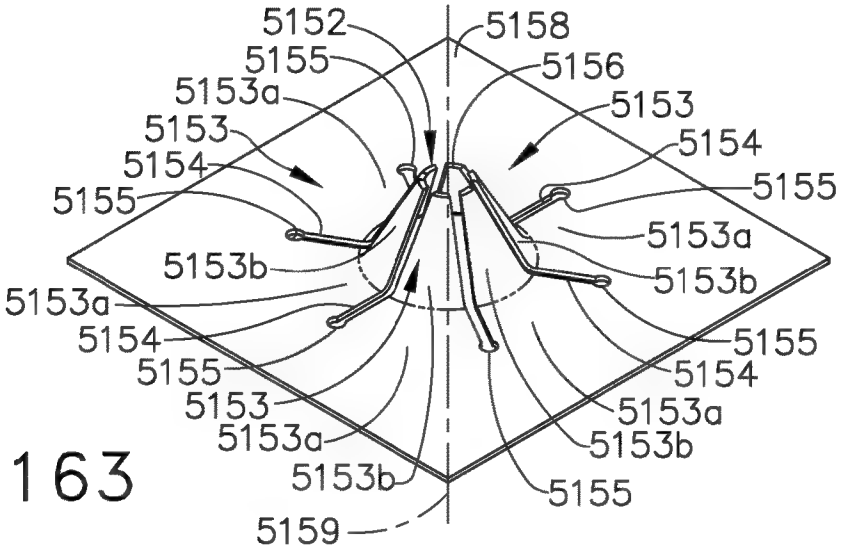

FIG. 163

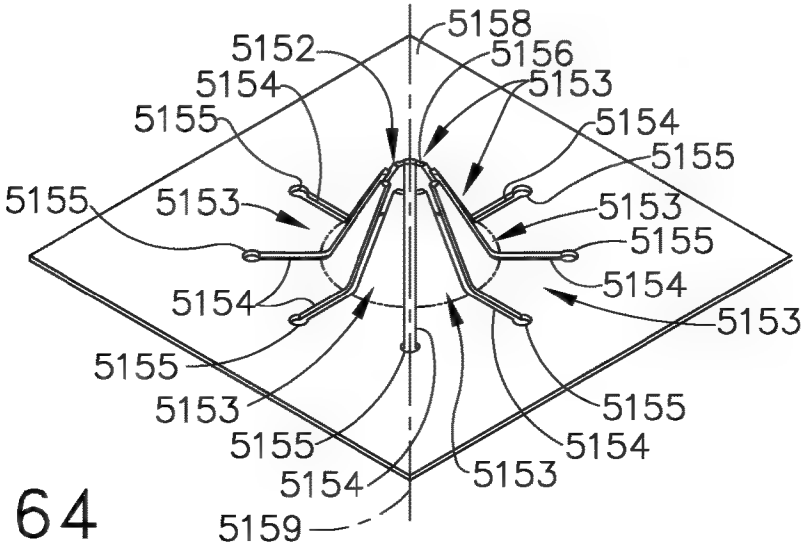

FIG. 164

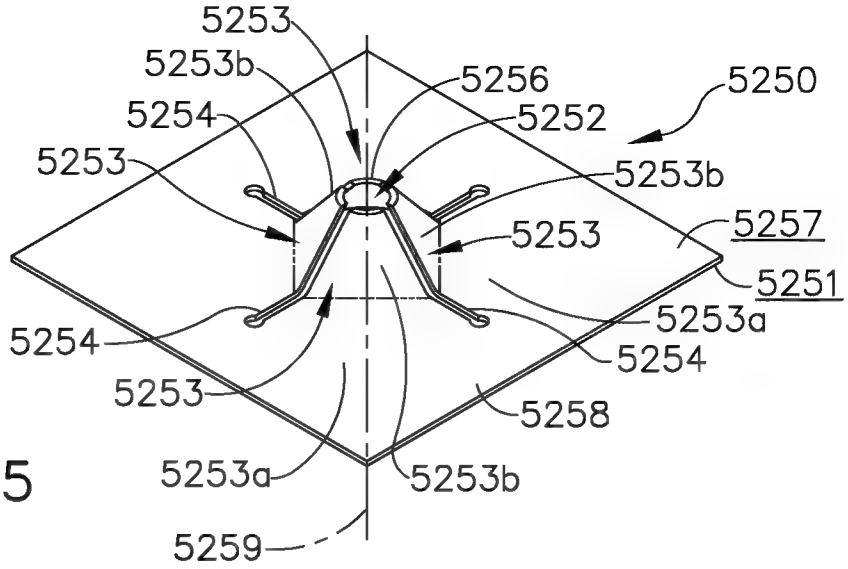

FIG. 165

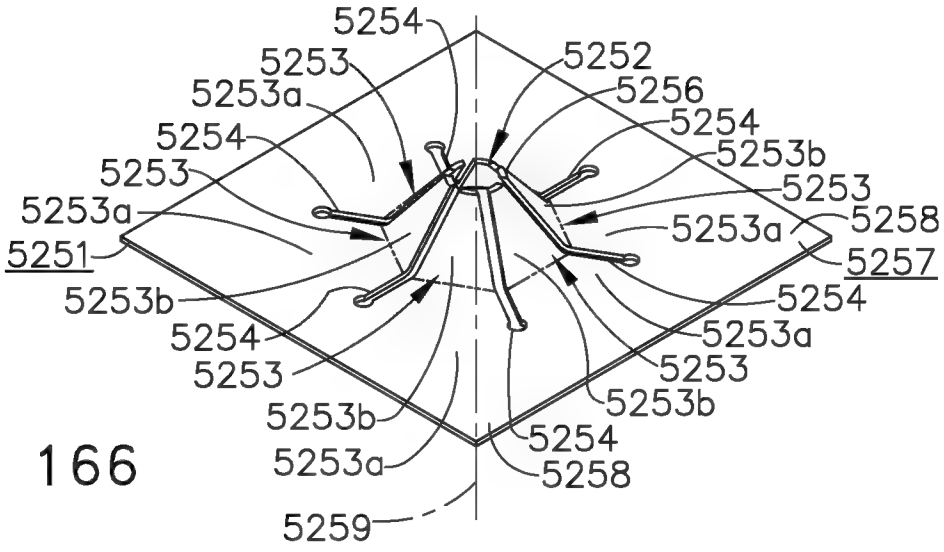

FIG. 166

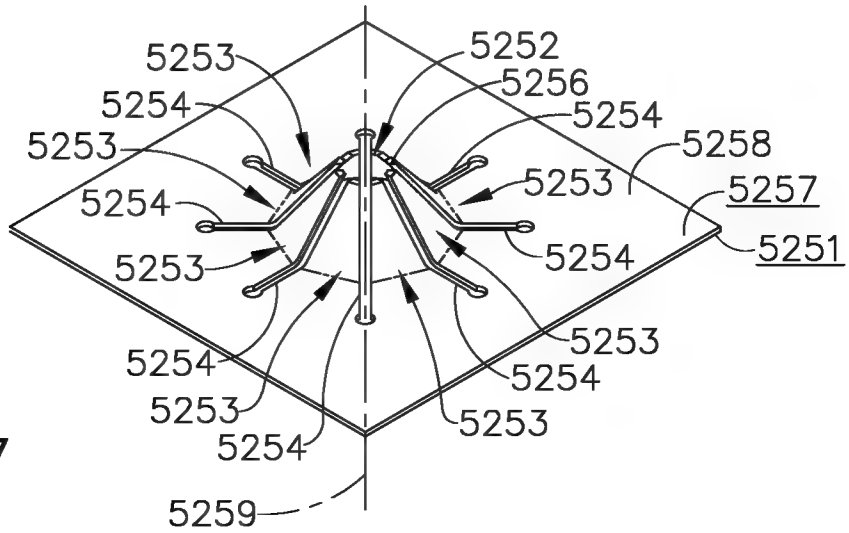

FIG. 167

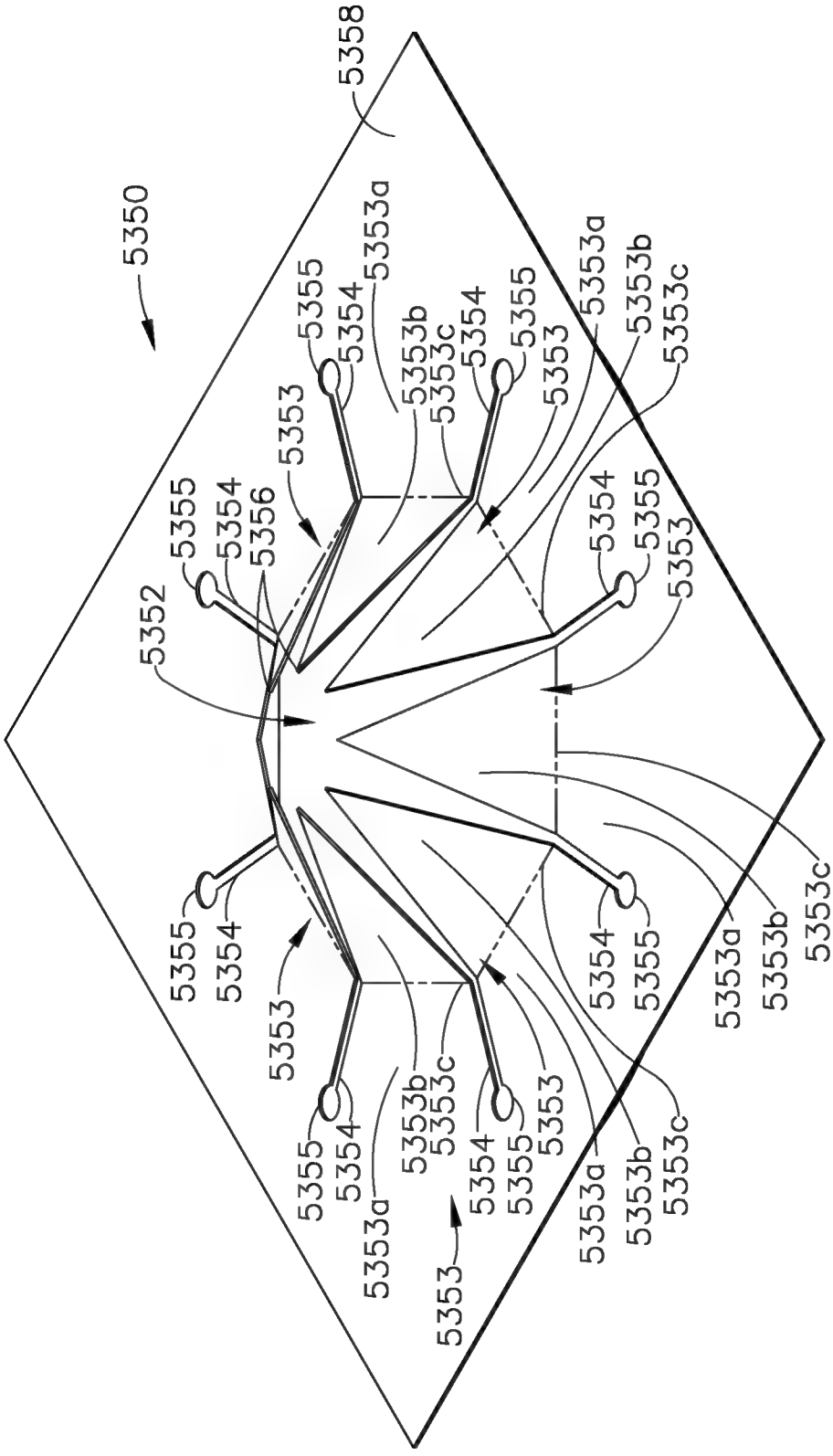

FIG. 168

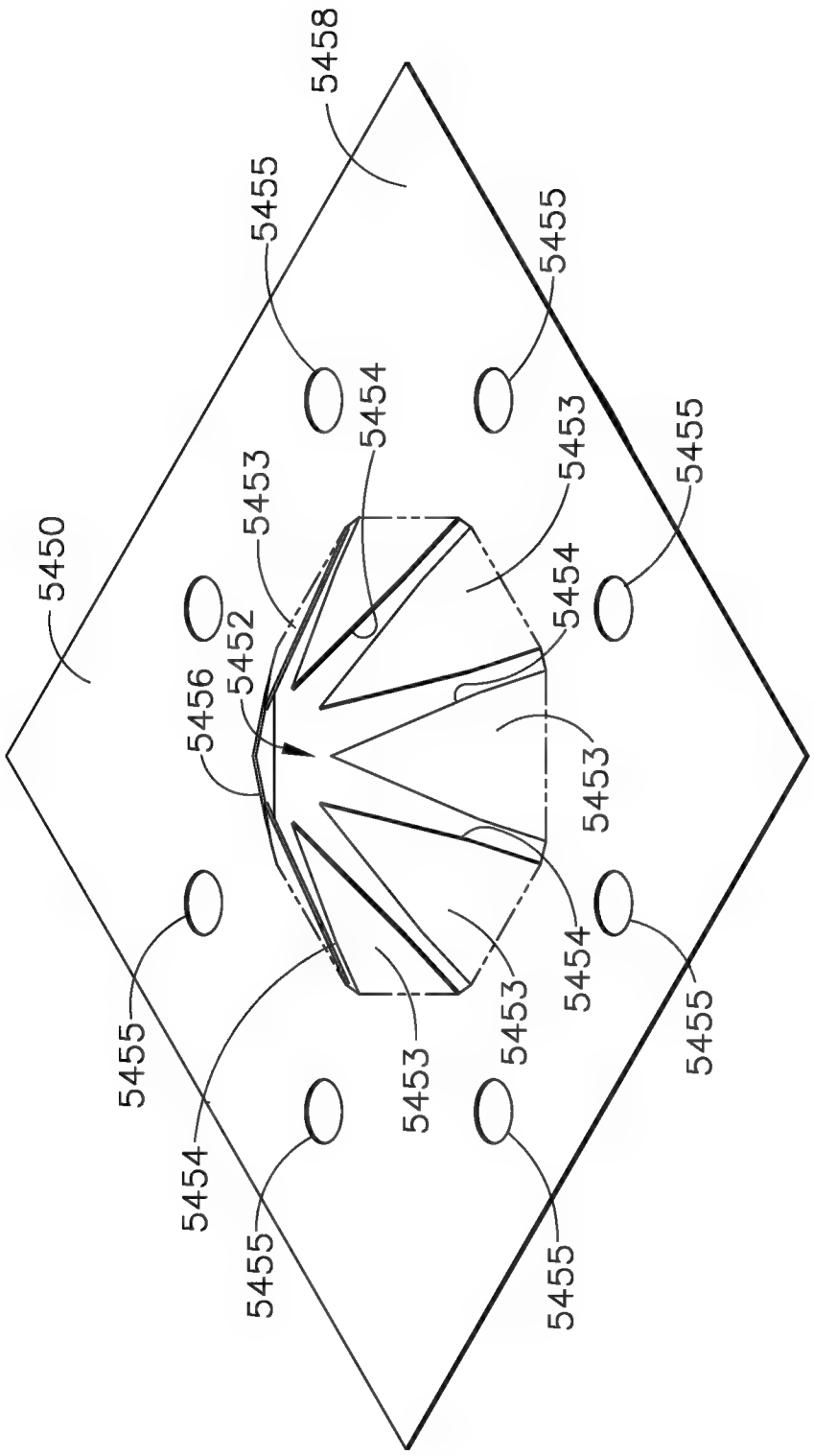
5458
5455
5455
5454
5453
5453
5455
5450
5454
5452
5456
5453
5454
5455
5453
5453
5454
5455
5455
5455
5455

FIG. 169

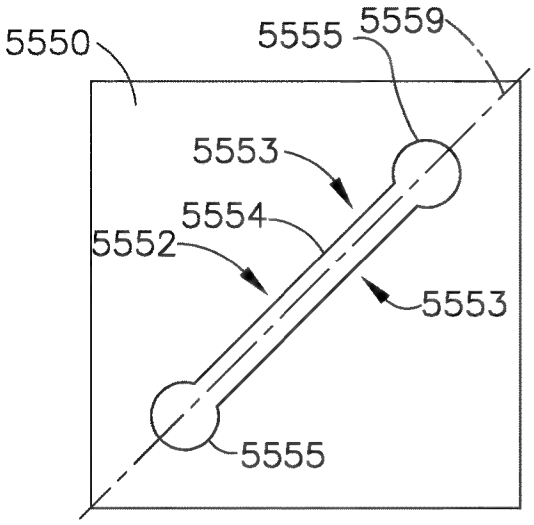

FIG. 170

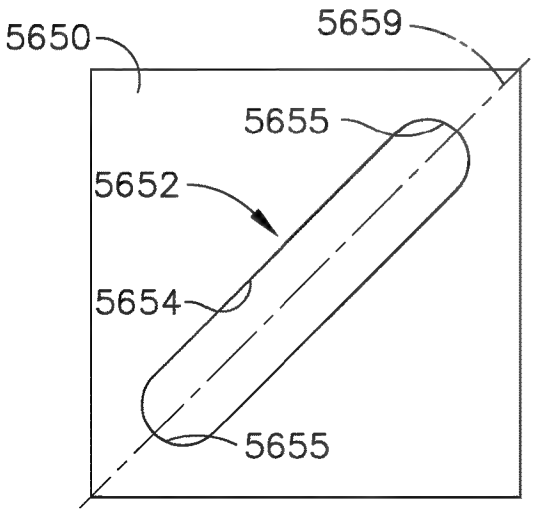

FIG. 171

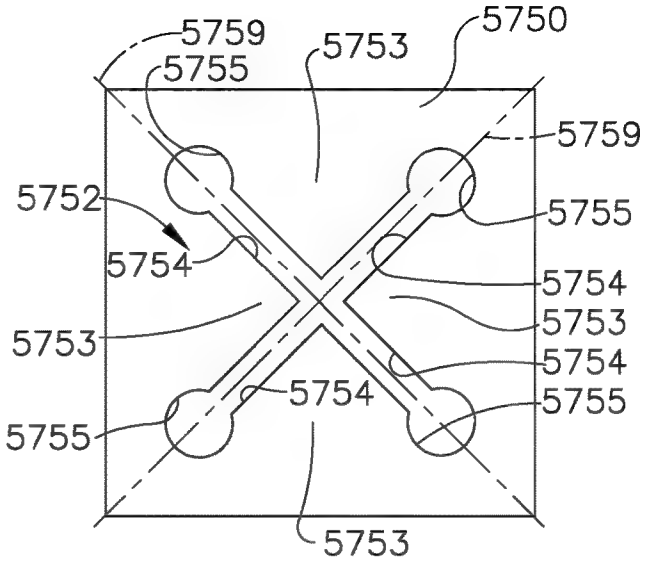

FIG. 172

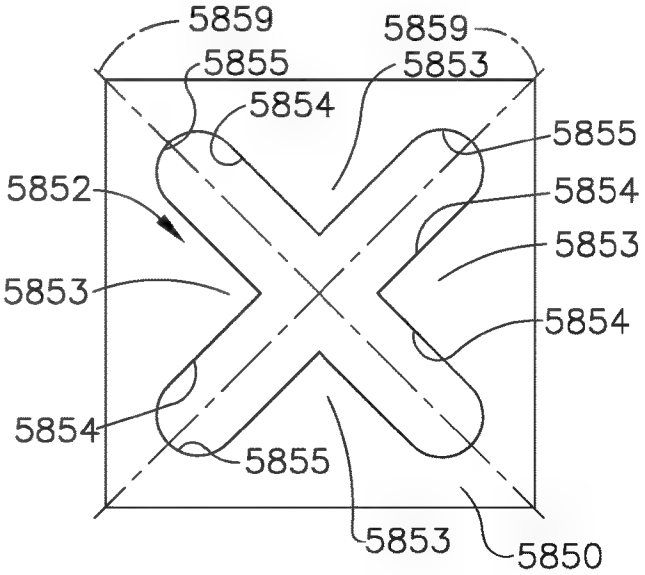

FIG. 173

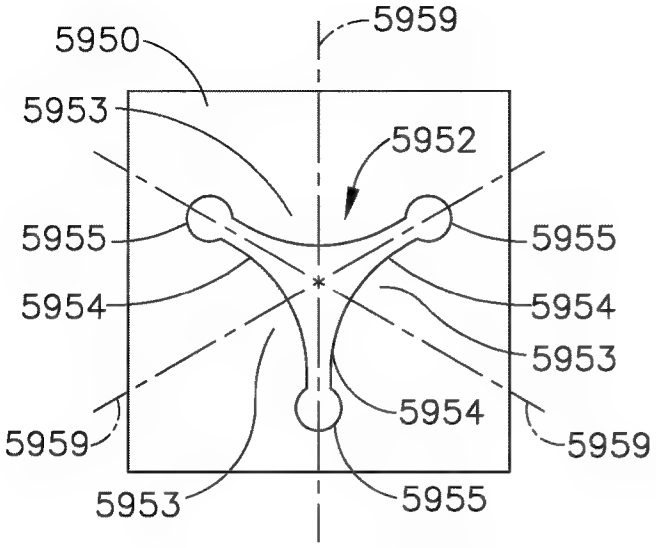

FIG. 174

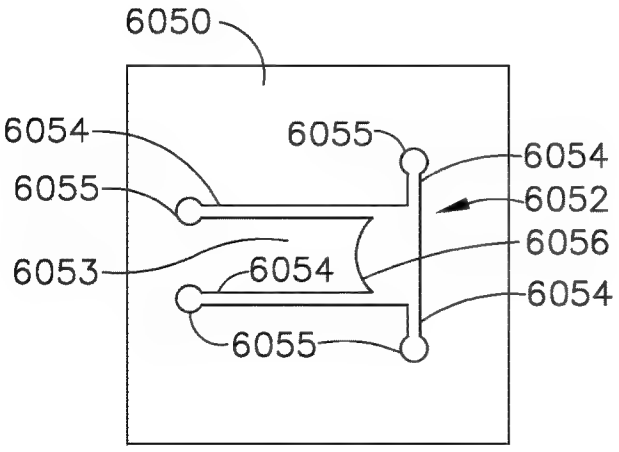

FIG. 175

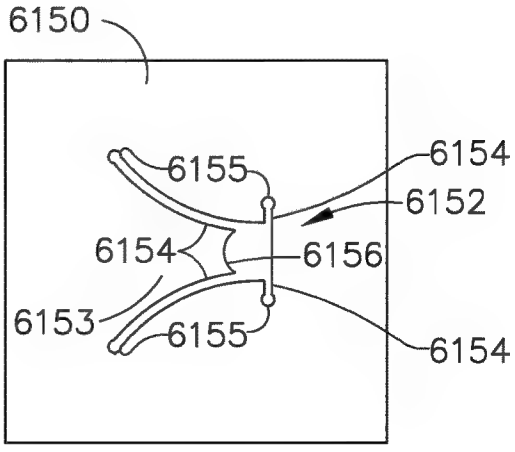

FIG. 176

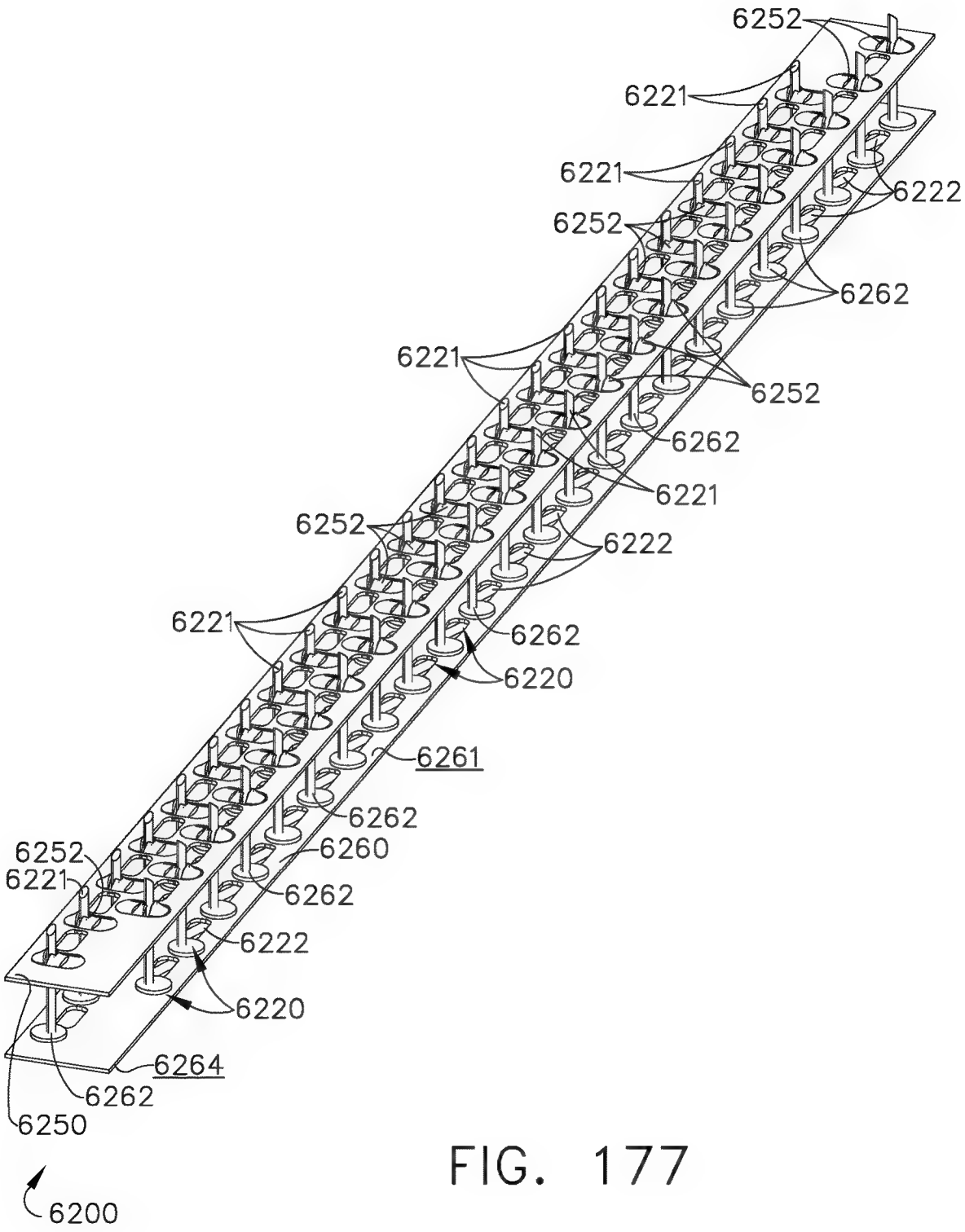
6252
6221
6221
6222
6252
6262
6221
6252
6262
6221
6252
6222
6221
6262
6220
6261
6262
6252
6260
6221
6262
6222
6220
6264
6262
6250
6200

FIG. 177

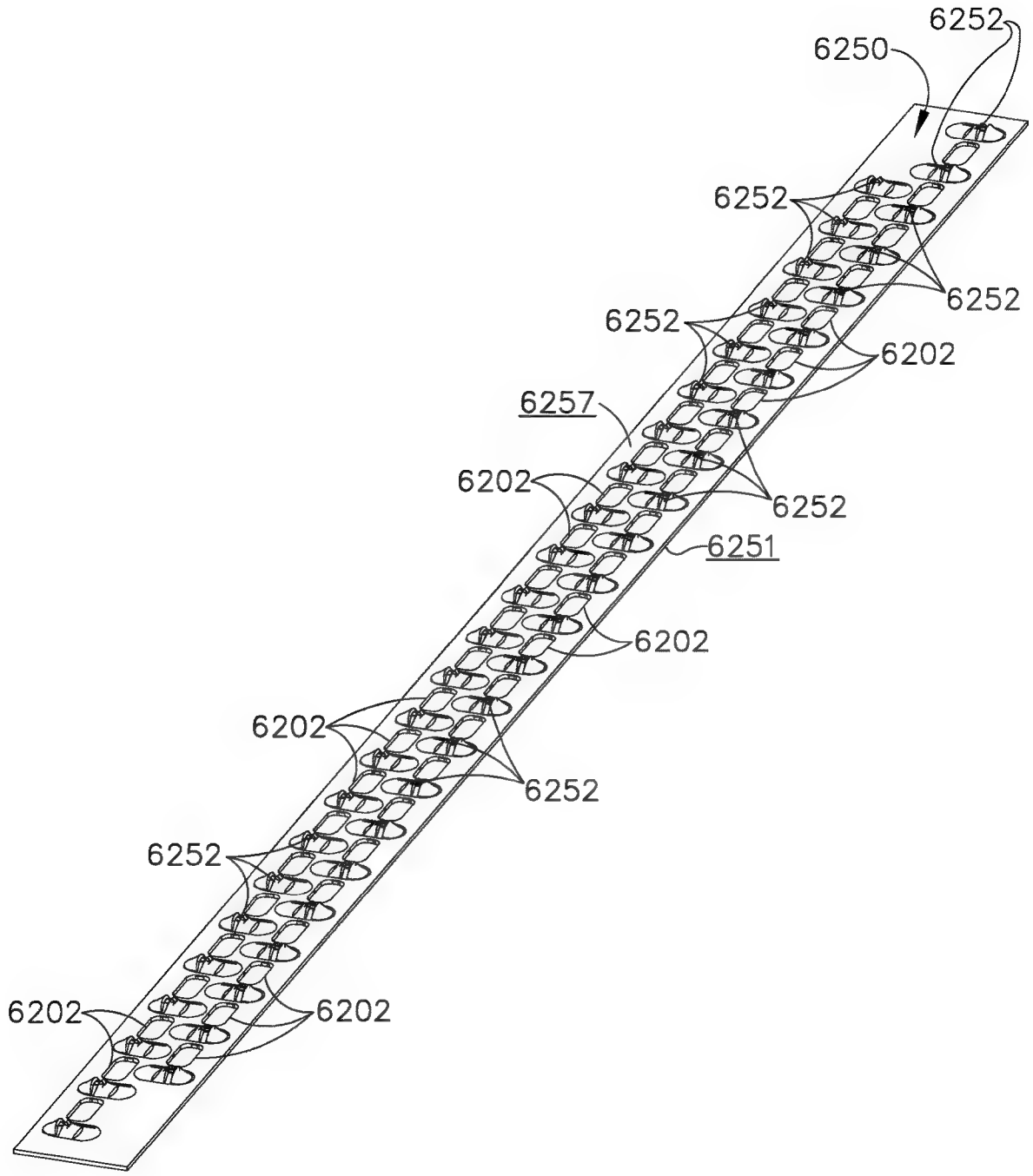
6252
6250
6252
6252
6252
6202
6257
6202
6252
6251
6202
6202
6252
6252
6202
6202

FIG. 178

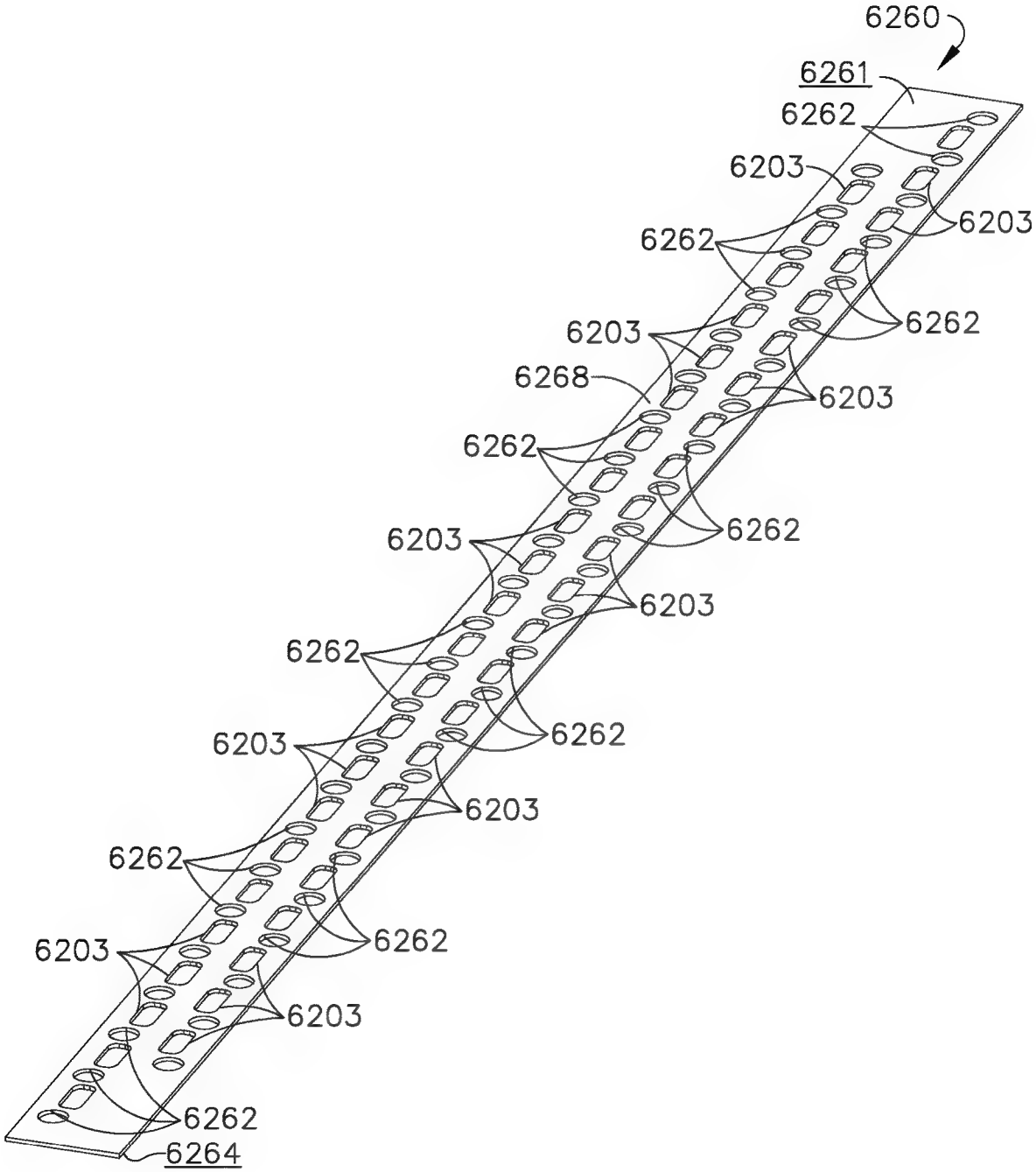
6260
6261
6262
6203
6203
6262
6262
6203
6268
6203
6262
6262
6203
6203
6262
6262
6203
6203
6262
6262
6203
6203
6262
6264

FIG. 179

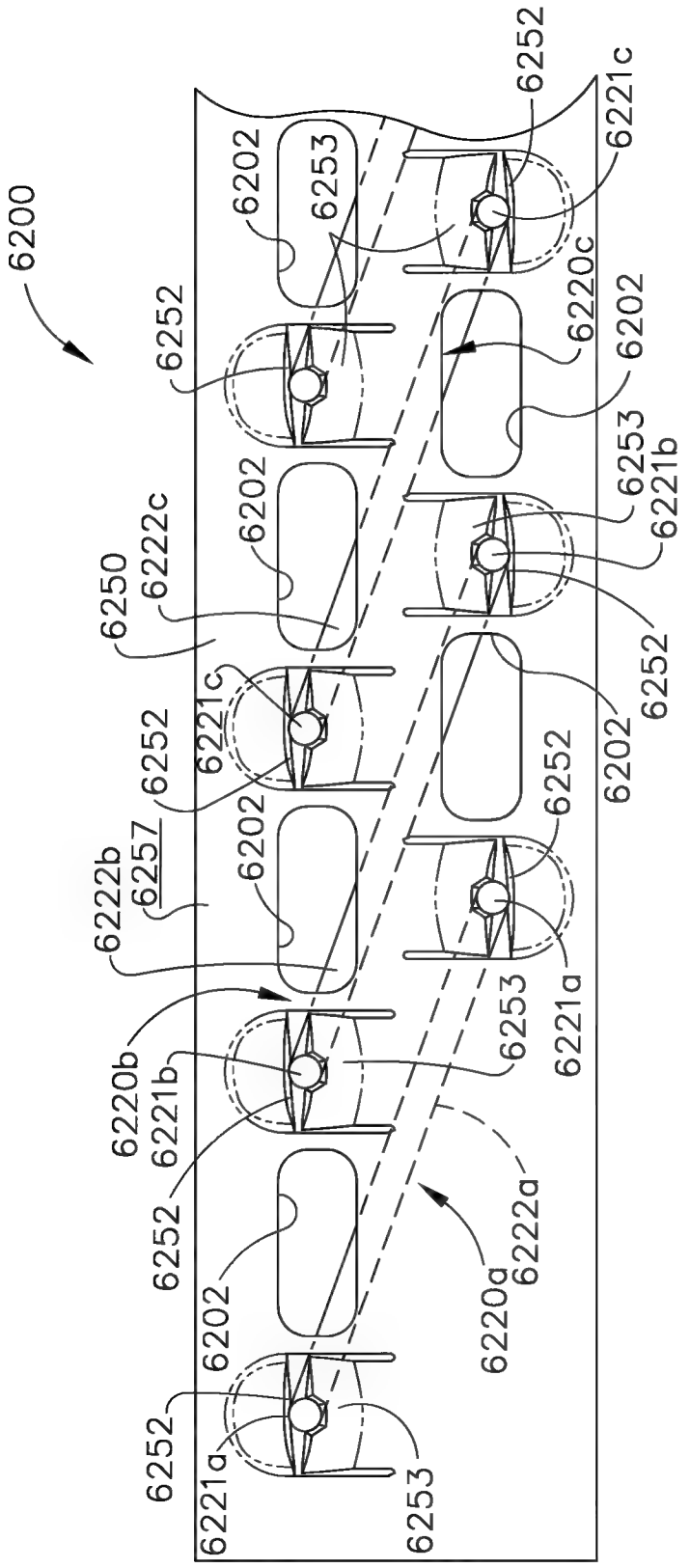
6200
6252
6221c
6202
6253
6220c
6222c
6250
6221b
6257
6222b
6220b
6221a
6222a
6220a

FIG. 180

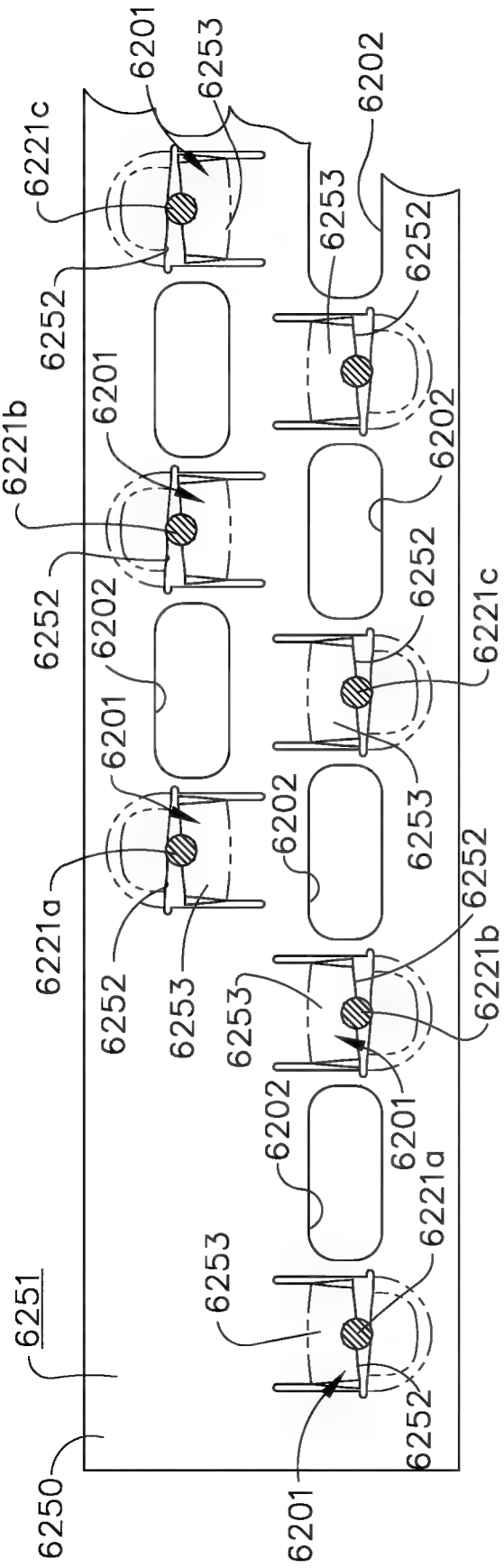
6201
6253
6202
6221c
6252
6253
6252
6201
6221b
6202
6252
6202
6252
6221c
6201
6253
6202
6221a
6252
6253
6252
6221b
6253
6201
6202
6221a
6253
6251
6252
6250
6201

FIG. 181

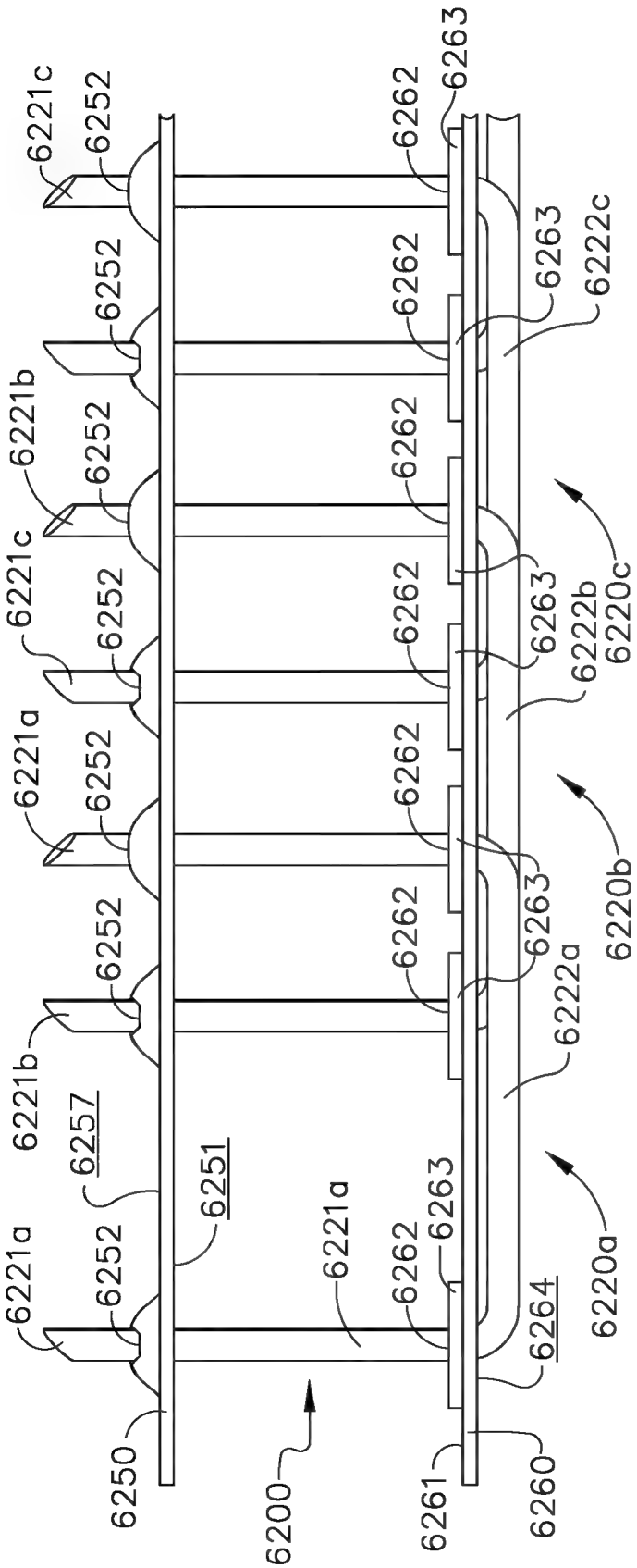
6221c
6252
6262
6263
6222c
6221b
6220c
6222b
6221a
6220b
6222a
6257
6251
6220a
6264
6250
6200
6261
6260

FIG. 182

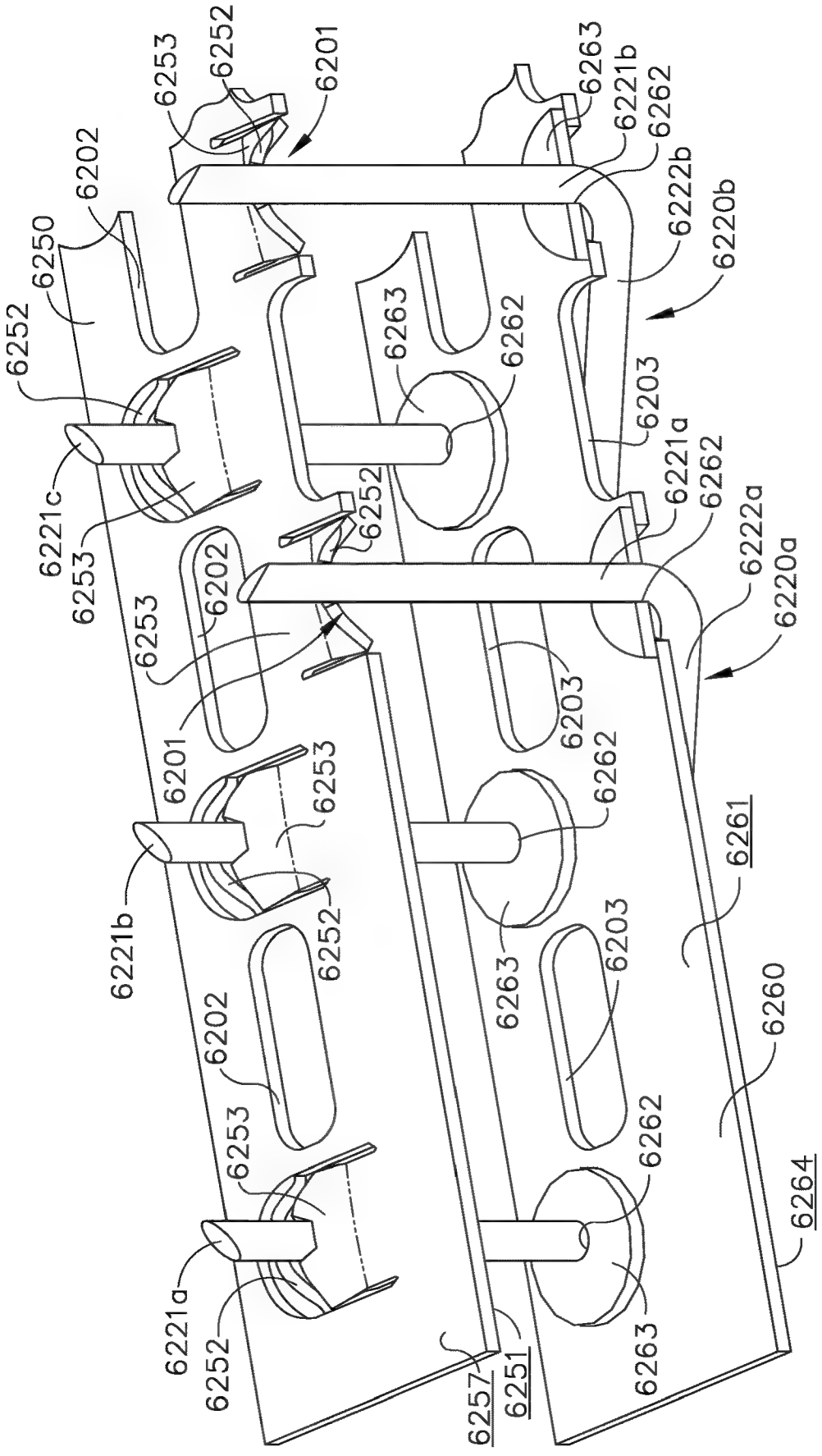
6253
6252
6201
6263
6221b
6262
6202
6222b
6250
6220b
6252
6263
6262
6203
6221a
6221c
6262
6252
6222a
6253
6202
6220a
6253
6203
6201
6262
6253
6261
6221b
6252
6263
6203
6202
6260
6253
6262
6221a
6264
6252
6263
6257
6251

FIG. 183

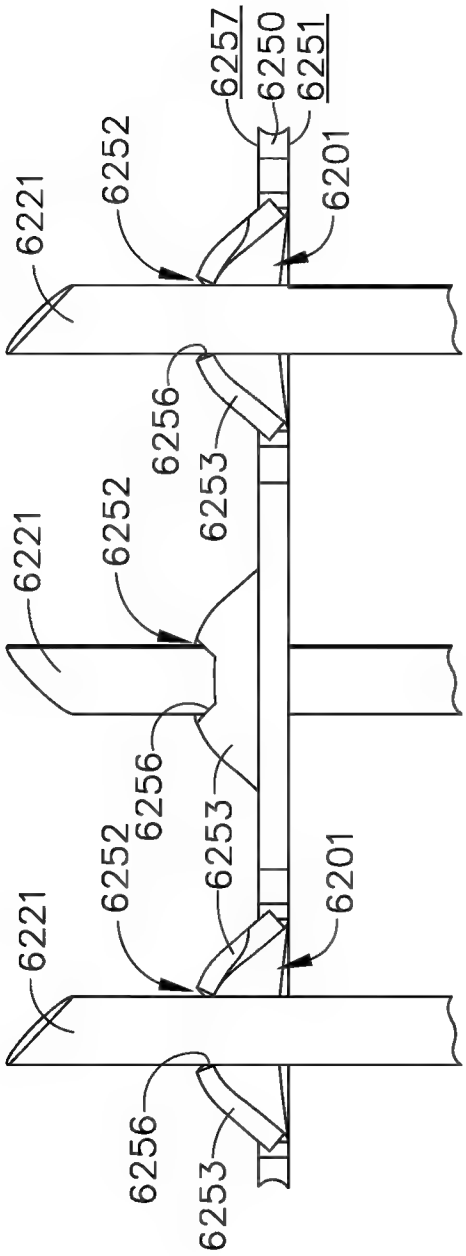
6257
6250
6251
6252
6221
6201
6256
6253
6252
6221
6256
6253
6252
6201
6221
6256
6253

FIG. 184

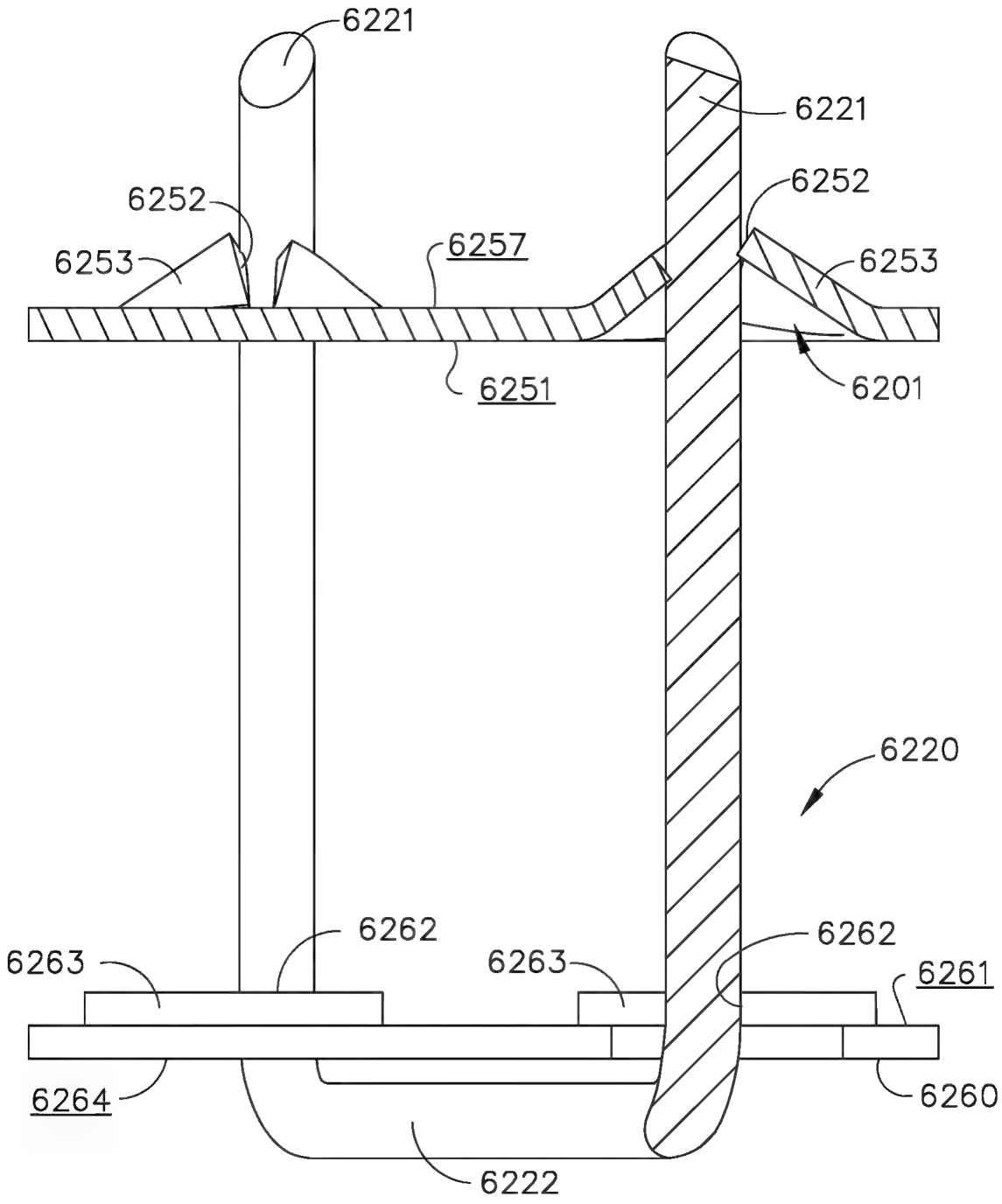
6221
6221
6252
6252
6253
6257
6253
6251
6201
6220
6262
6263
6263
6262
6261
6264
6260
6222

FIG. 185

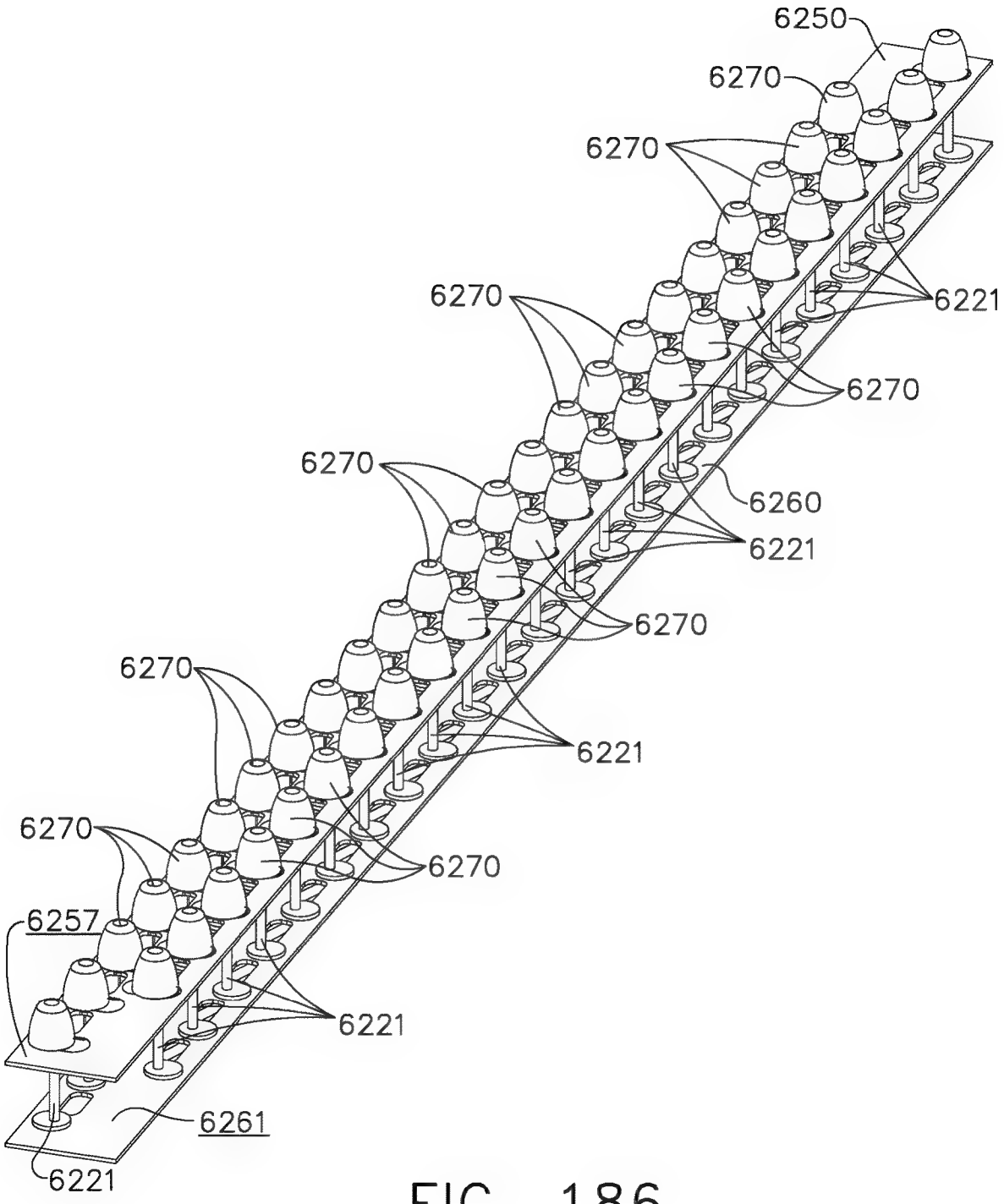
6250
6270
6270
6270
6221
6270
6270
6260
6221
6270
6270
6221
6270
6270
6257
6221
6261
6221

FIG. 186

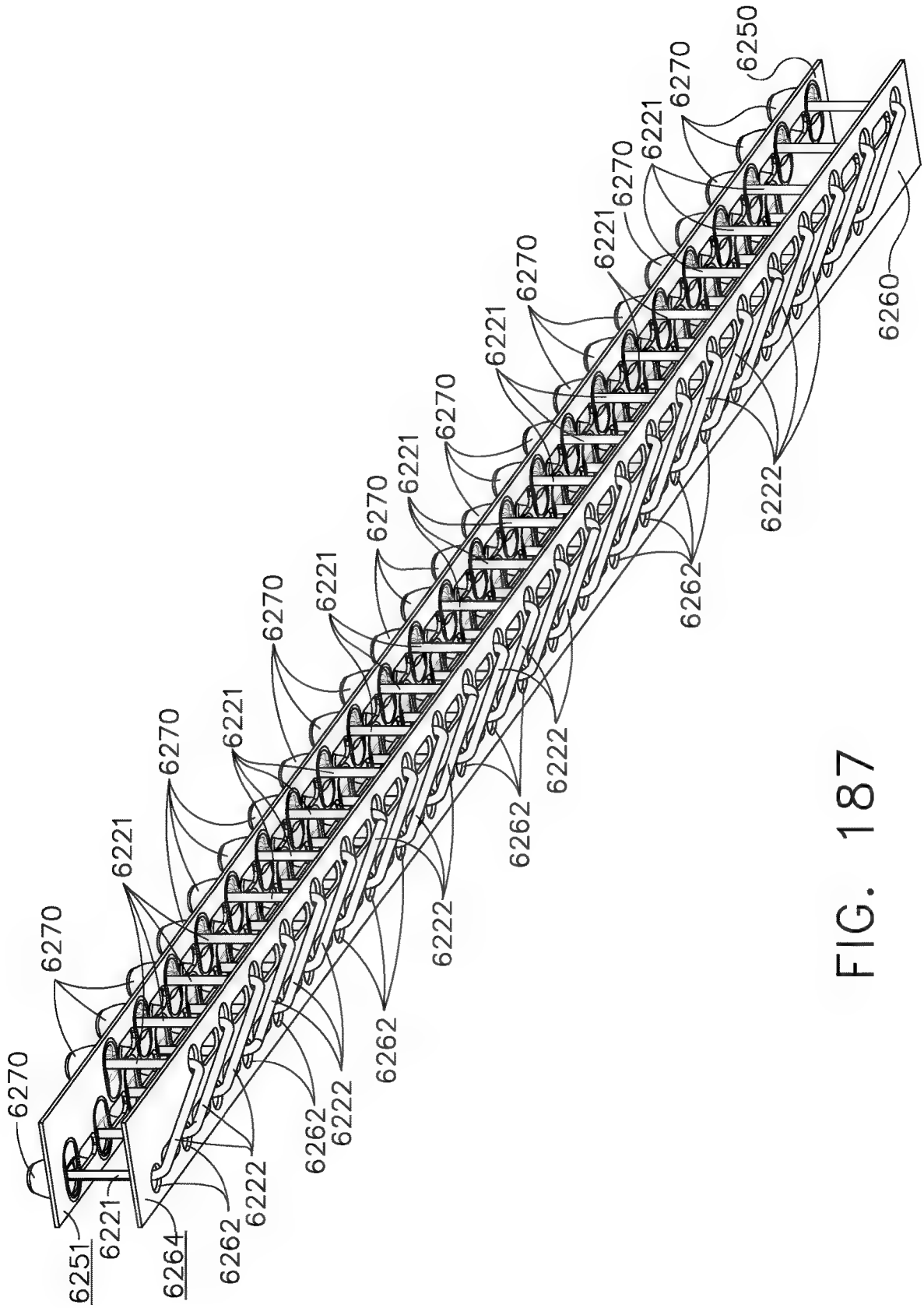

FIG. 187

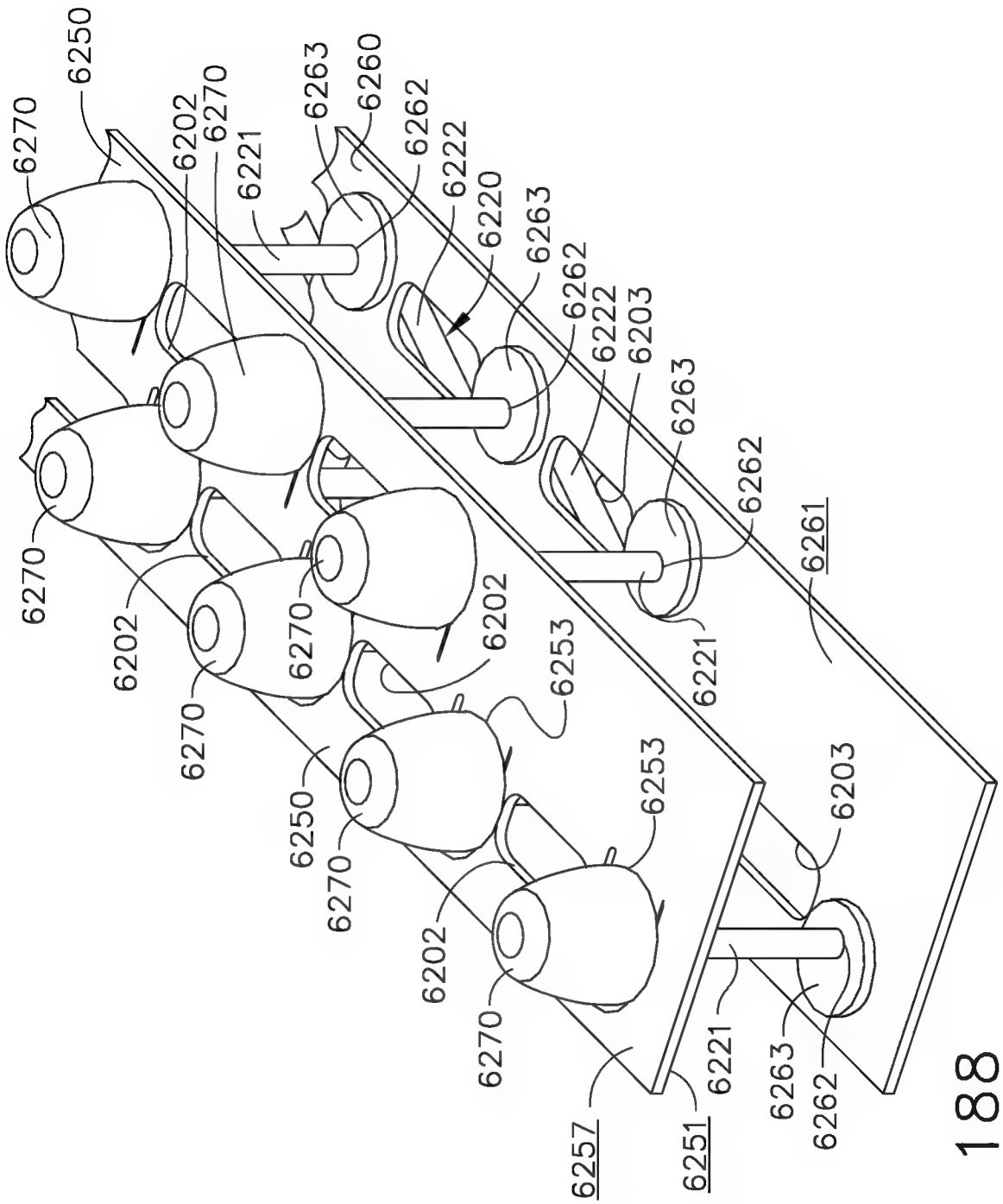
6250
6270
6202
6270
6221
6263
6260
6262
6222
6220
6263
6262
6222
6203
6263
6262
6261
6221
6253
6203
6257
6251
6221
6263
6262

FIG. 188

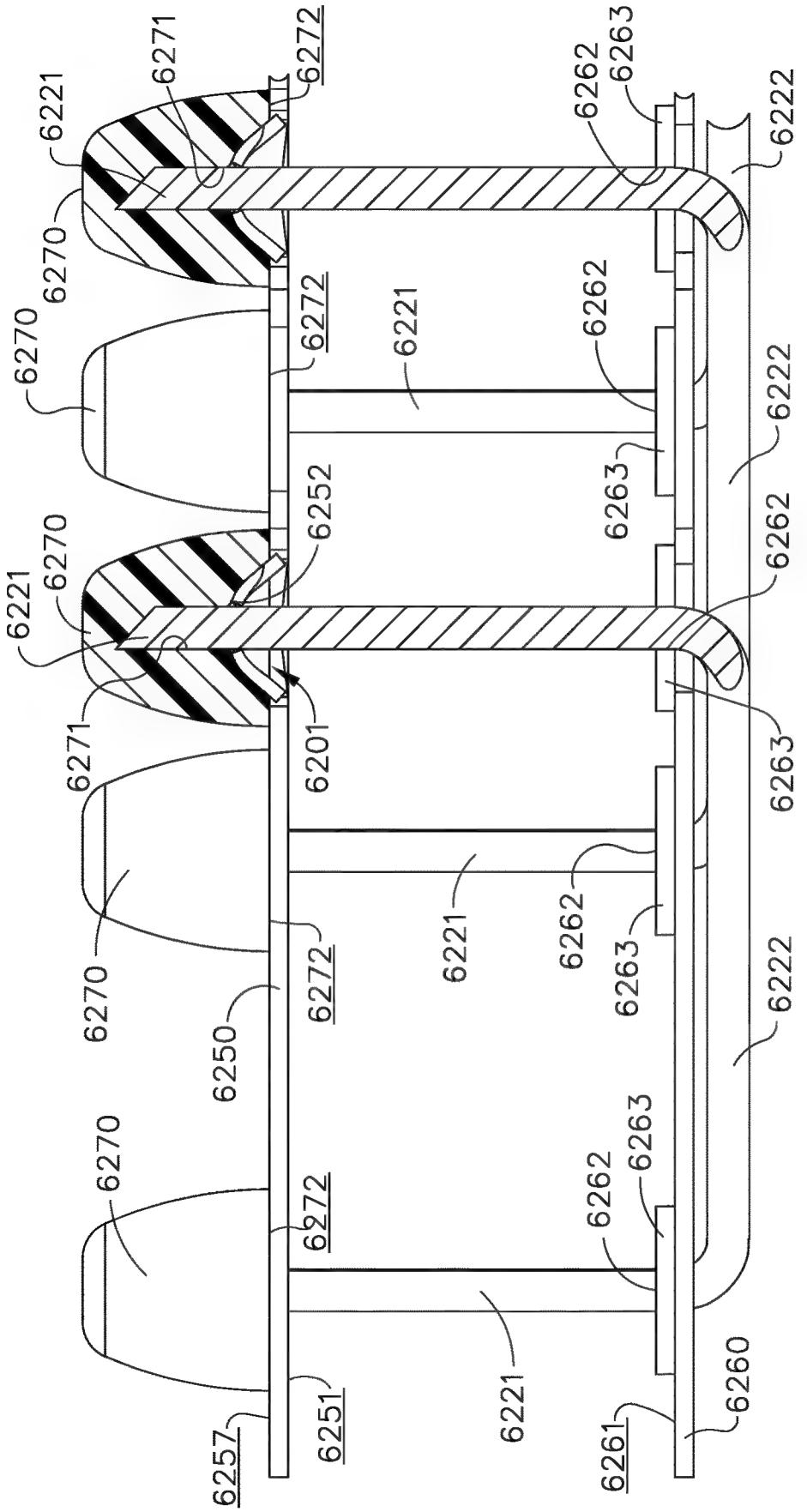
6221
6271
6272
6262
6263
6222
6270
6272
6221
6262
6270
6222
6263
6252
6270
6262
6221
6271
6201
6263
6270
6221
6262
6272
6263
6222
6250
6270
6263
6262
6272
6221
6260
6257
6251
6261

FIG. 189

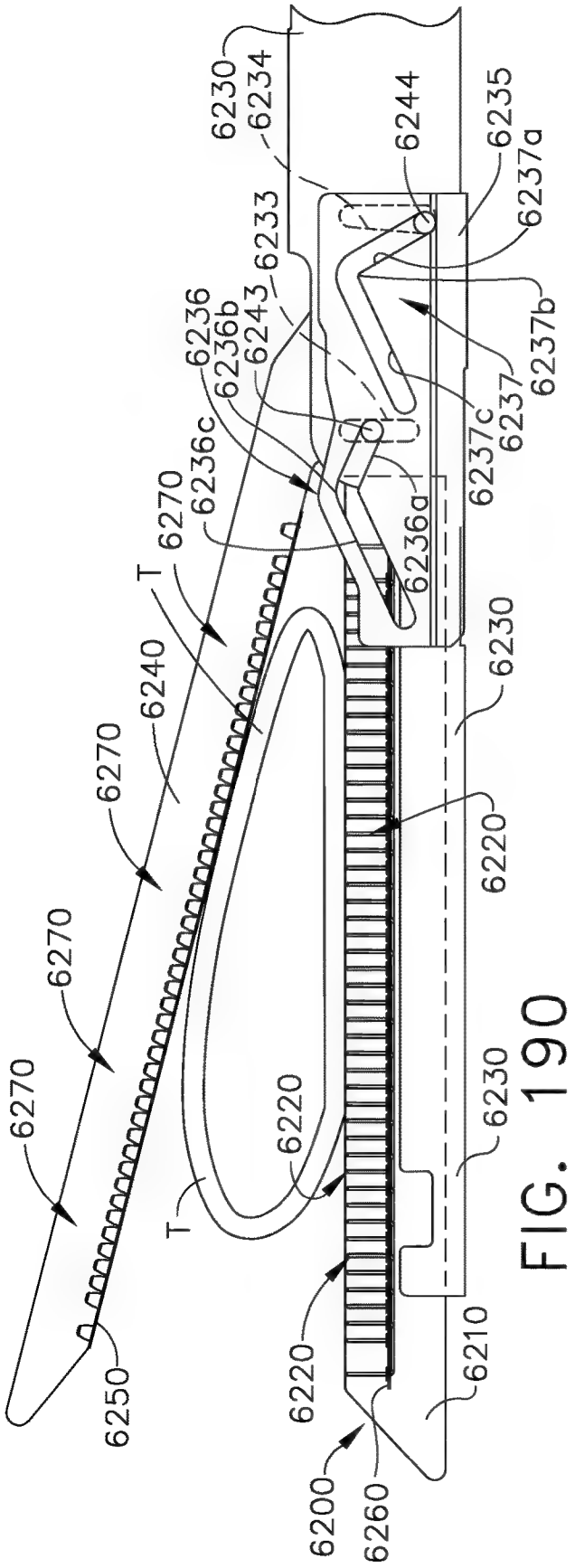

FIG. 190

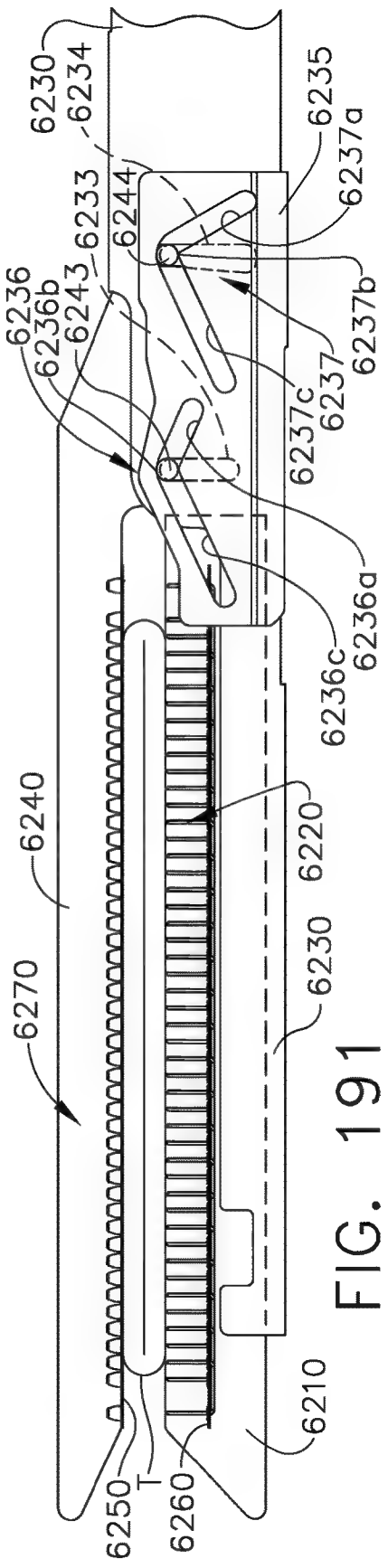

FIG. 191

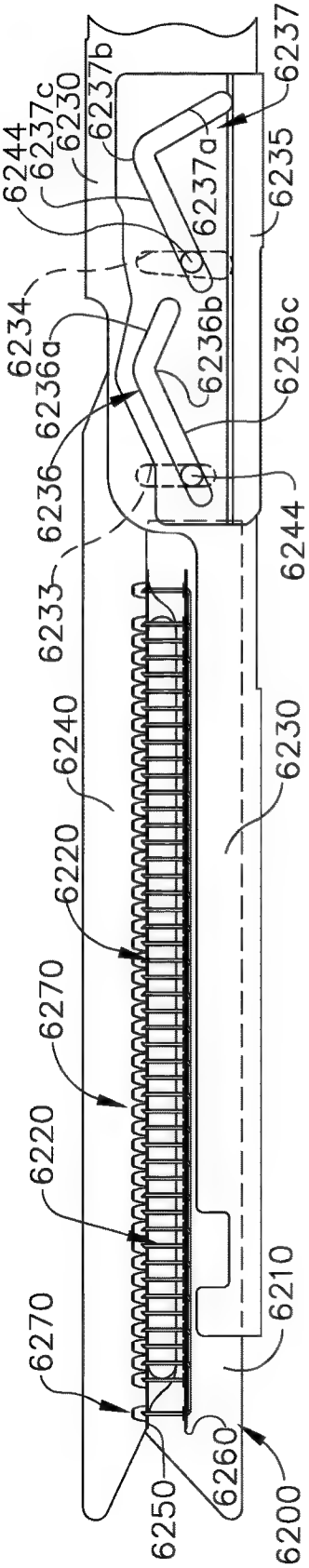

FIG. 192

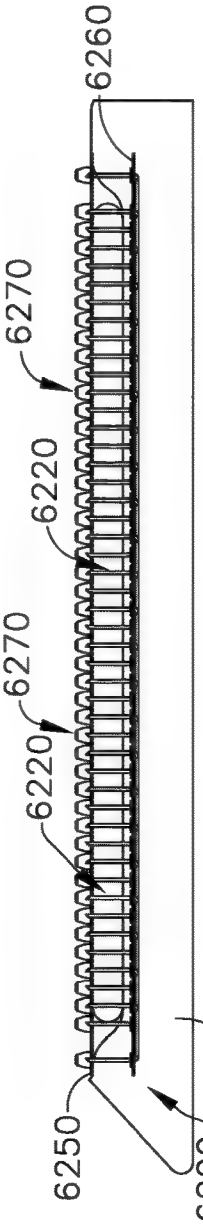

FIG. 193

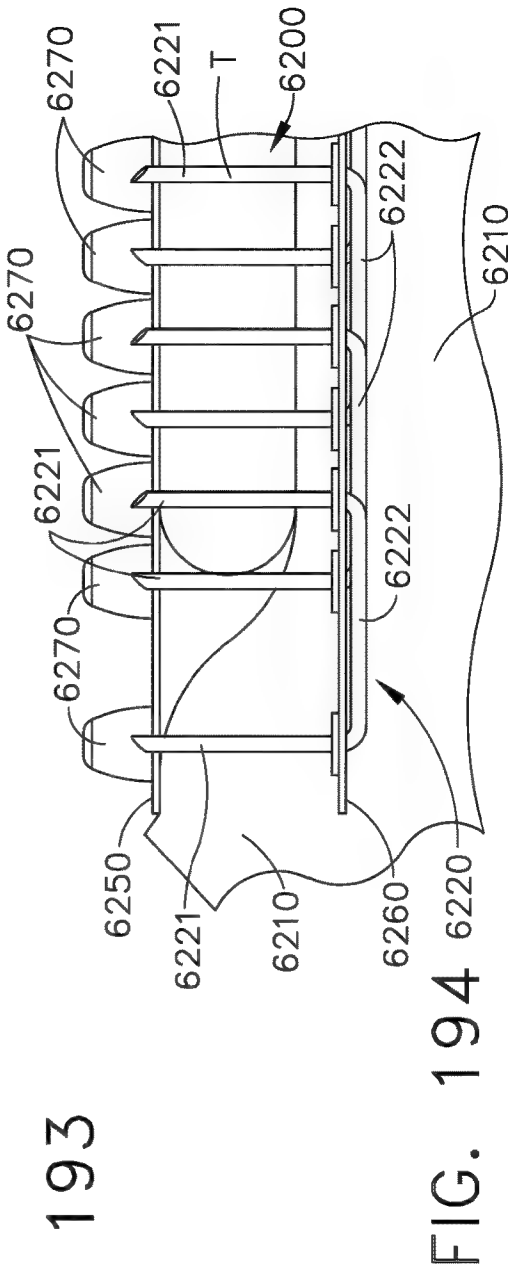

FIG. 194

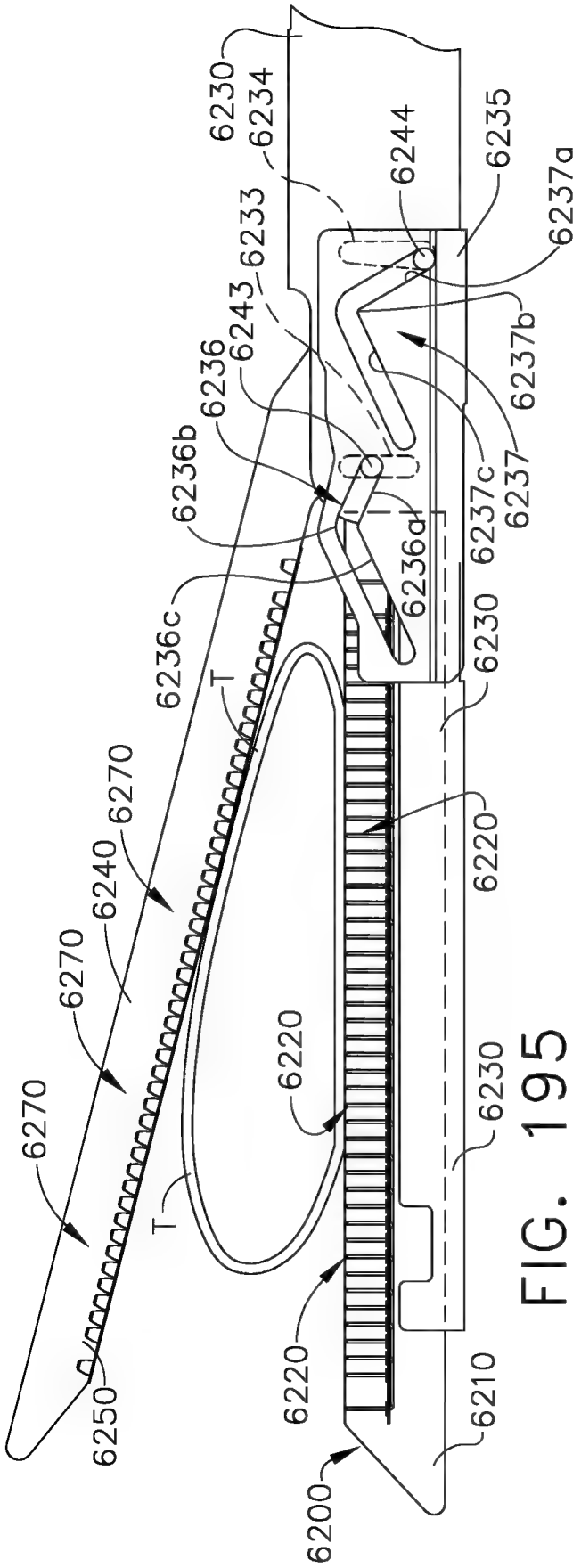

FIG. 195

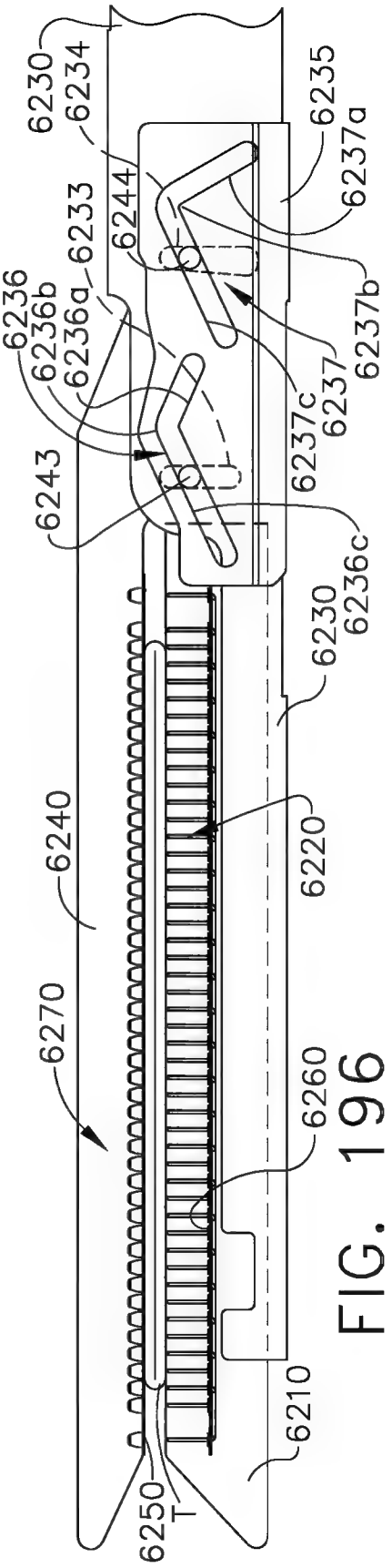

FIG. 196

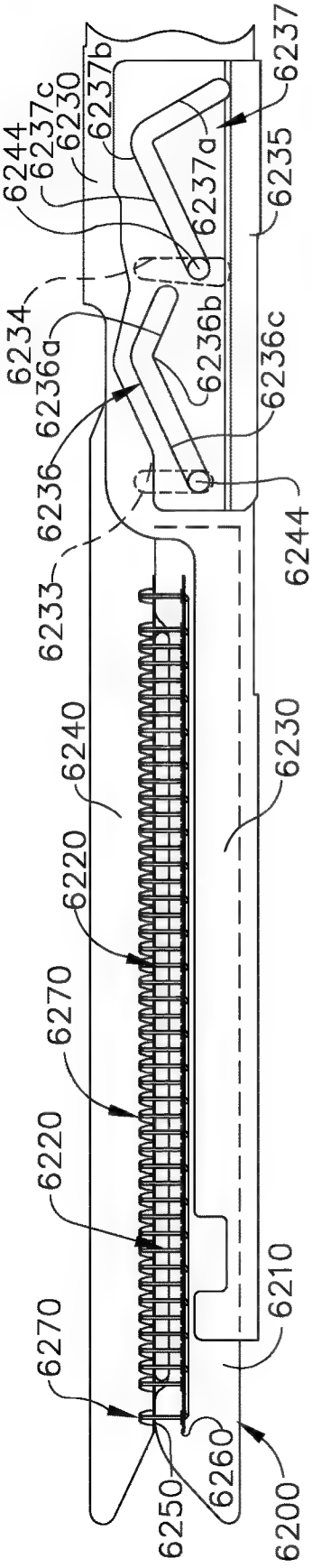

FIG. 197

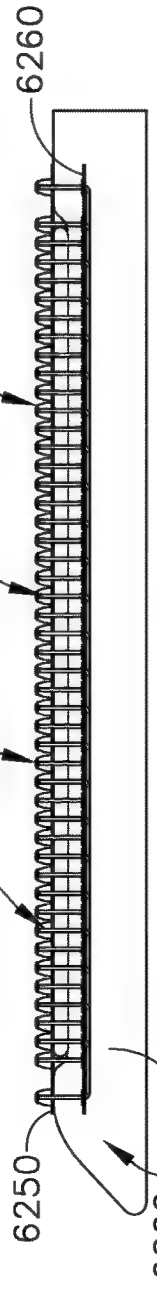

FIG. 198

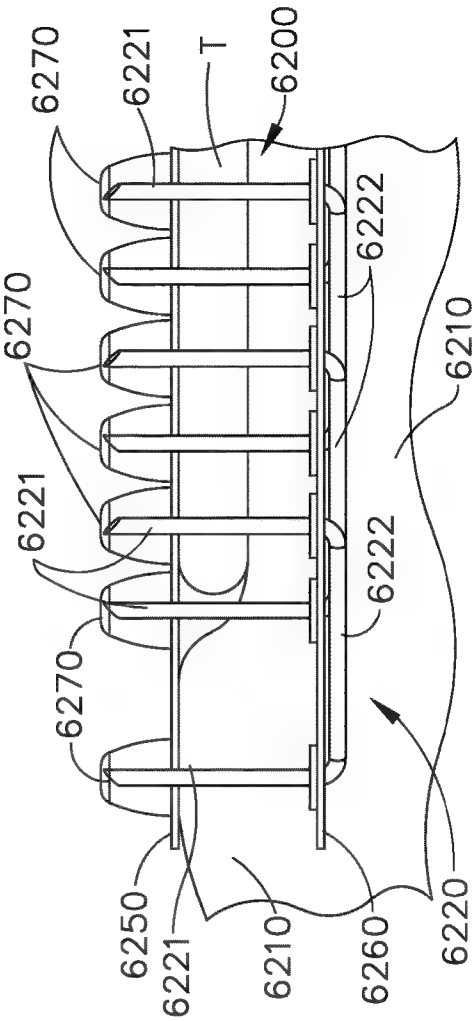

FIG. 199

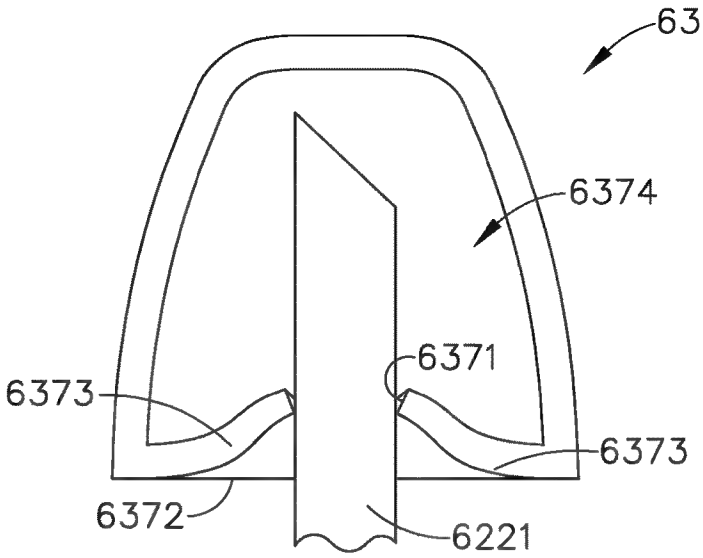

FIG. 200

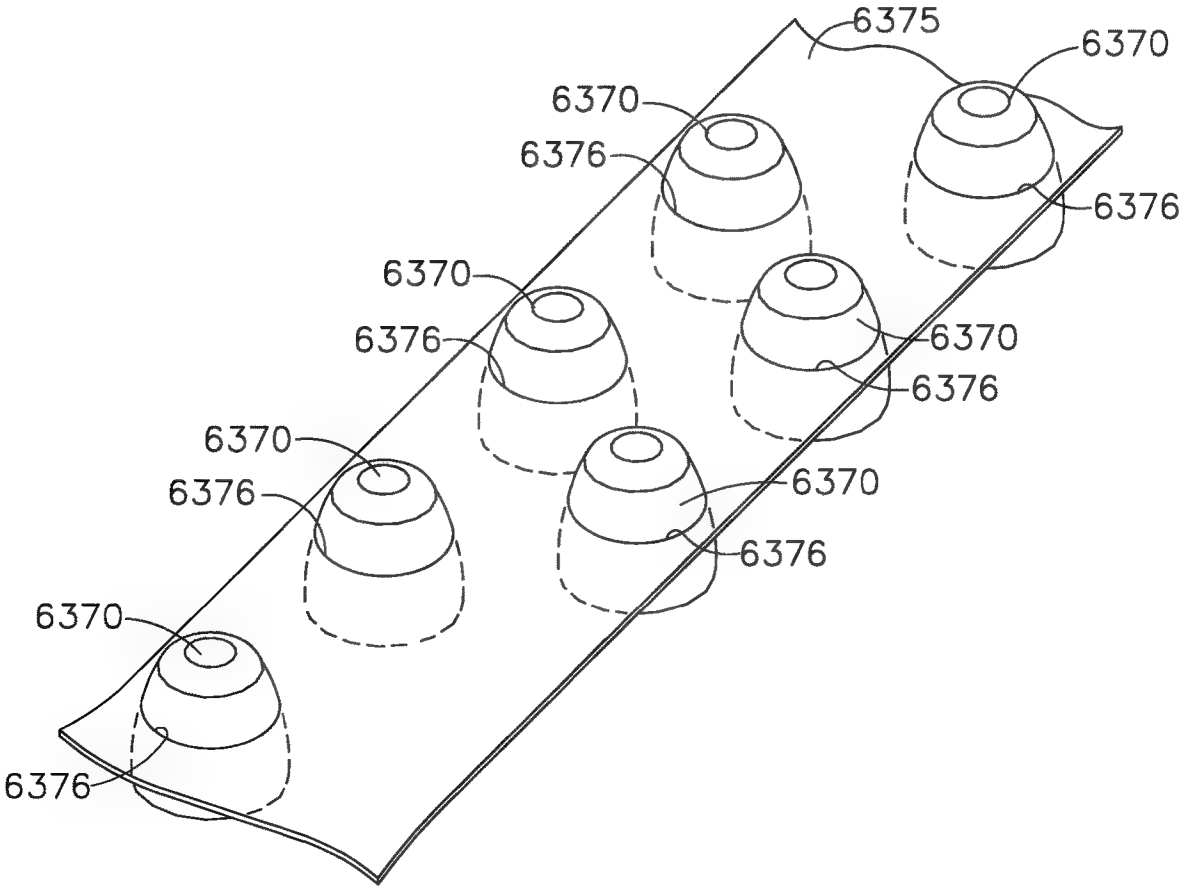

FIG. 201

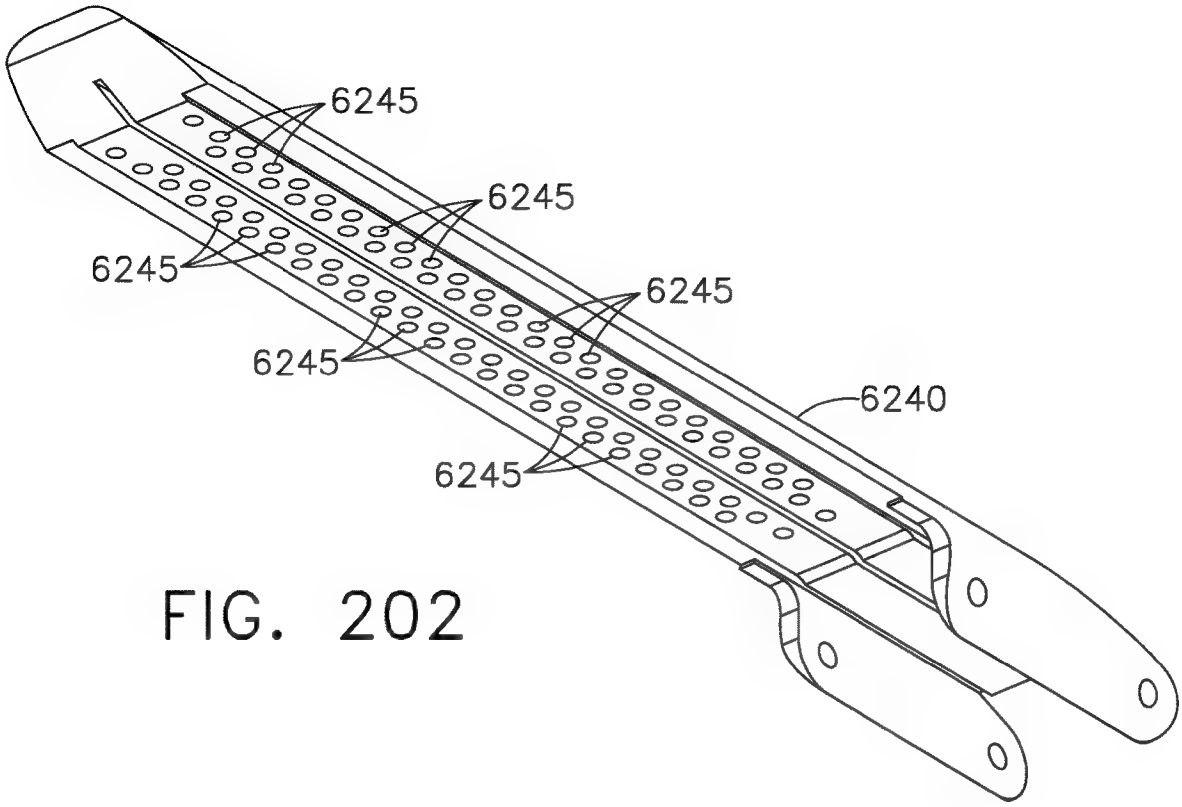

FIG. 202

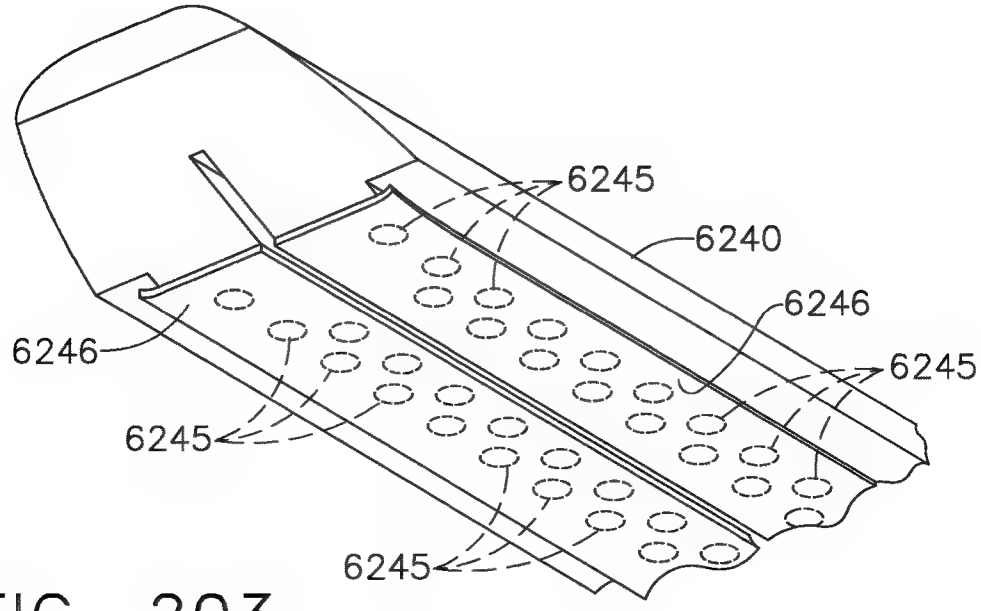

FIG. 203

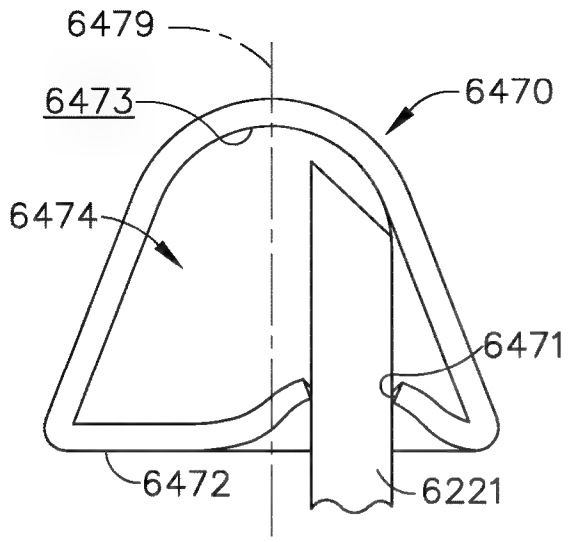

FIG. 204

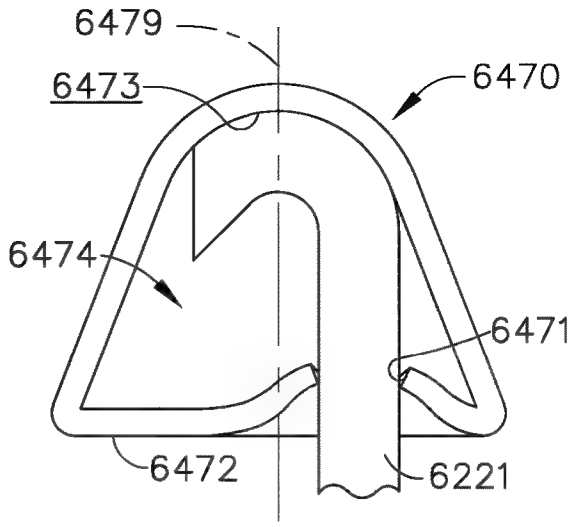

FIG. 205

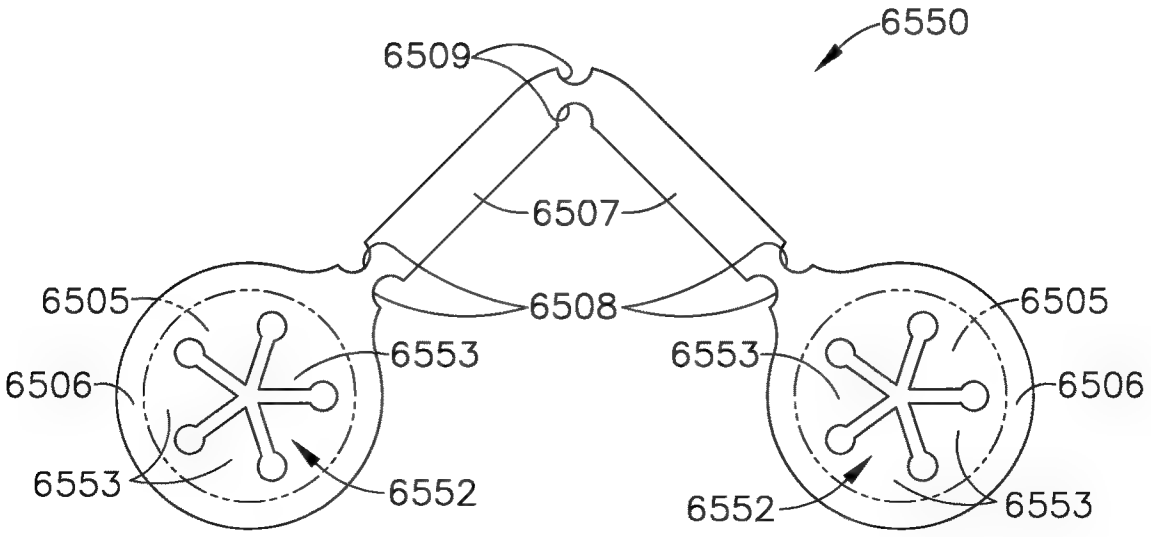

FIG. 206

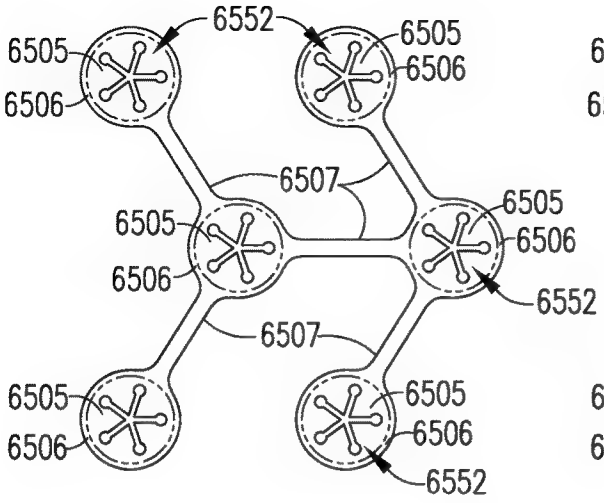

FIG. 207

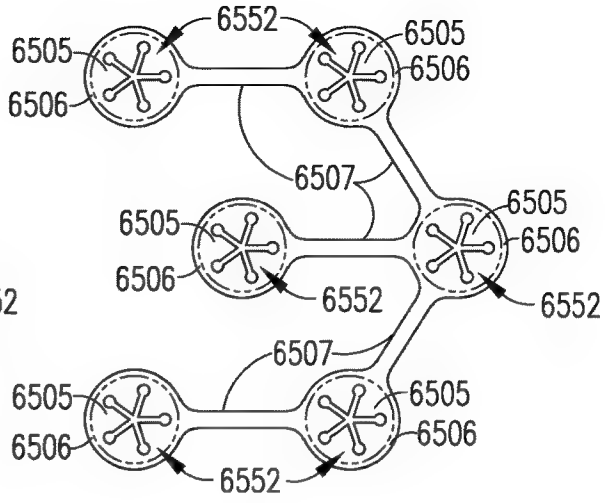

FIG. 208

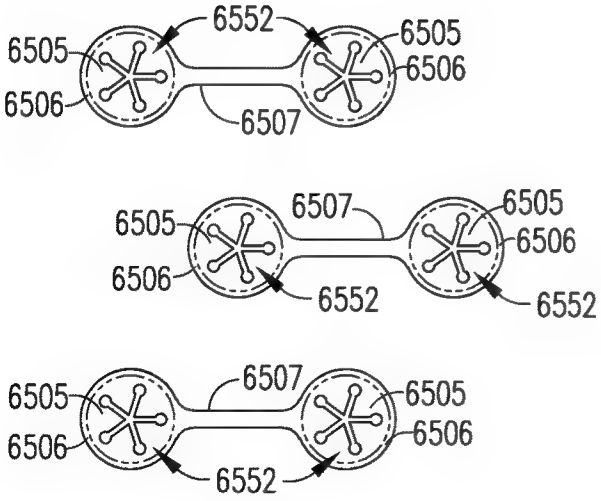

FIG. 209

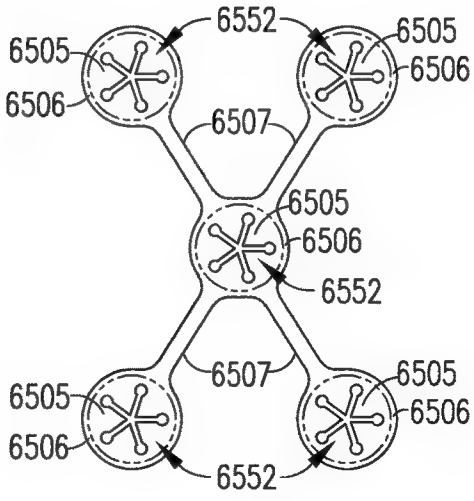

FIG. 210

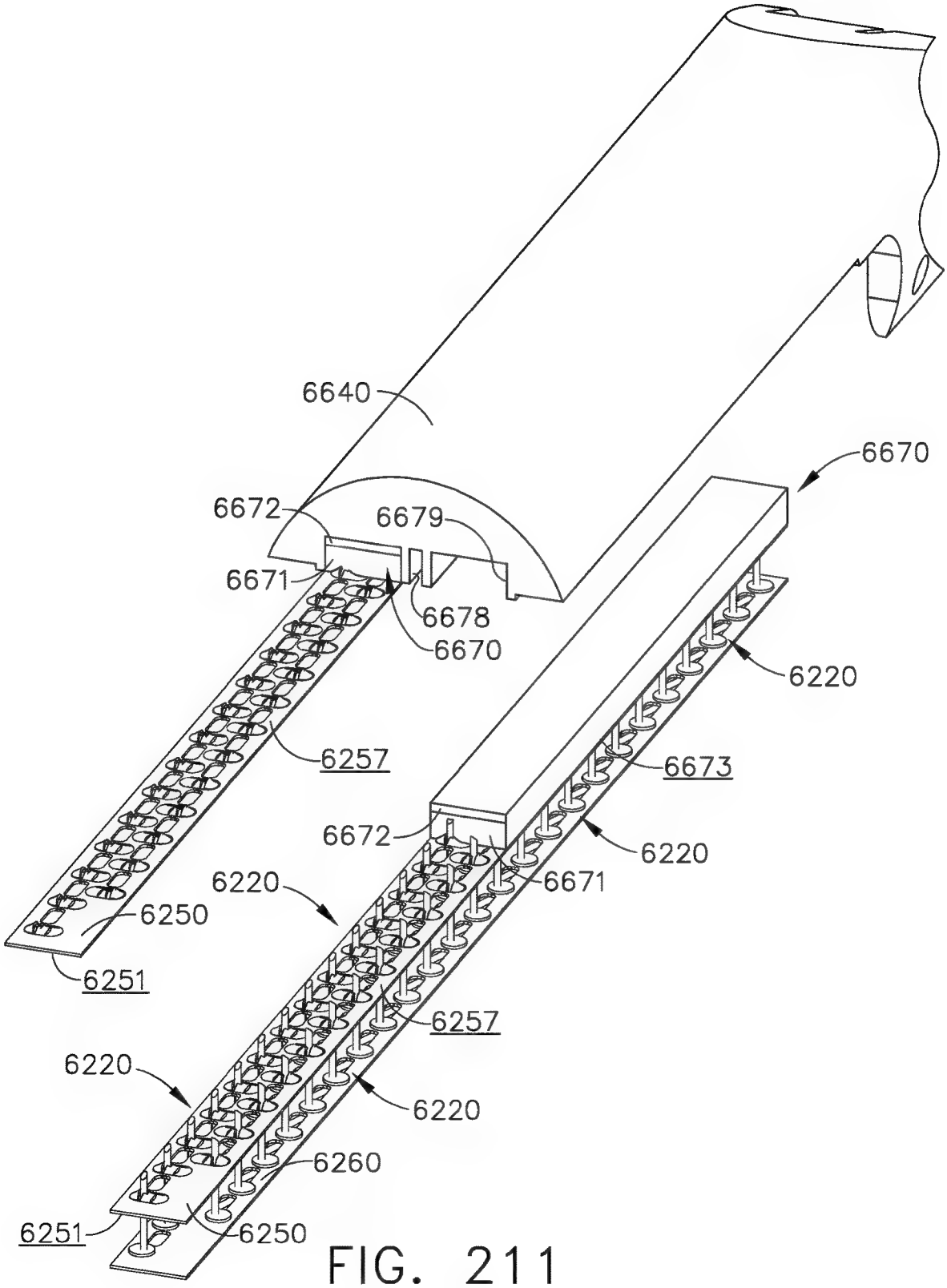
6640
6670
6672
6679
6671
6678
6670
6220
6257
6673
6672
6220
6220
6671
6250
6251
6257
6220
6220
6260
6251
6250

FIG. 211

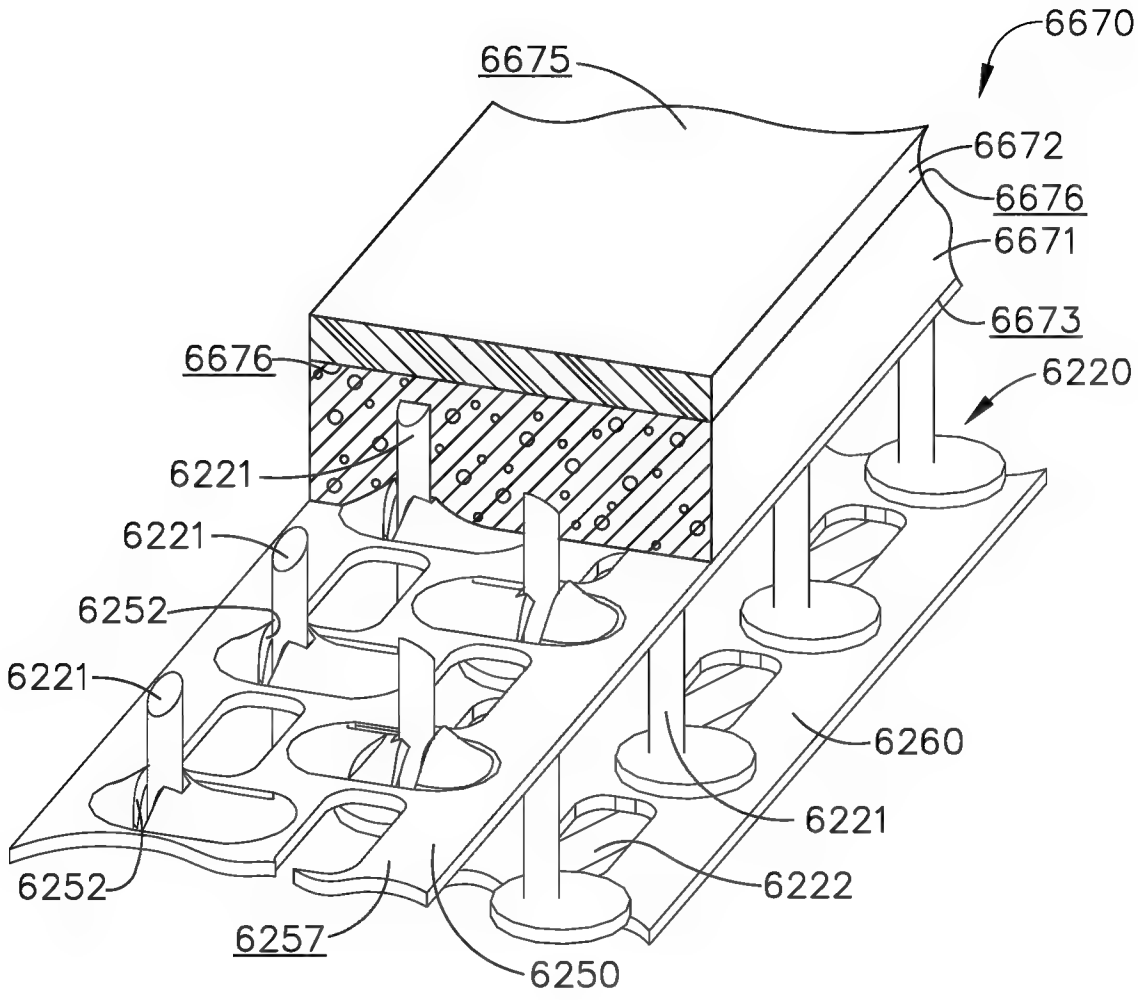
6670
6675
6672
6676
6671
6673
6676
6220
6221
6221
6252
6221
6260
6221
6222
6252
6257
6250

FIG. 212

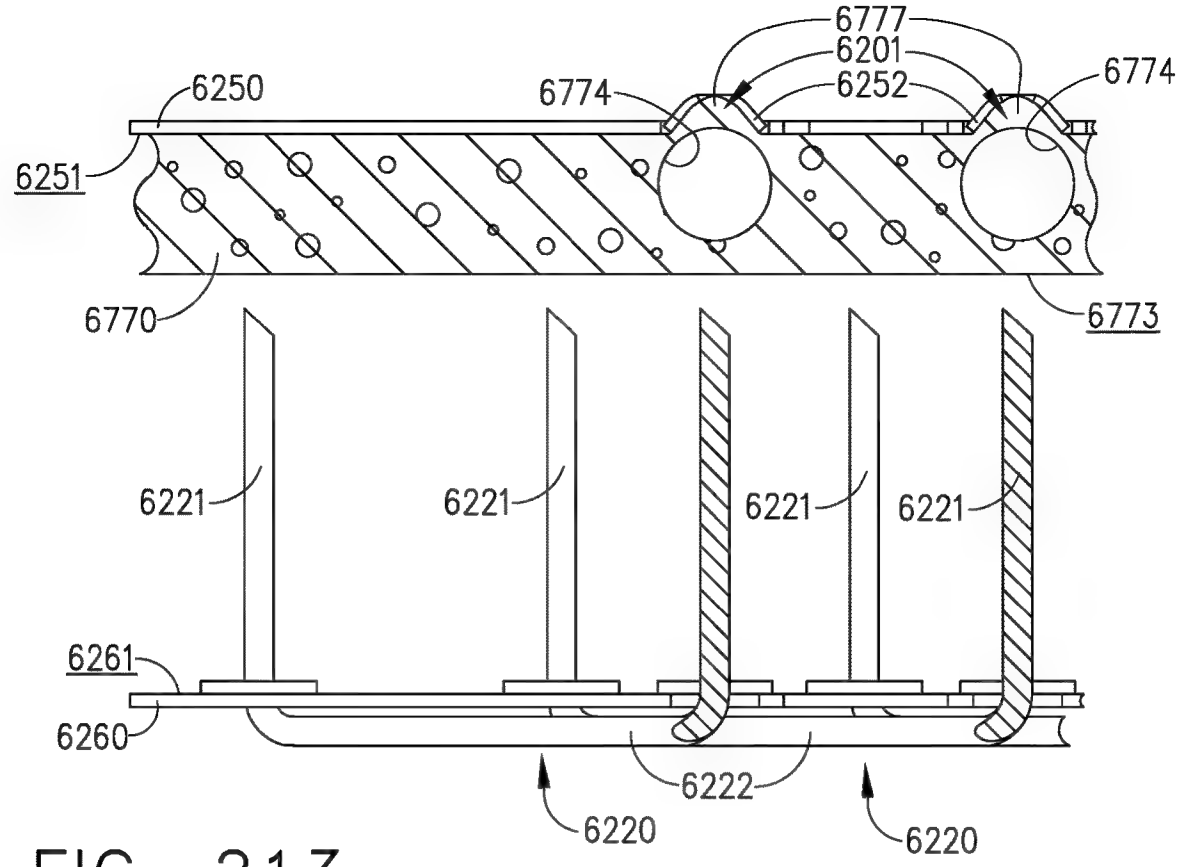

FIG. 213

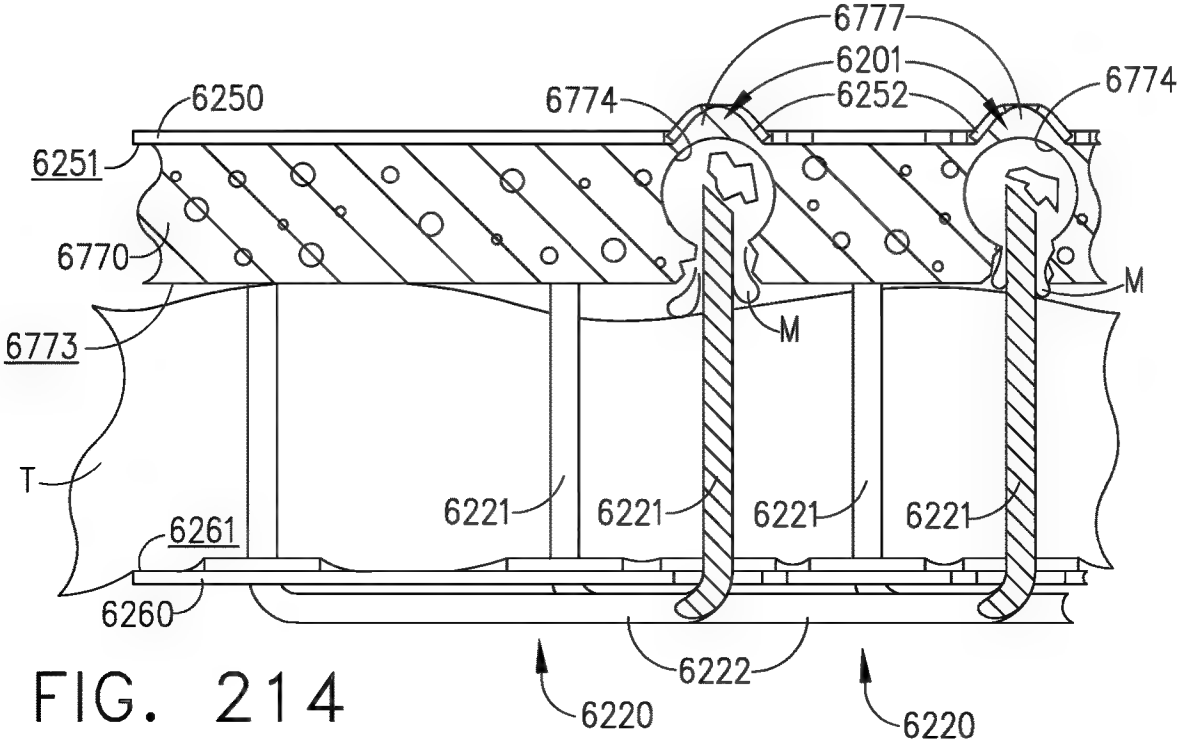

FIG. 214

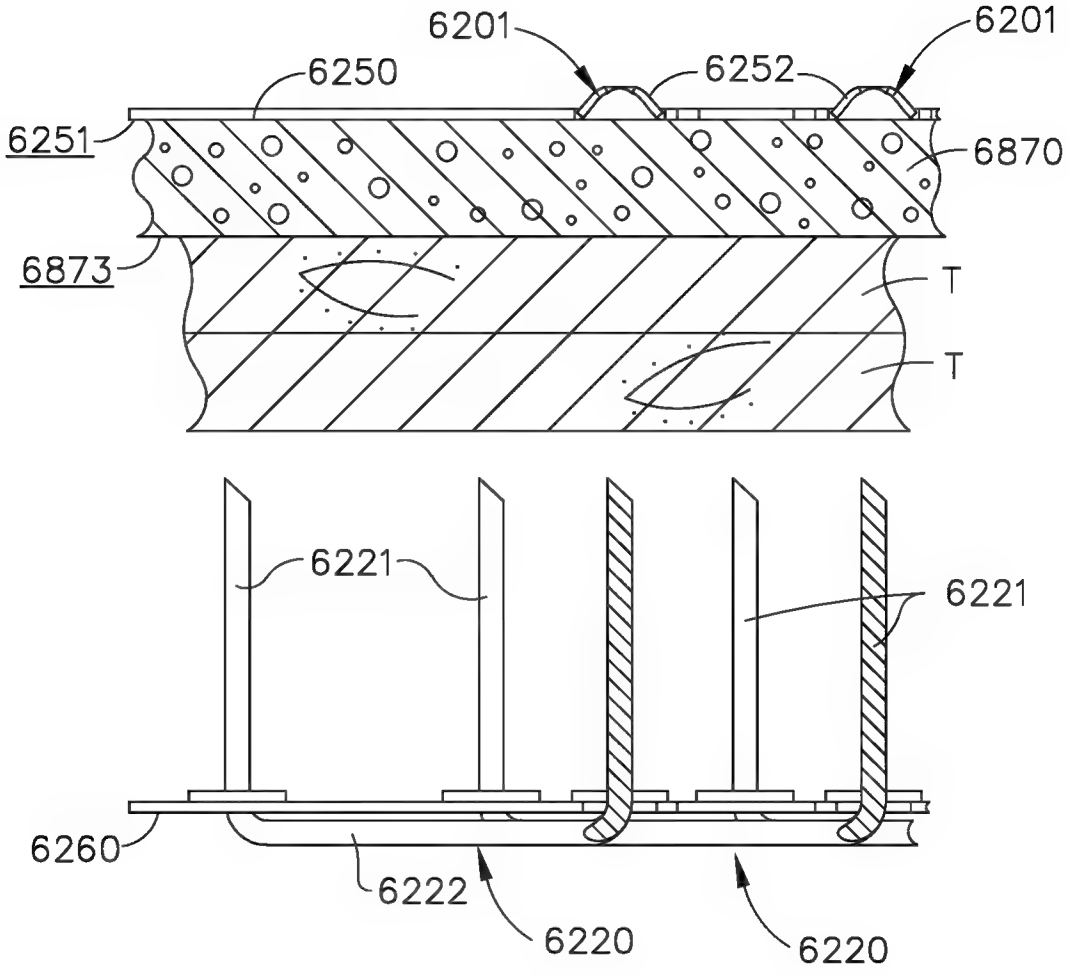
6201
6201
6250
6252
6251
6870
6873
T
T
6221
6221
6260
6222
6220
6220

FIG. 215

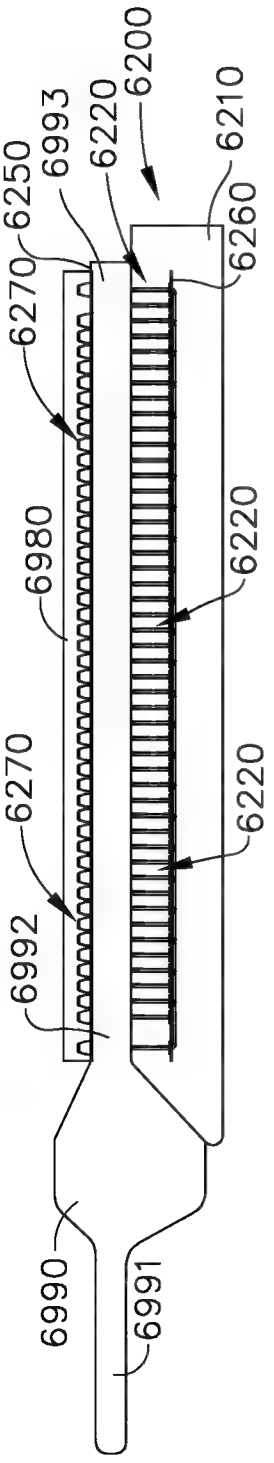

FIG. 216

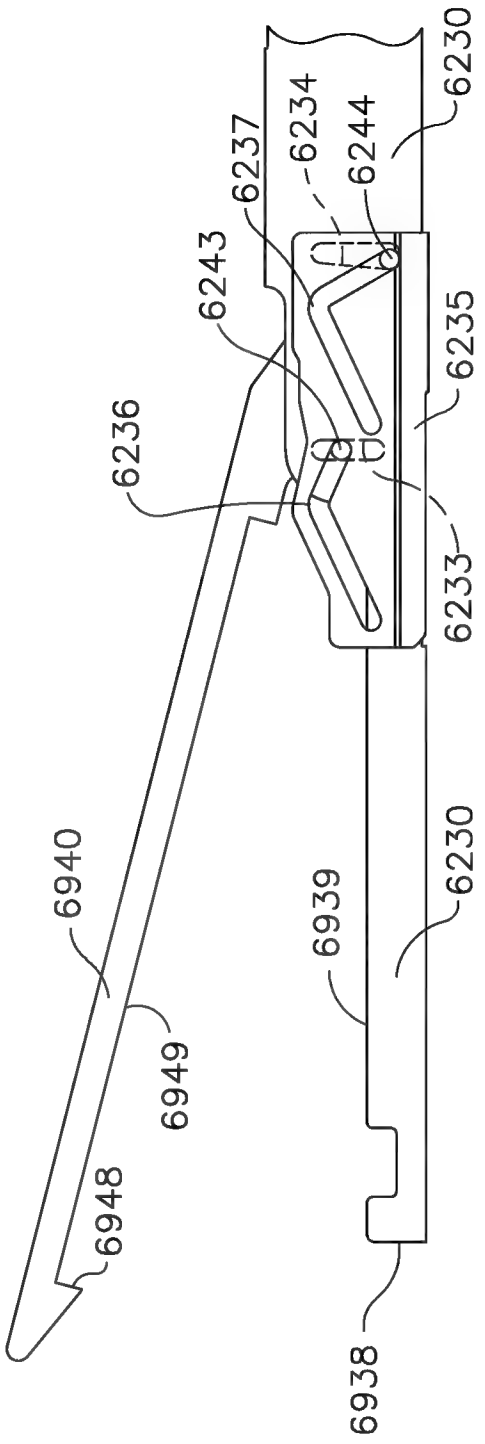

FIG. 217

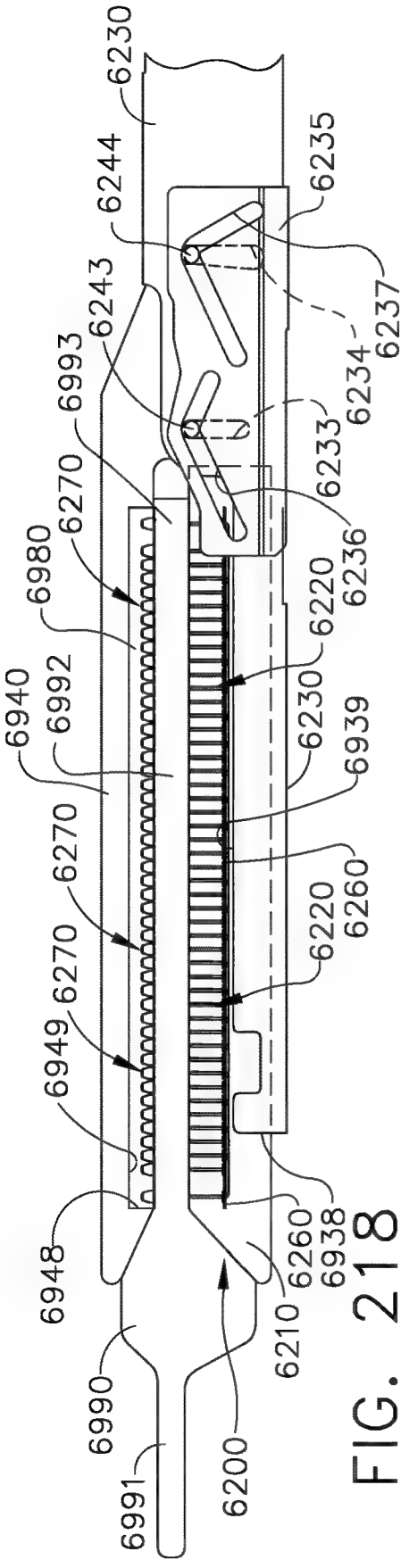

FIG. 218

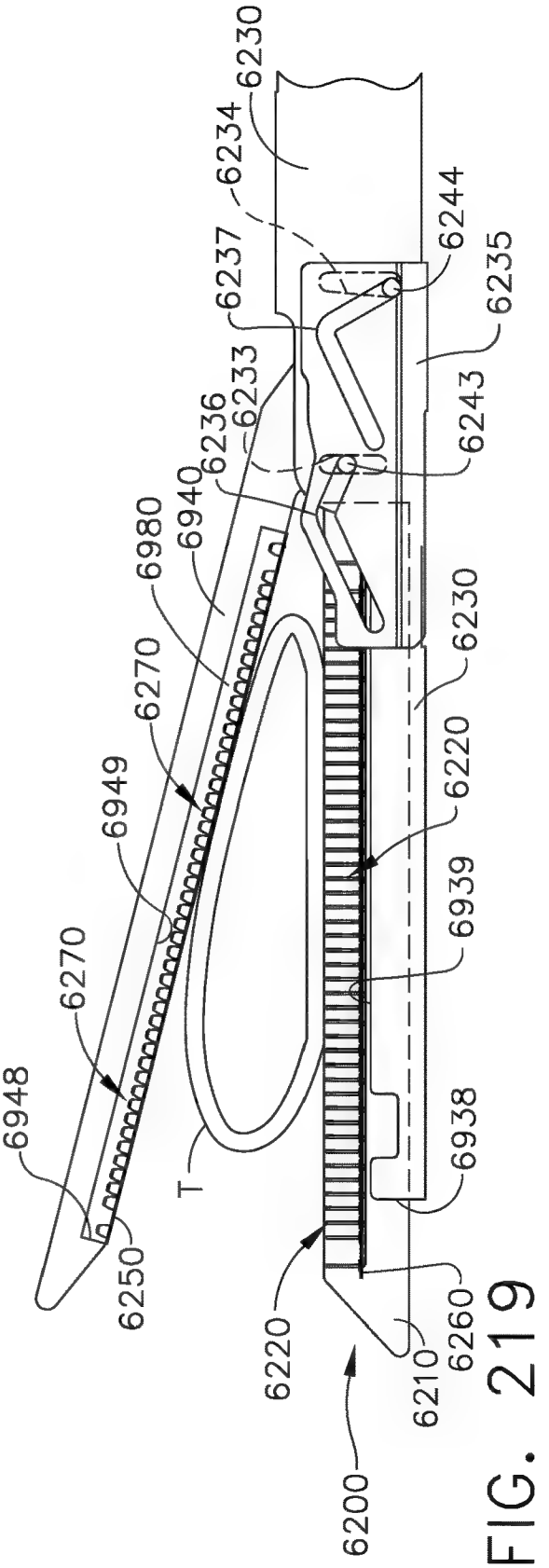

FIG. 219

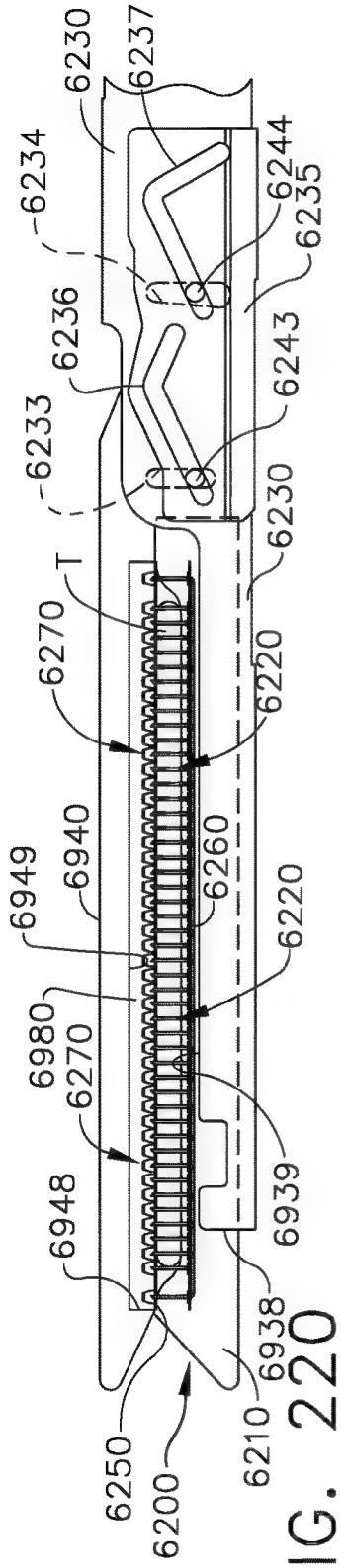

FIG. 220

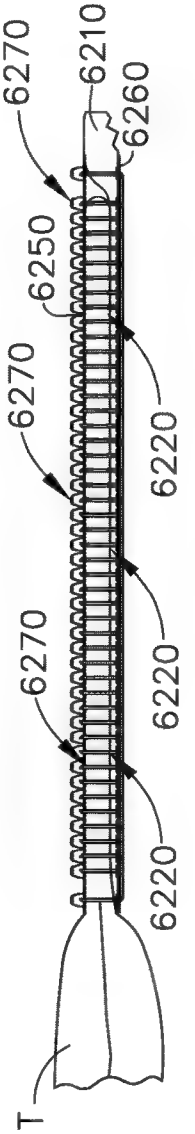

FIG. 221

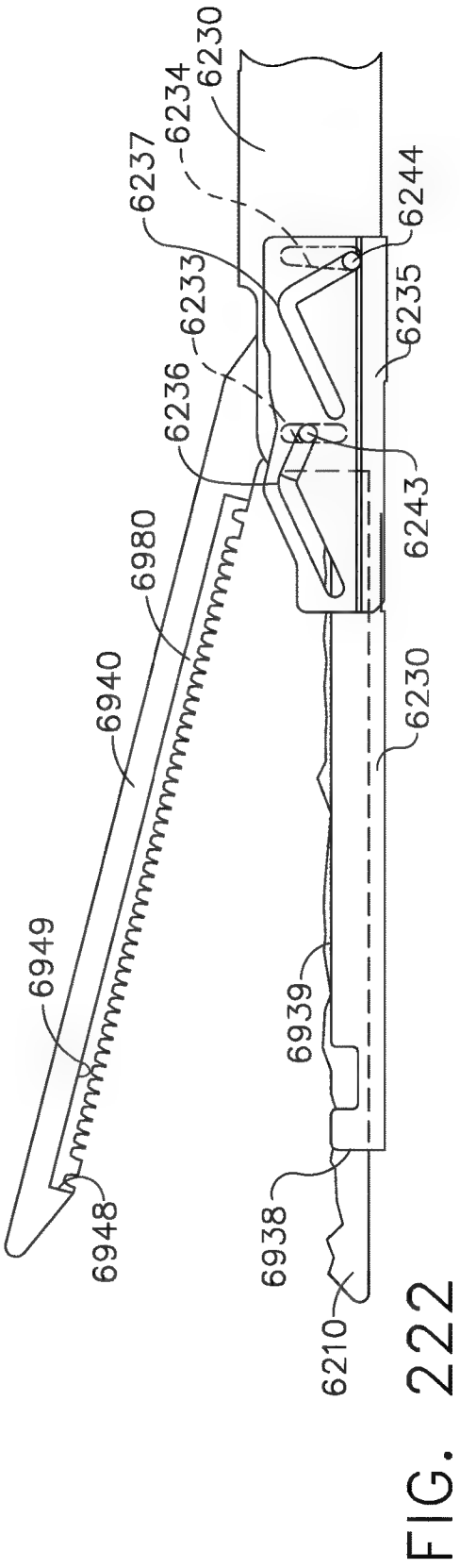

FIG. 222

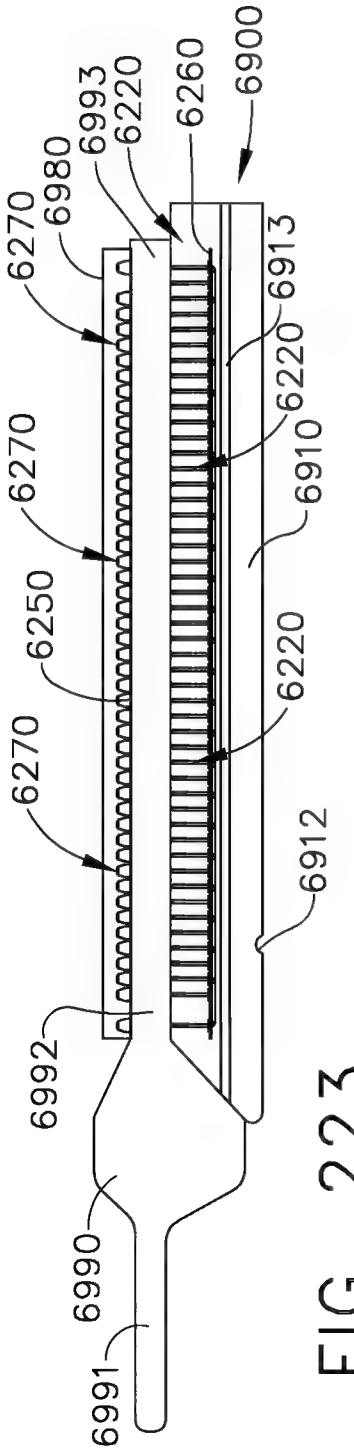

FIG. 223

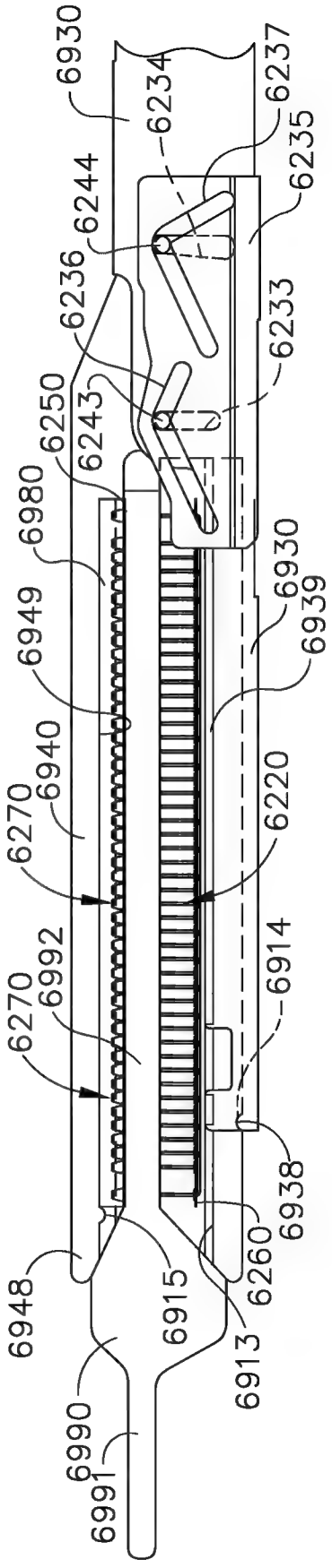

FIG. 224

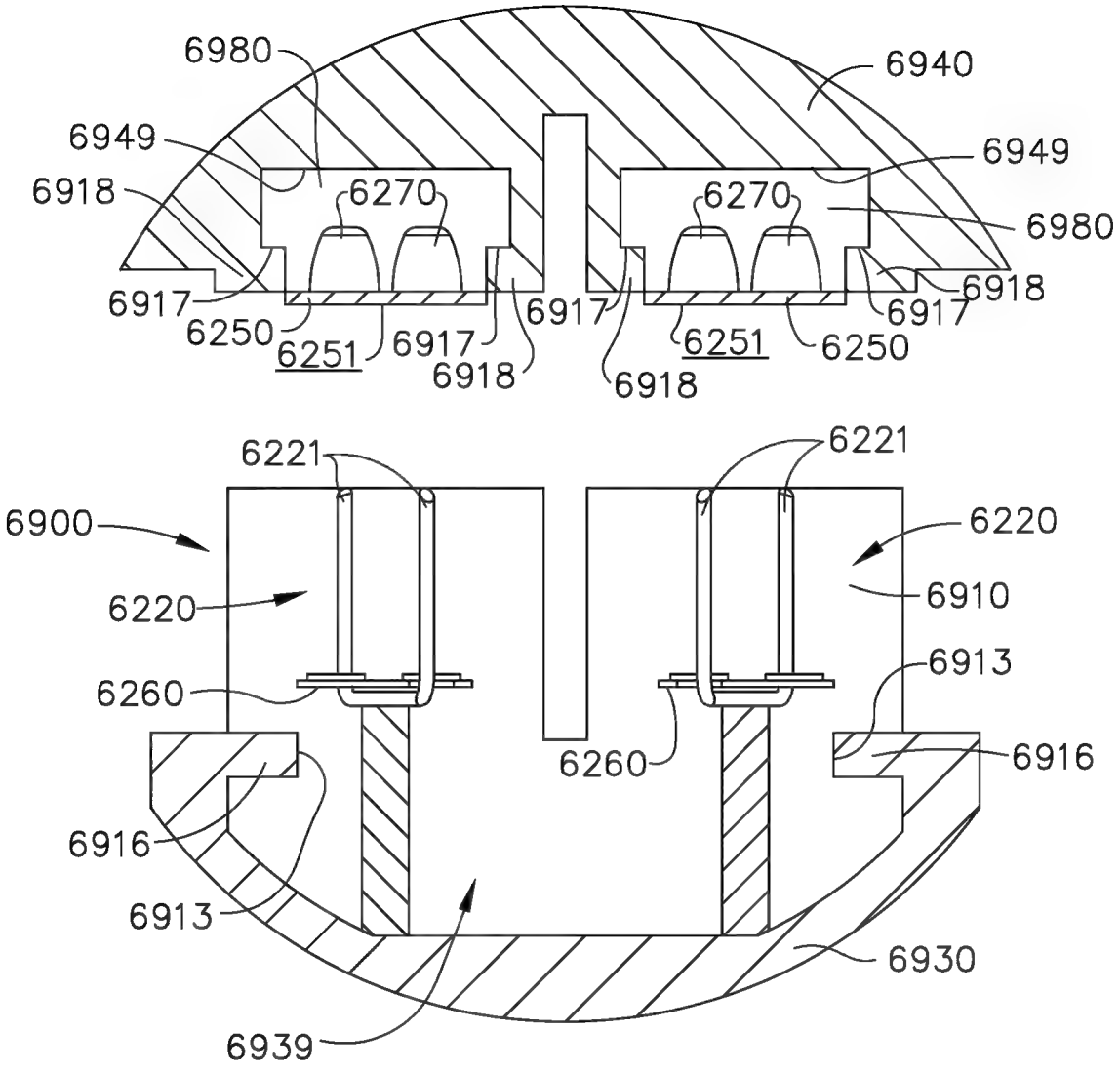
6980
6940
6949
6949
6918
6270
6270
6980
6917
6250
6251
6917
6918
6917
6918
6917
6918
6251
6250
6221
6221
6900
6220
6220
6910
6260
6913
6260
6916
6916
6913
6930
6939

FIG. 225

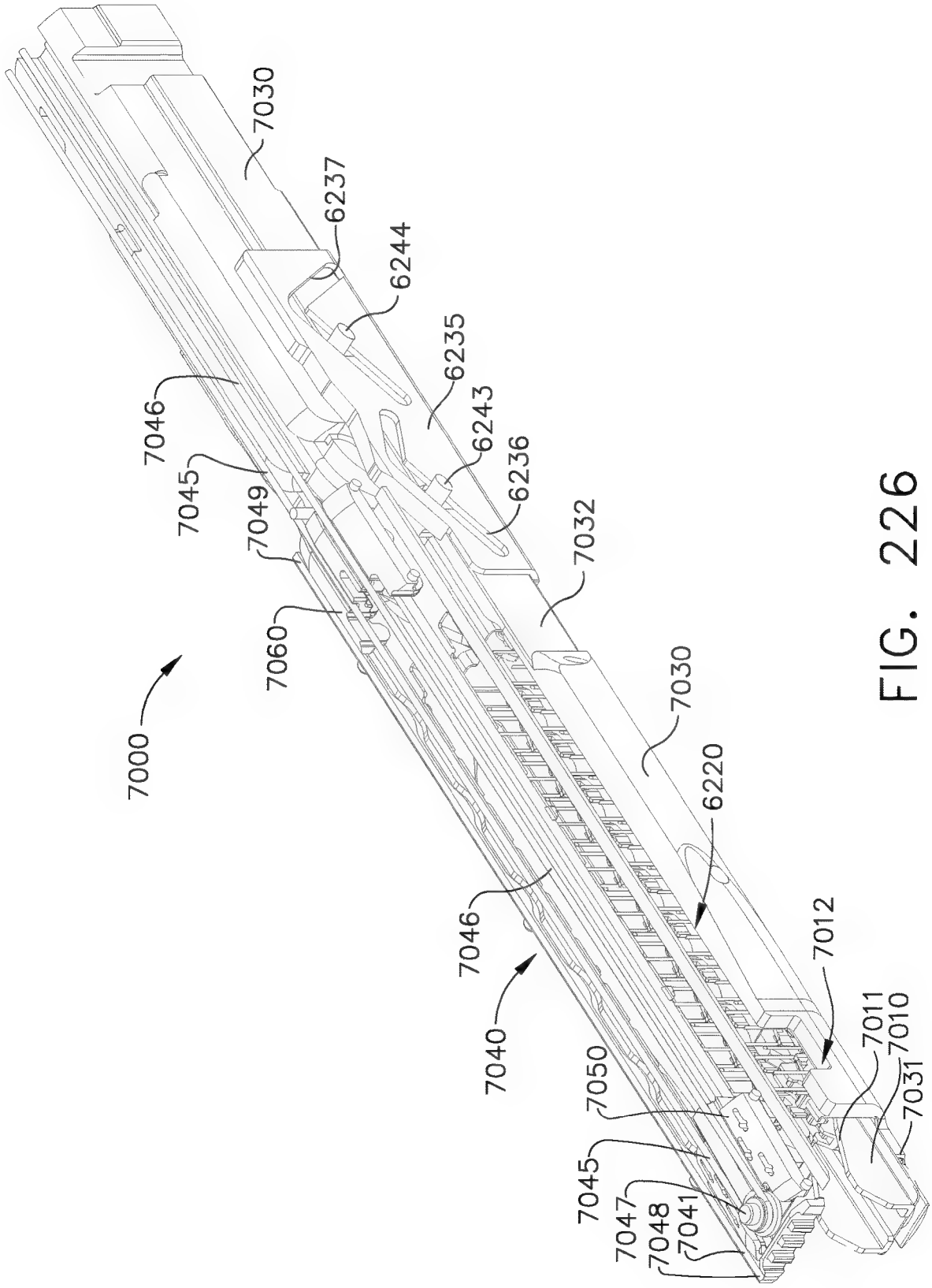
7030
6237
6244
6235
6243
6236
7032
7046
7045
7049
7060
7000
7030
6220
7012
7046
7040
7050
7045
7047
7048
7041
7011
7010
7031

FIG. 226

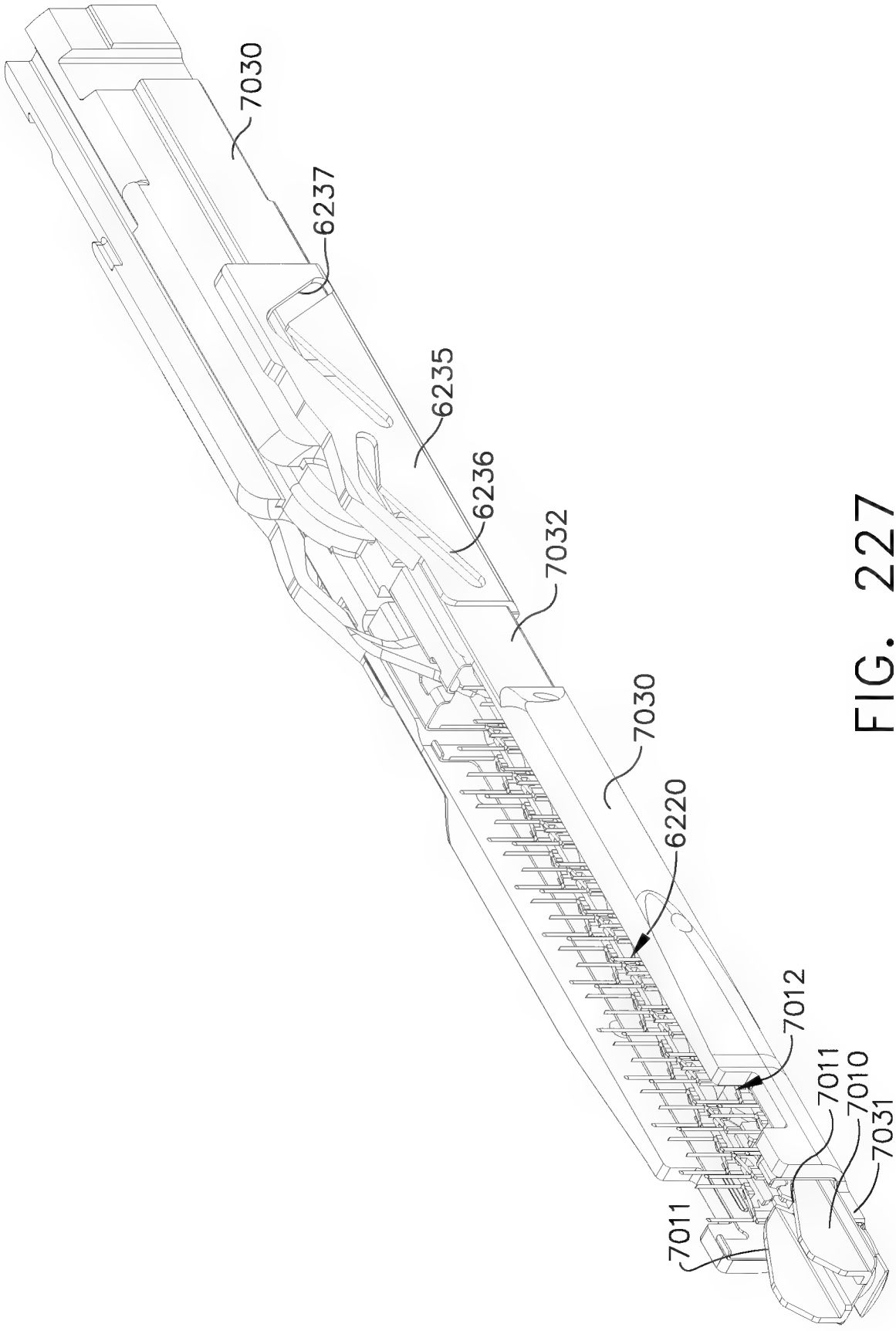

FIG. 227

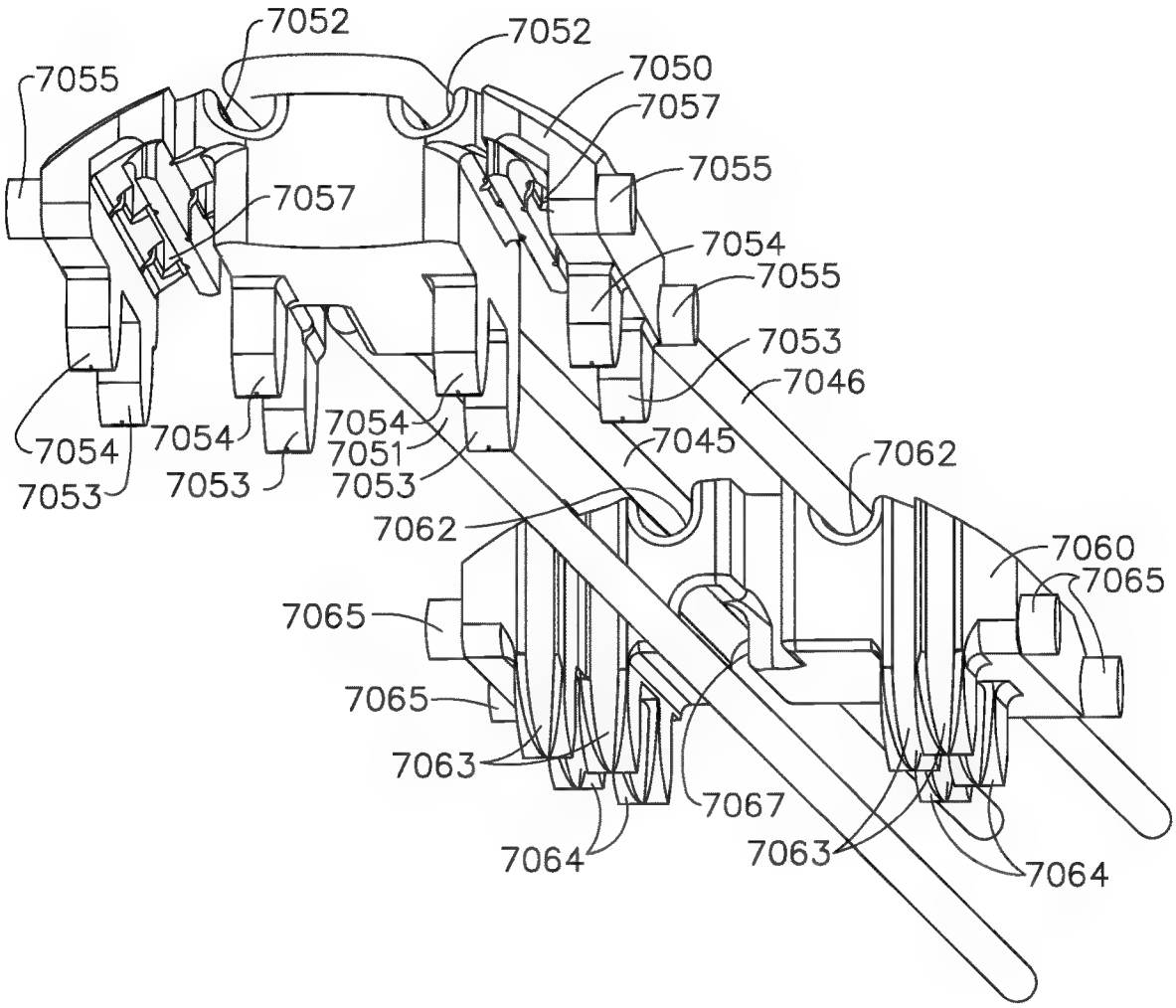
7052
7052
7055
7050
7057
7055
7057
7054
7055
7053
7046
7054
7054
7045
7062
7054
7051
7053
7053
7062
7060
7065
7065
7065
7063
7067
7064
7063
7064

FIG. 228

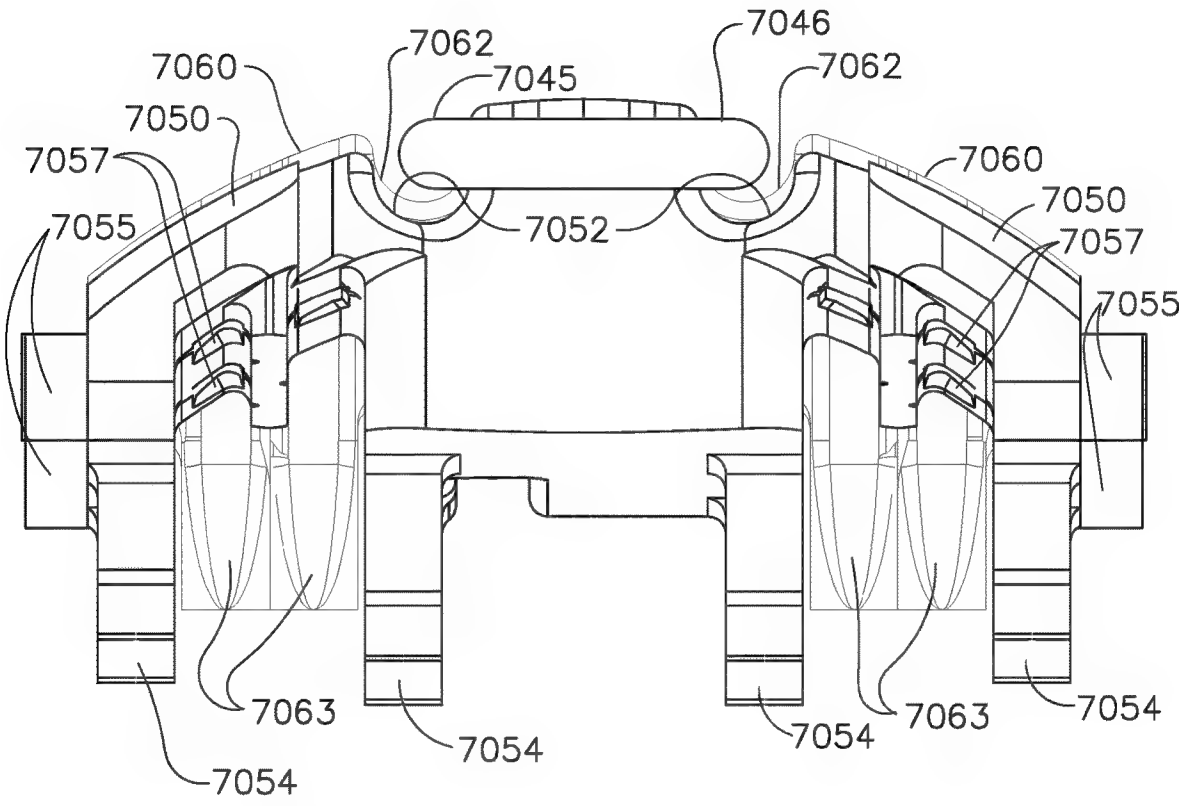
7046
7062
7060
7045
7062
7050
7057
7060
7050
7055
7052
7057
7055
7063
7063
7054
7054
7054
7054

FIG. 229

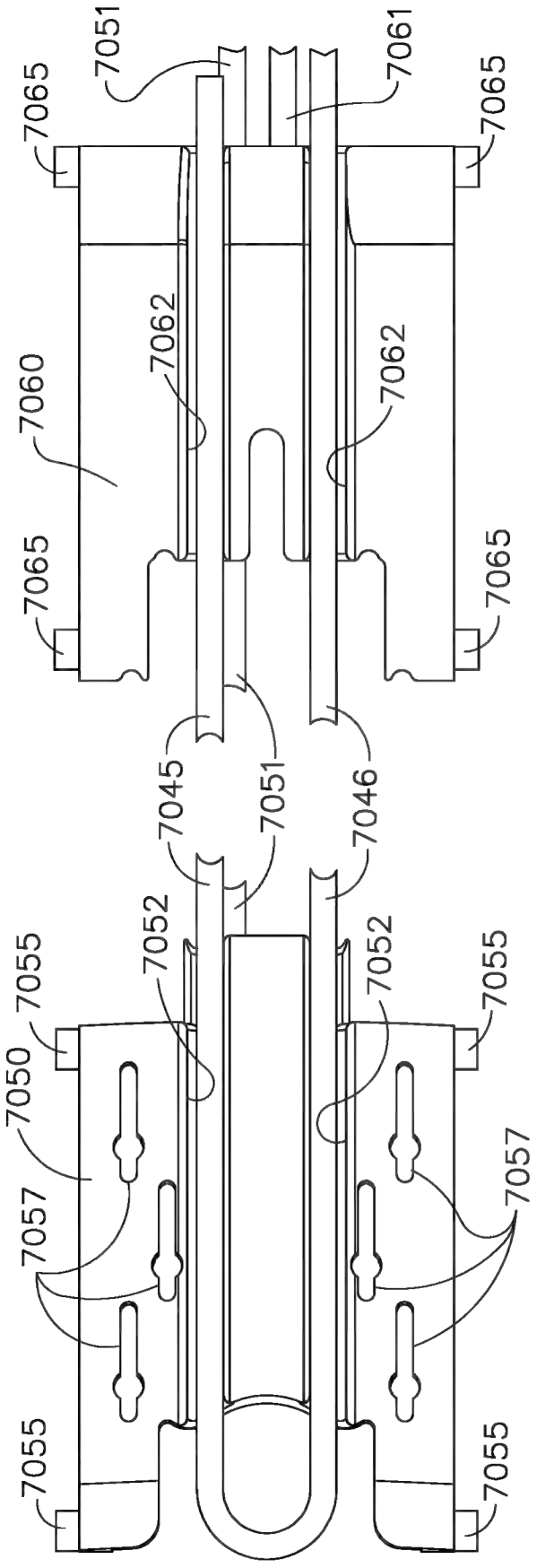
7051
7061
7065
7065
7062
7062
7060
7065
7065
7045
7051
7046
7052
7052
7055
7055
7050
7057
7057
7055
7055

FIG. 230

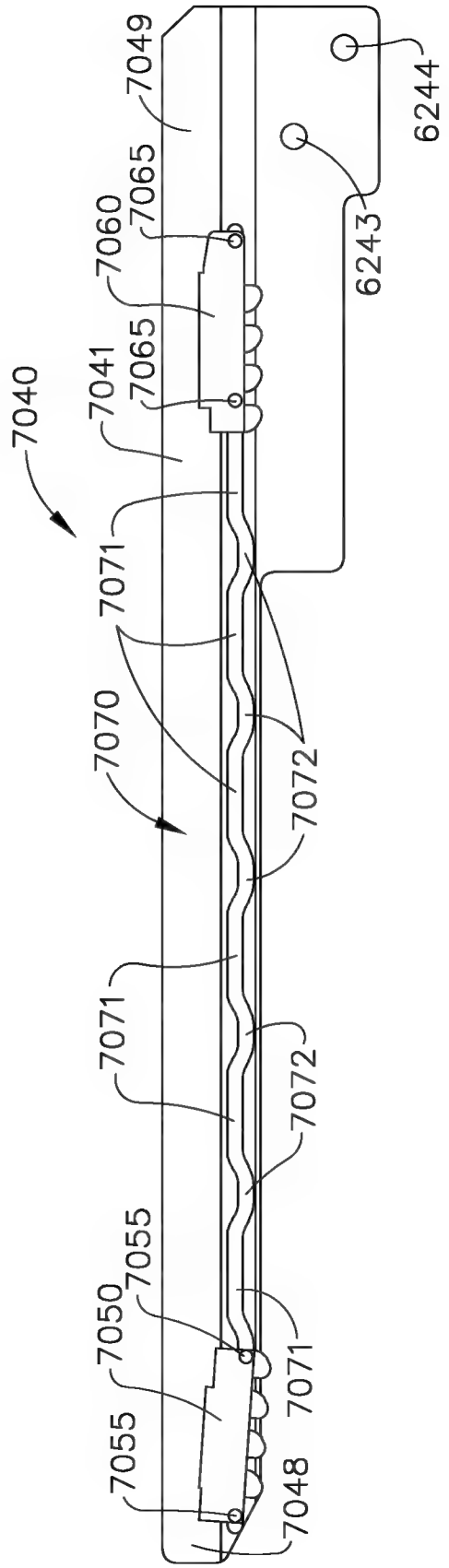
7049
6244
7065
7060
6243
7065
7041
7040
7071
7070
7072
7071
7072
7055
7050
7071
7055
7048

FIG. 231

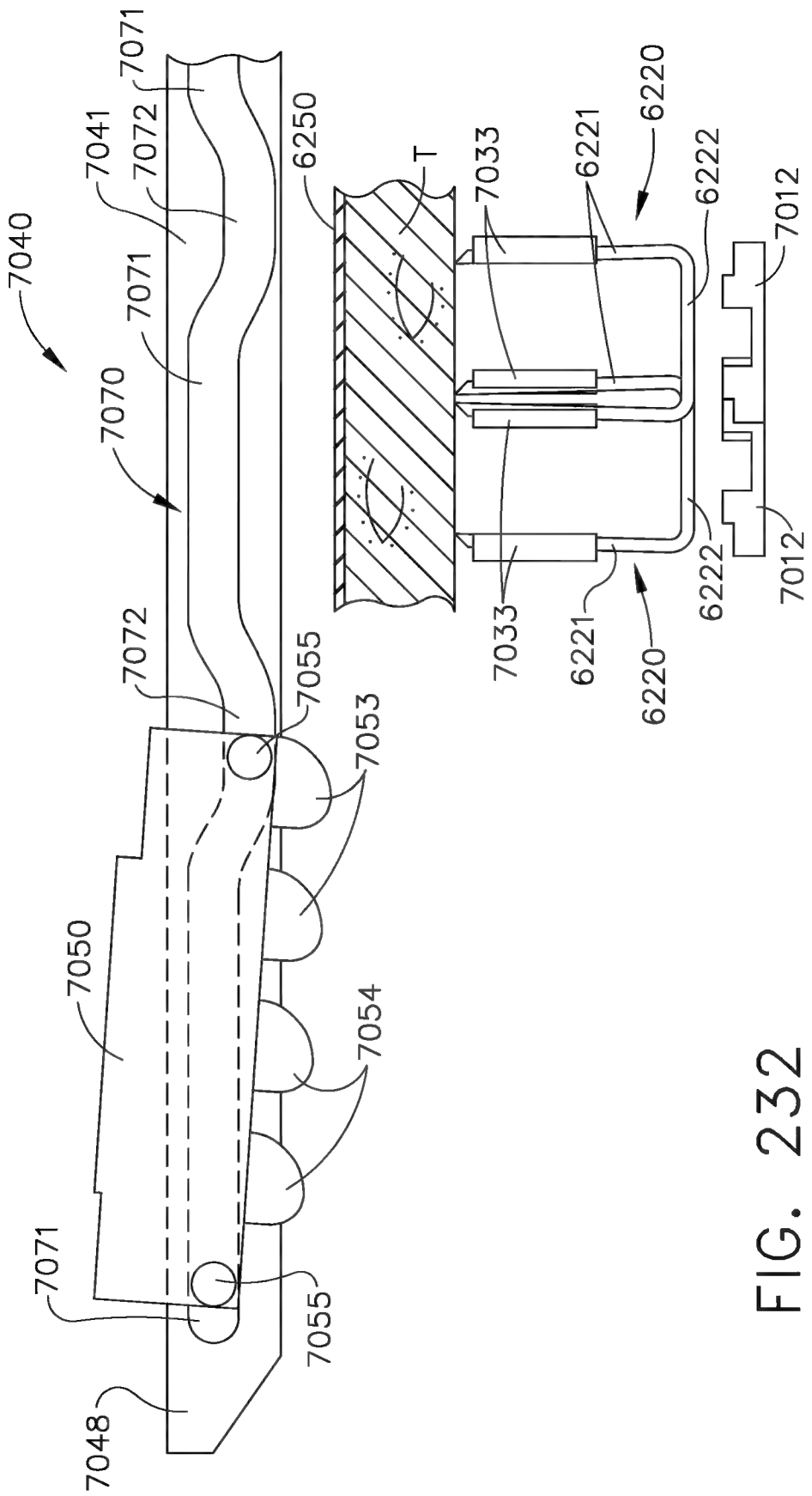
7040
7071
7041
7072
7071
7070
7072
7055
7053
7050
7054
7071
7055
7048
6250
T
7033
6221
6220
6222
7012
7033
6221
6220
6222
7012

FIG. 232

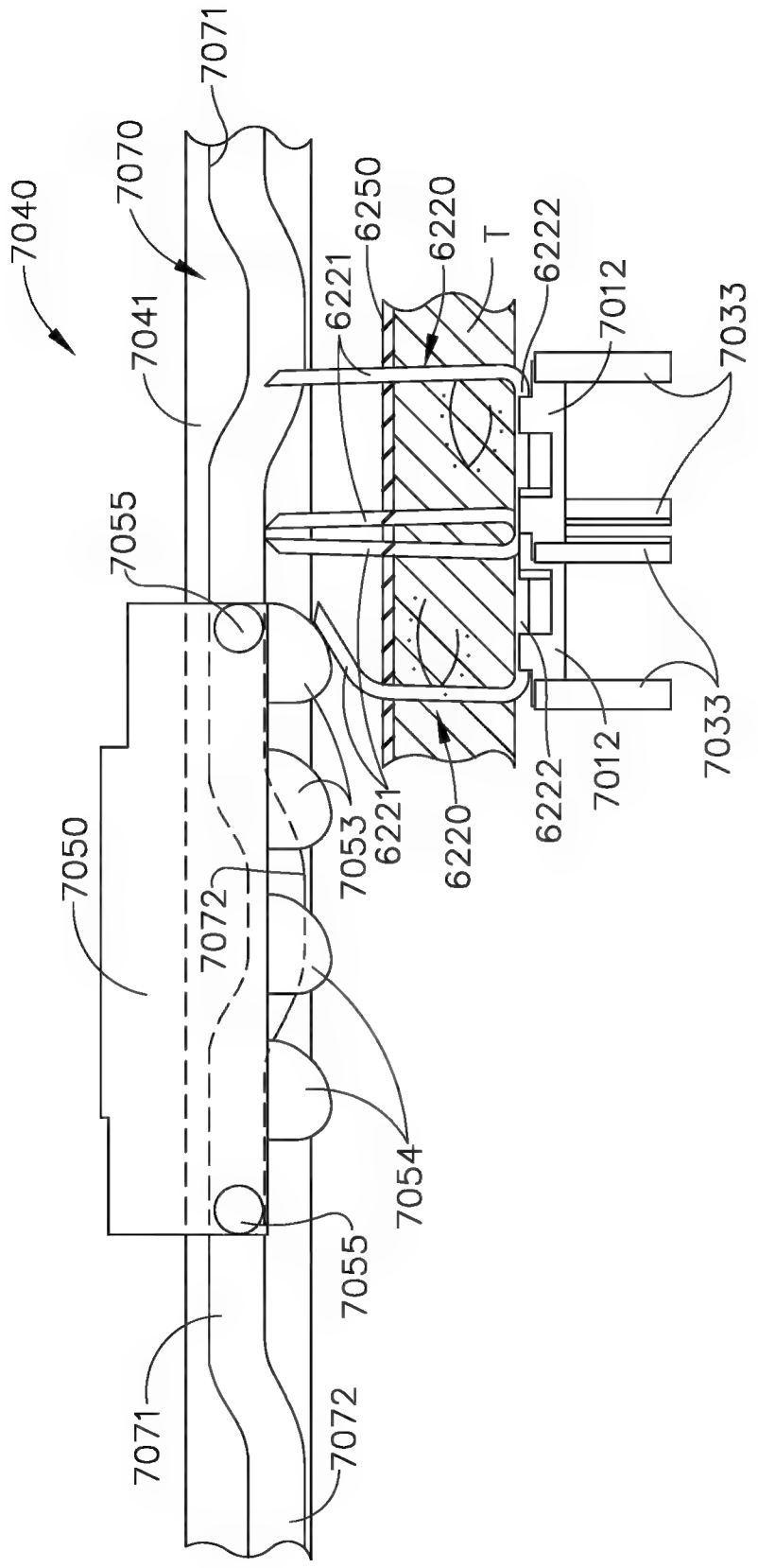
7040
7071
7070
7041
6250
6221
6220
T
6222
7012
7033
7055
7050
7053
7072
7054
7071
7072

FIG. 233

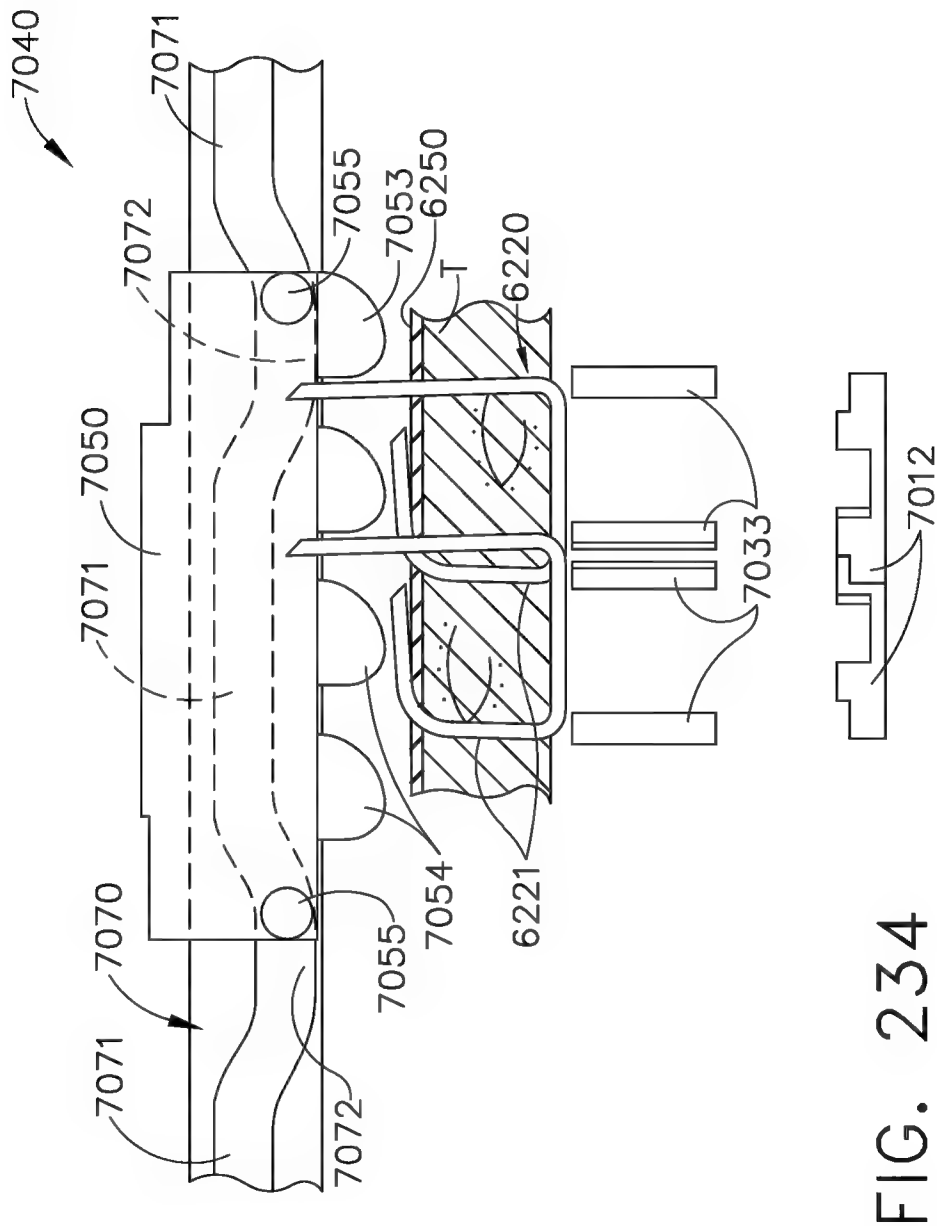
7040
7071
7072
7055
7053
6250
6220
7050
7071
7033
7012
7070
7071
7055
7054
6221
7072

FIG. 234

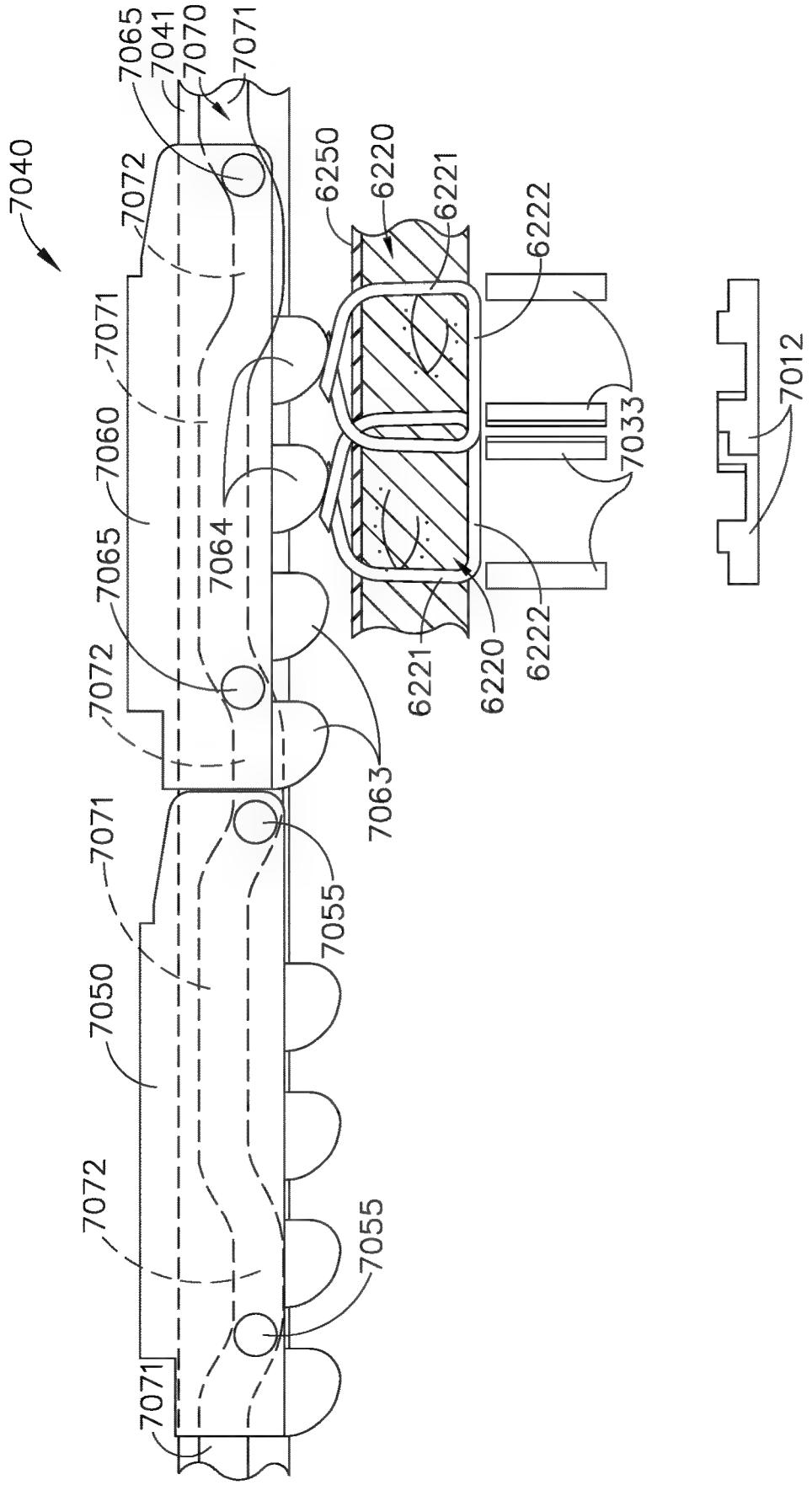
7040
7065
7041
7070
7071
7072
6250
6220
6221
6222
7071
7060
7065
7064
7072
7063
7071
7055
7050
7072
7055
7071
6221
6220
6222
7033
7012

FIG. 235

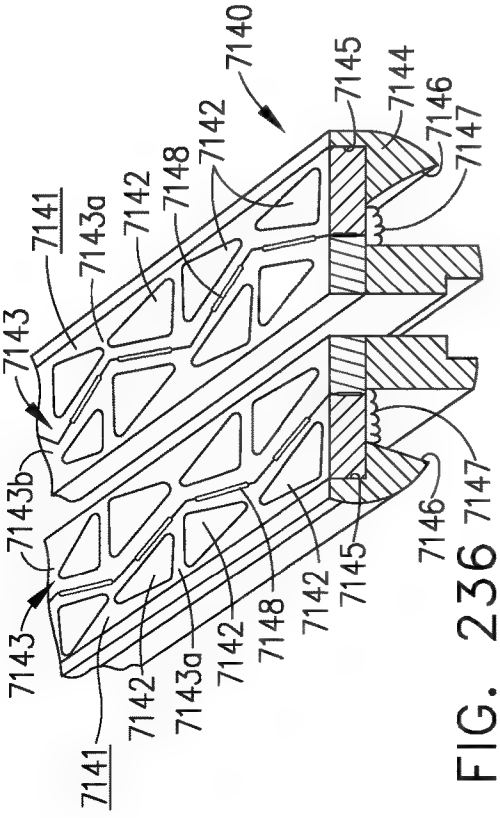

FIG. 236

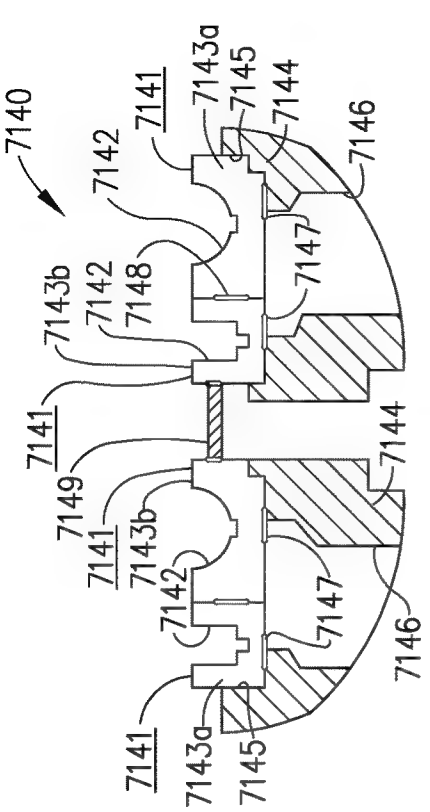

FIG. 237

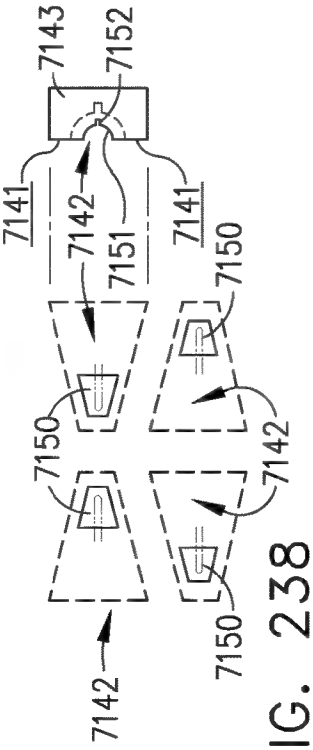

FIG. 238

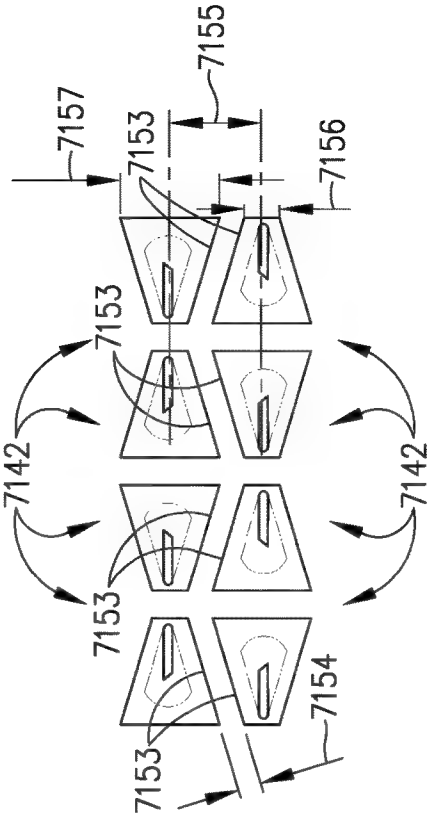

FIG. 240

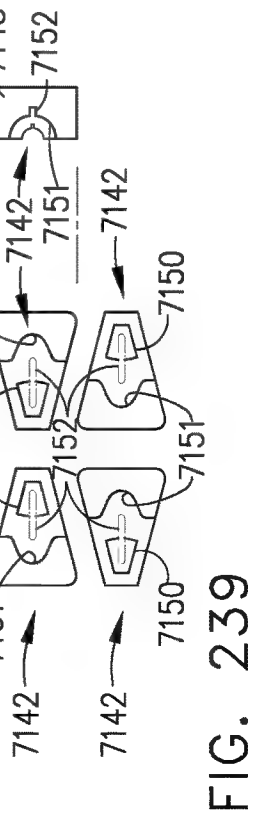

FIG. 239

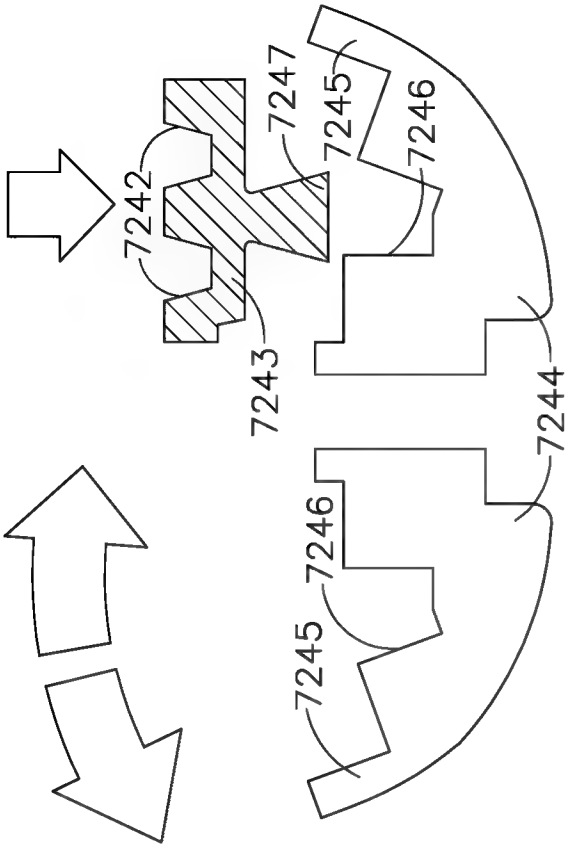

FIG. 242

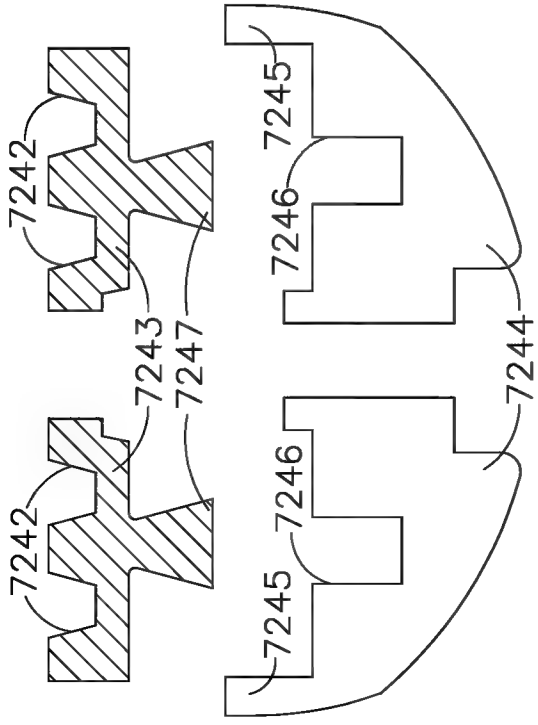

FIG. 241

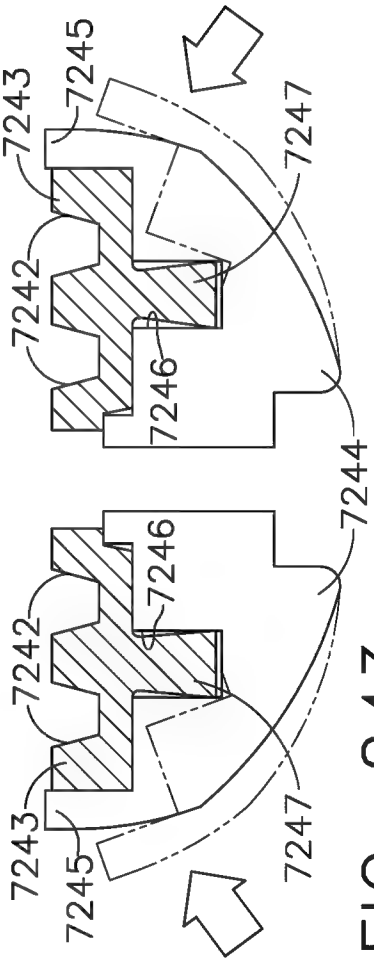

FIG. 243

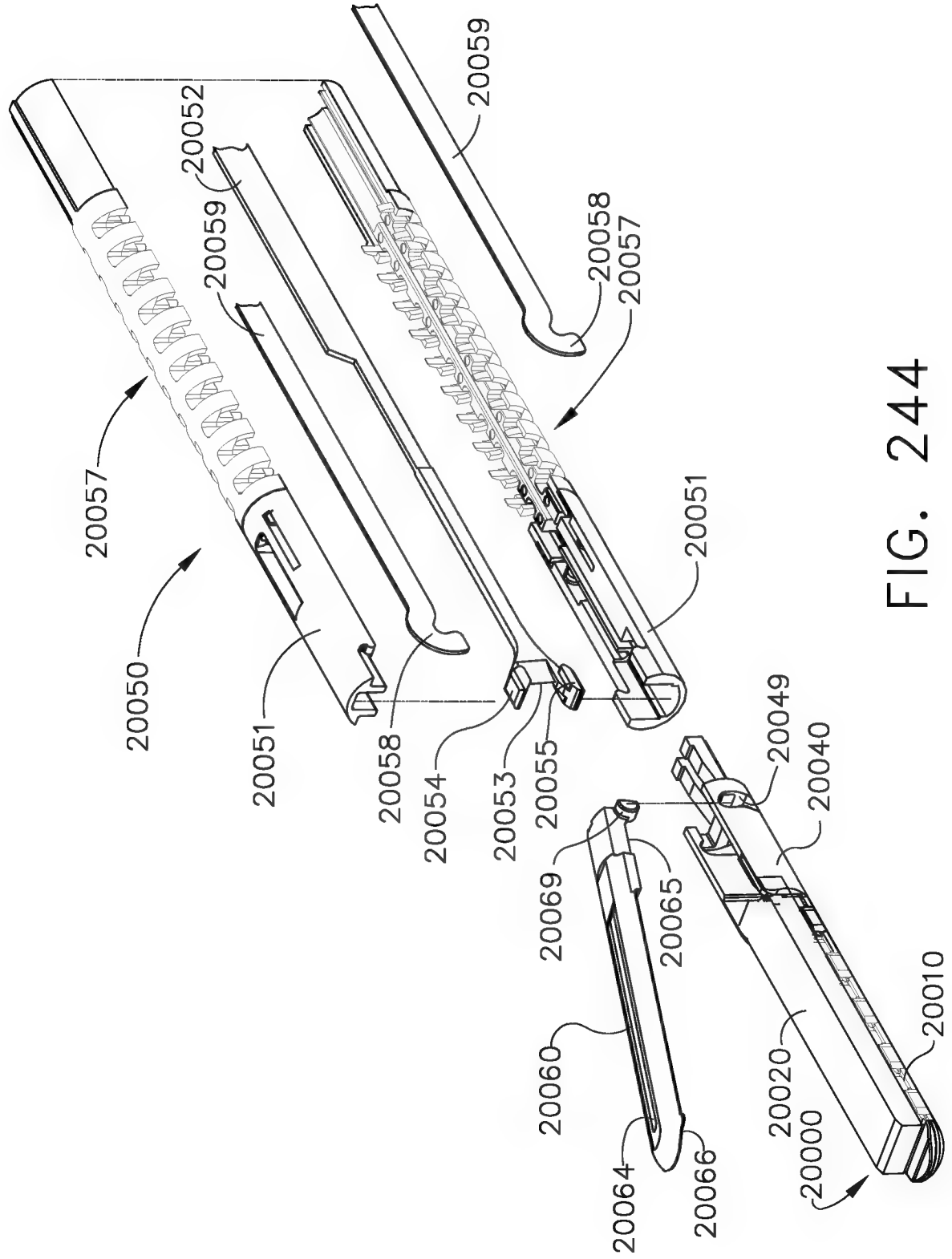
20059
20052
20059
20058
20057
20057
20050
20051
20058
20054
20053
20055
20051
20049
20040
20069
20065
20060
20064
20066
20020
20000
20010

FIG. 244

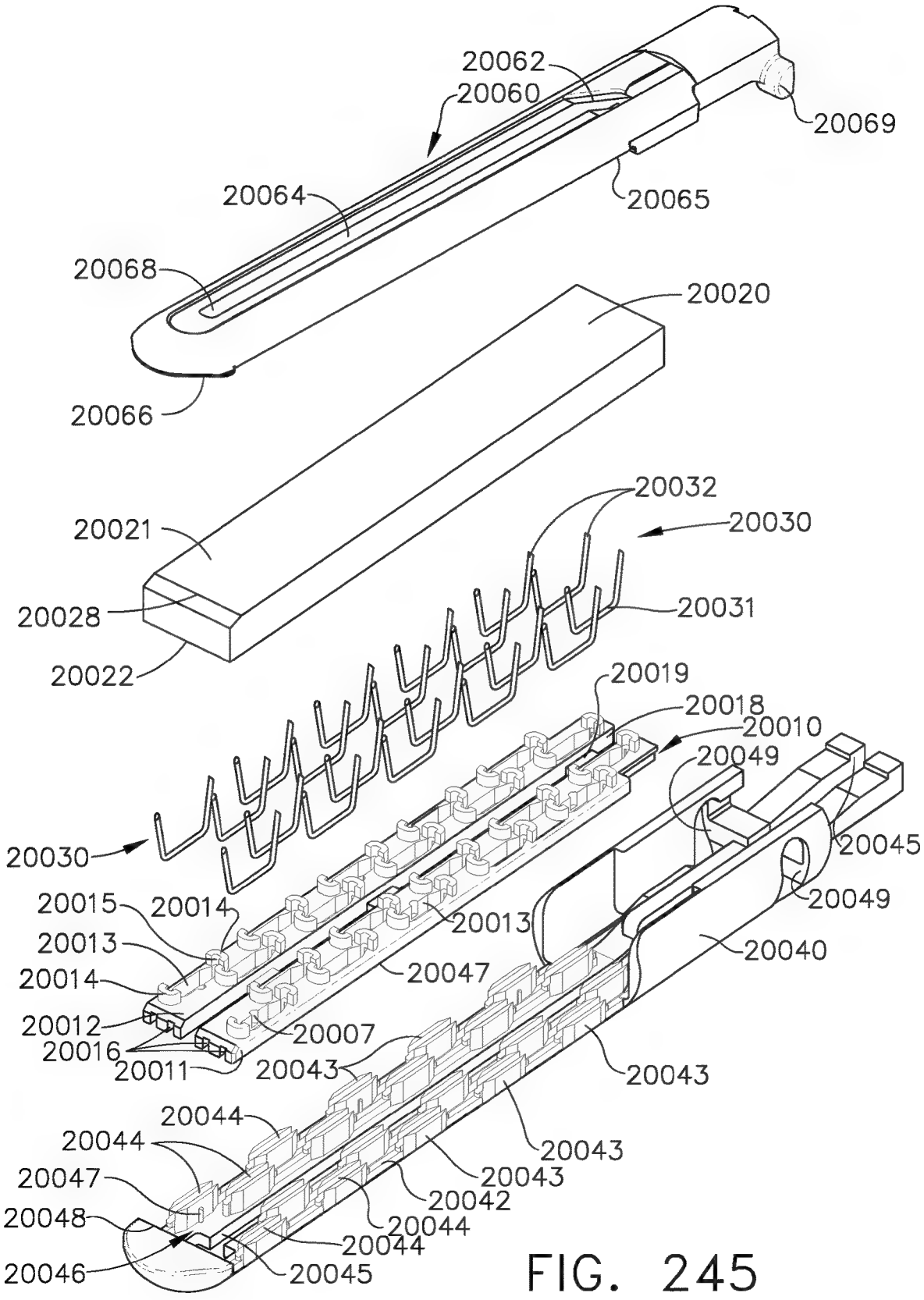
20062
20060
20069
20064
20065
20068
20020
20066
20032
20021
20030
20028
20031
20022
20019
20018
20010
20049
20030
20045
20015
20014
20049
20013
20013
20040
20014
20047
20012
20007
20016
20011
20043
20043
20044
20044
20043
20047
20043
20042
20048
20044
20044
20046
20045

FIG. 245

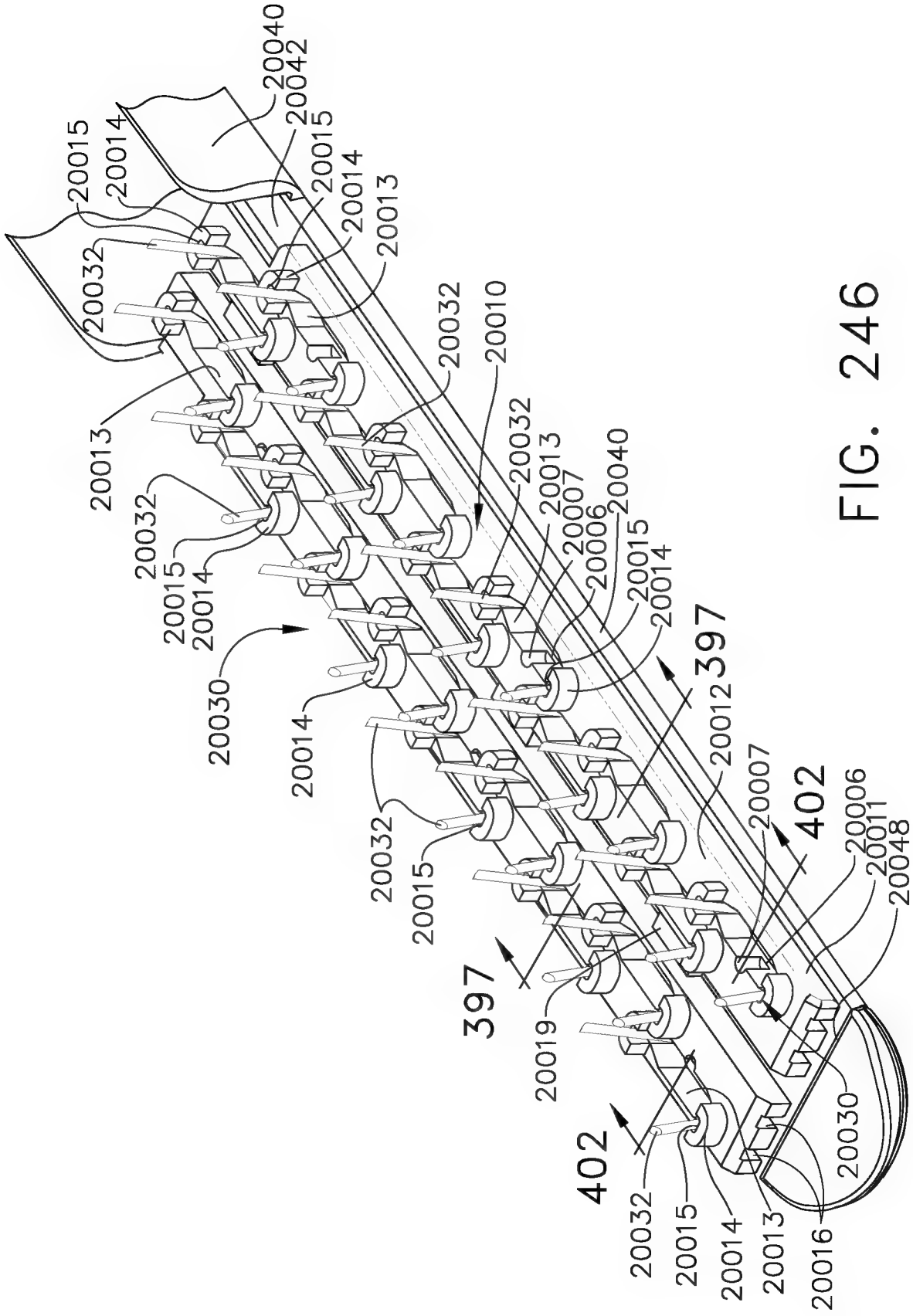
20040
20042
20015
20014
20013
20032
20010
20007
20006
20030
20012
397
402
20011
20048
20019
20016

FIG. 246

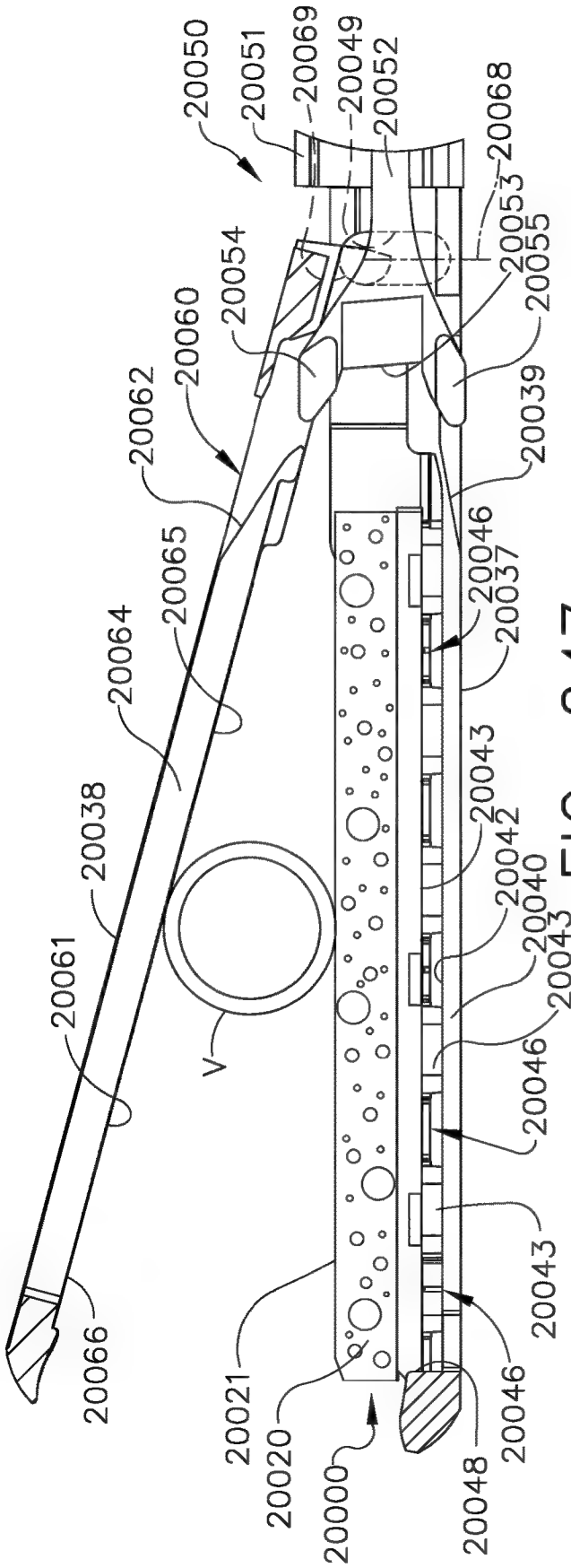

FIG. 247

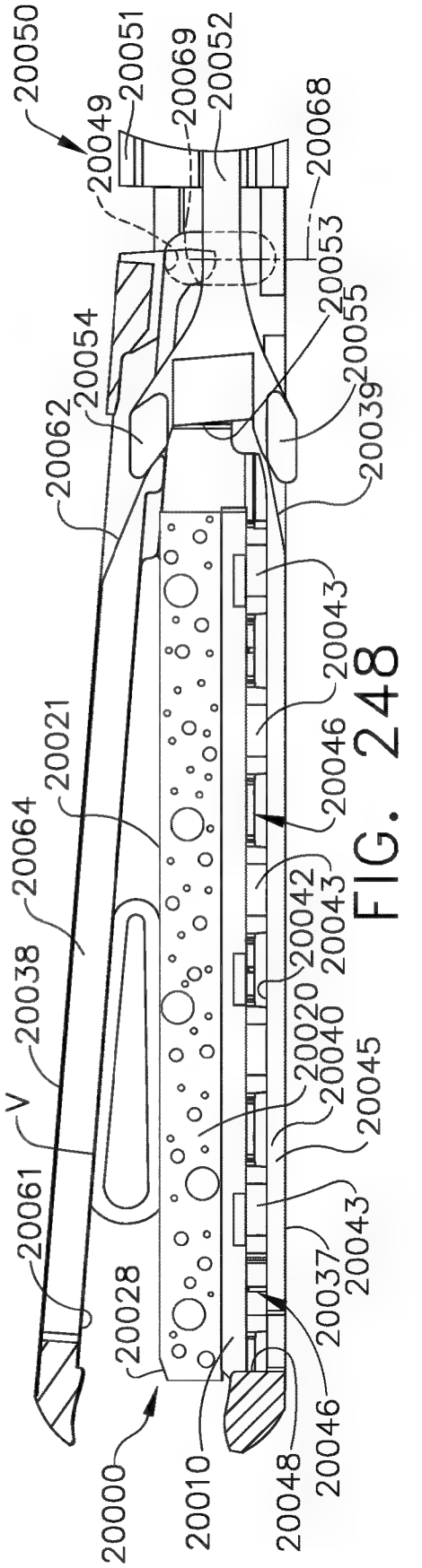

FIG. 248

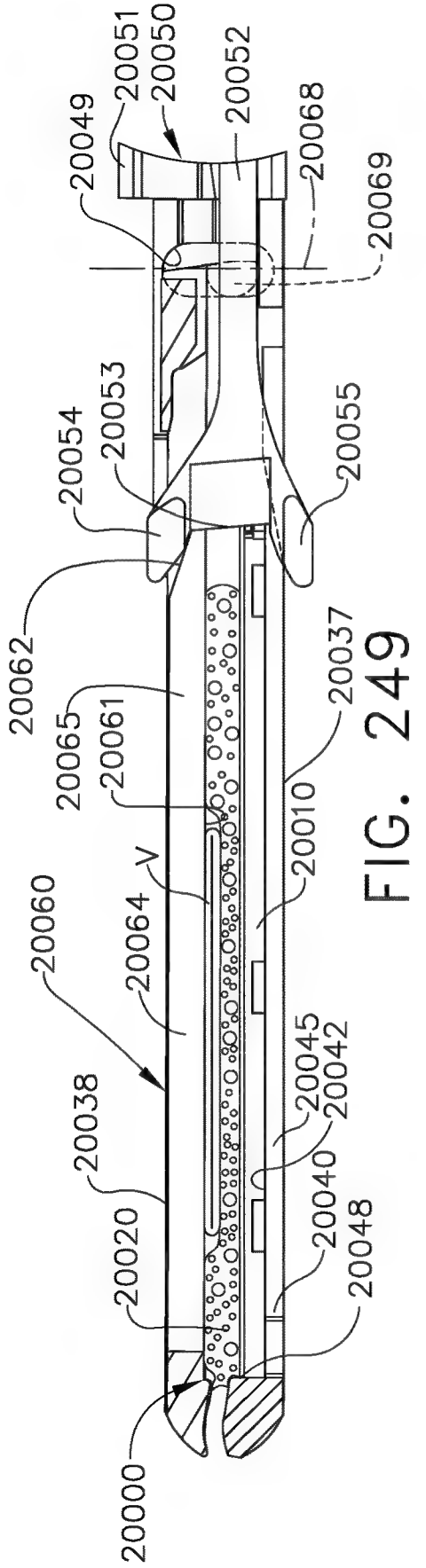

FIG. 249

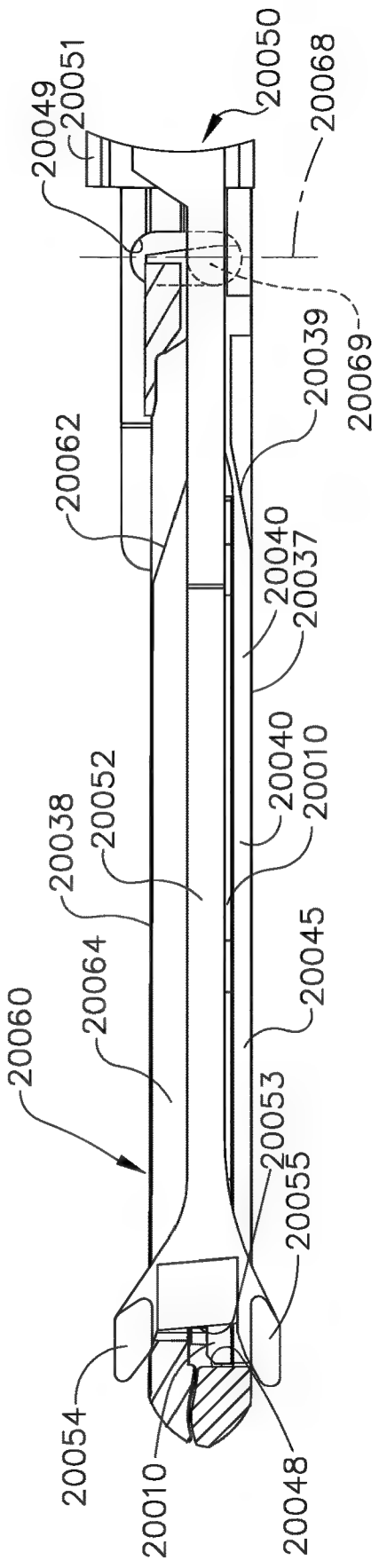

FIG. 250

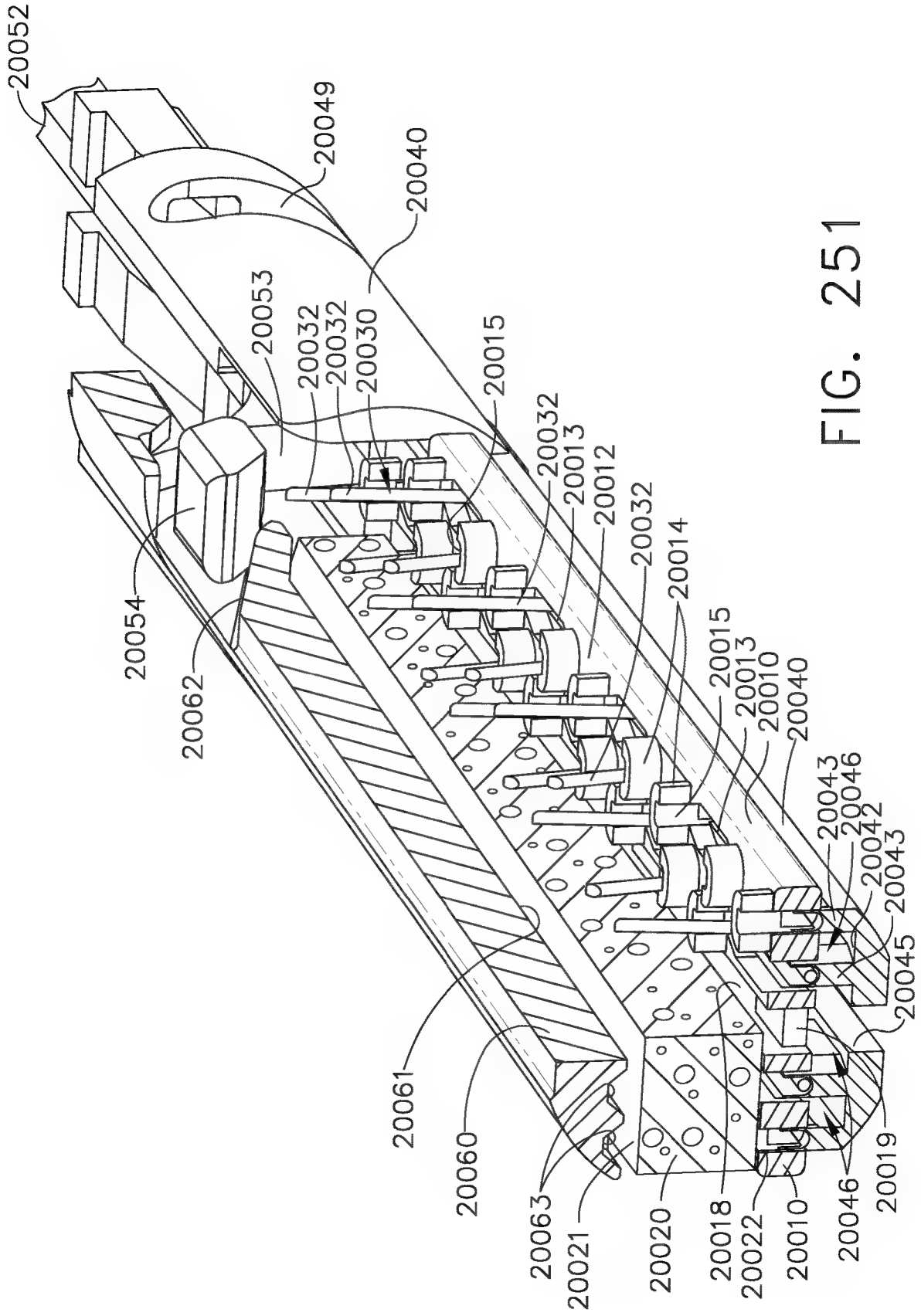
20052
20049
20040
20053
20032
20032
20030
20015
20032
20013
20012
20032
20014
20015
20013
20010
20040
20043
20046
20042
20043
20045
20019
20046
20010
20022
20018
20020
20021
20063
20060
20061
20062
20054

FIG. 251

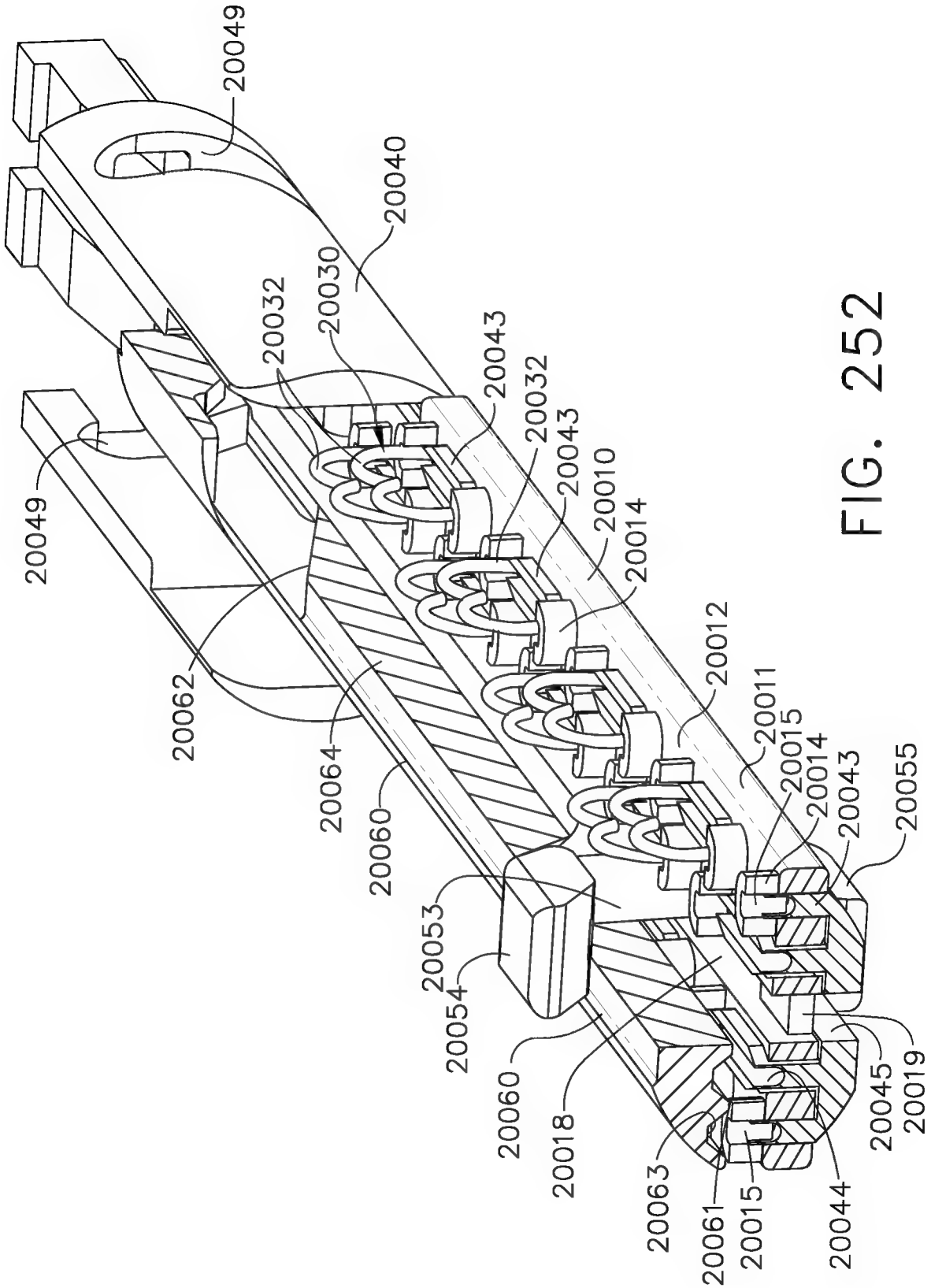
20049
20049
20040
20030
20032
20032
20043
20043
20043
20010
20014
20012
20011
20015
20014
20043
20055
20062
20064
20060
20053
20054
20060
20018
20063
20061
20015
20044
20045
20019

FIG. 252

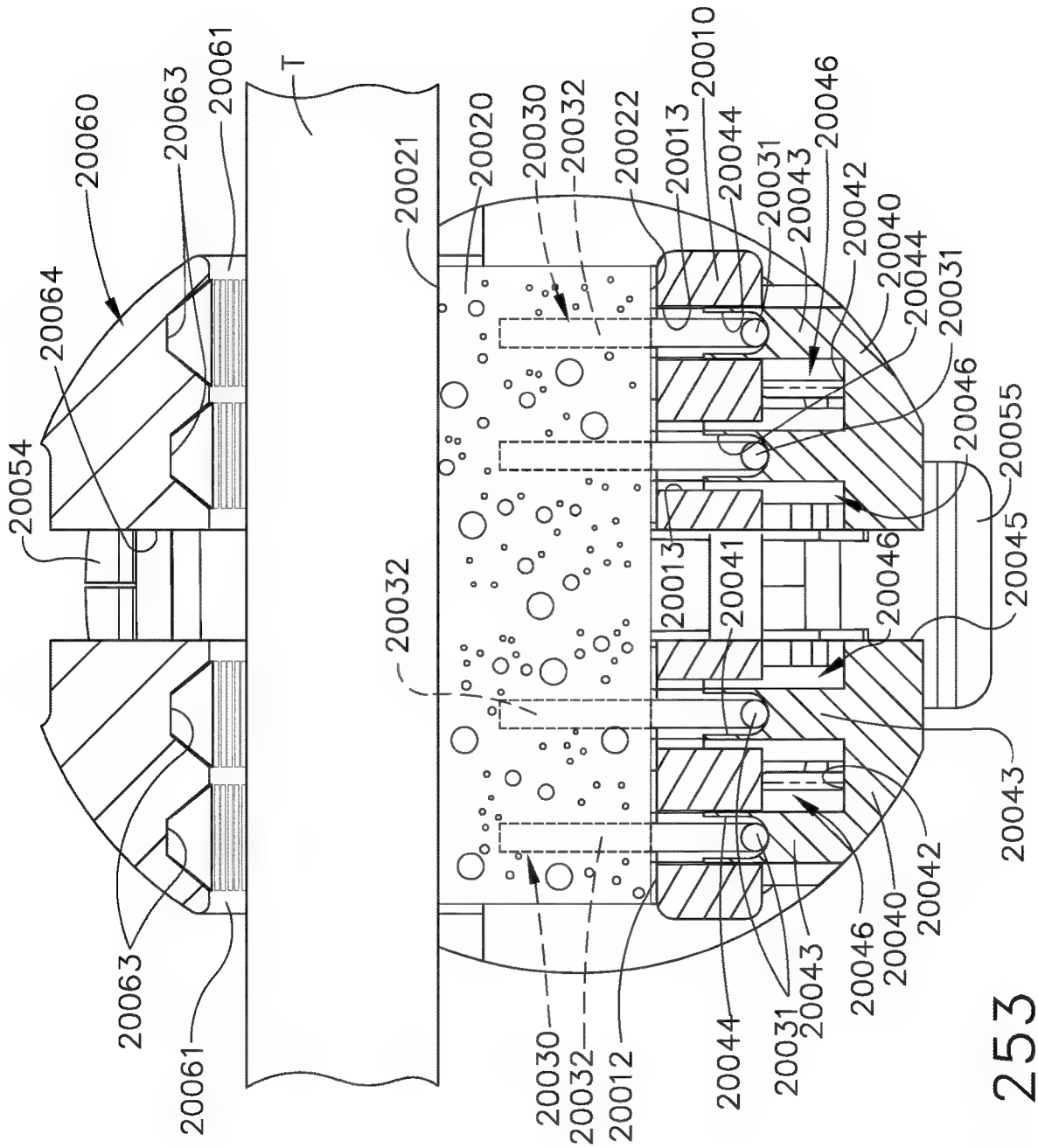
20054
20064
20060
20063
20061
T
20021
20020
20030
20032
20022
20013
20010
20044
20031
20043
20042
20040
20046
20055
20045
20041
20012
20063
20061

FIG. 253

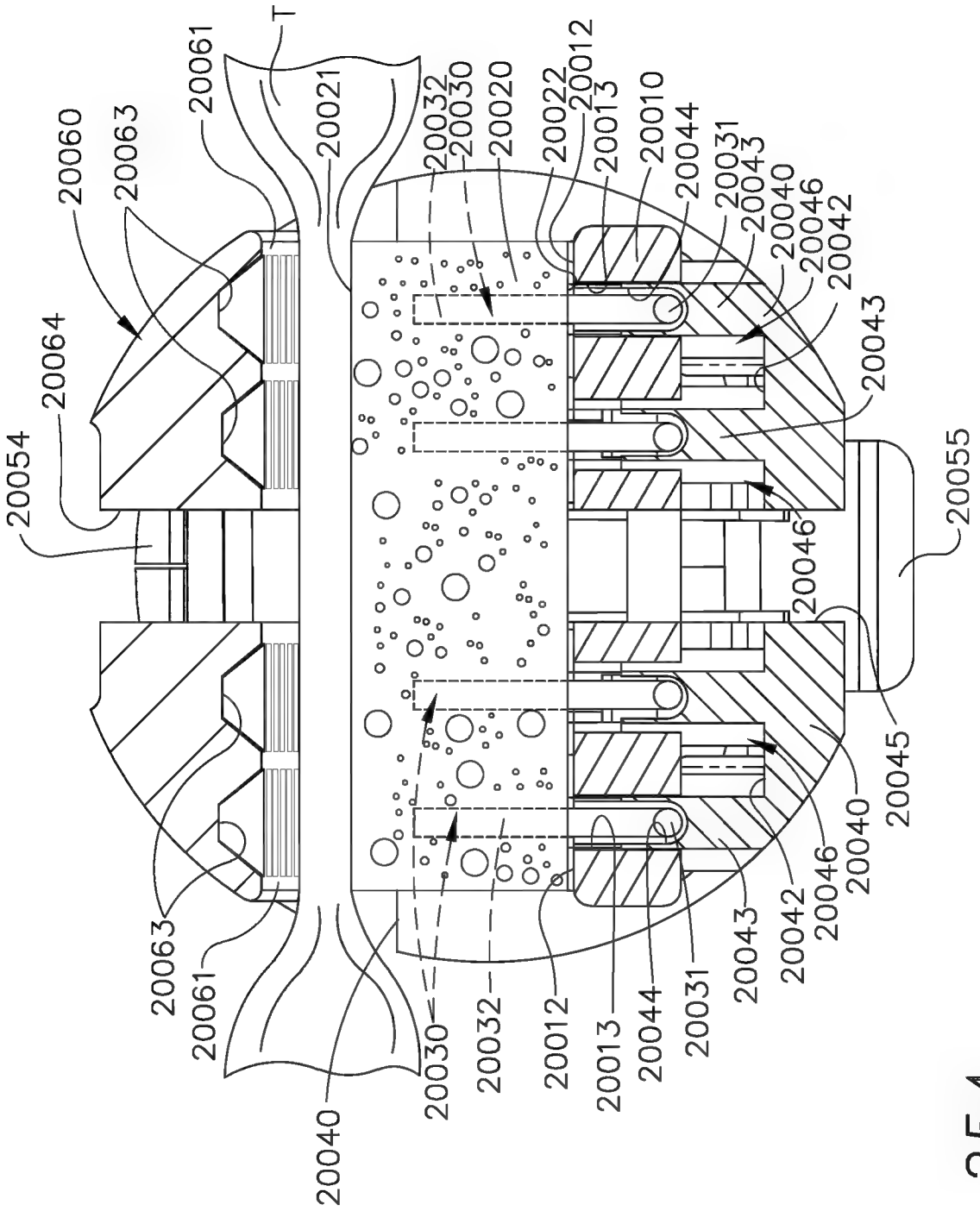
20054
20064
20060
20063
20061
T
20021
20032
20030
20020
20022
20012
20013
20010
20044
20031
20043
20040
20046
20042
20043
20055
20046
20045
20040
20046
20042
20043
20031
20044
20013
20012
20032
20030
20040
20061
20063

FIG. 254

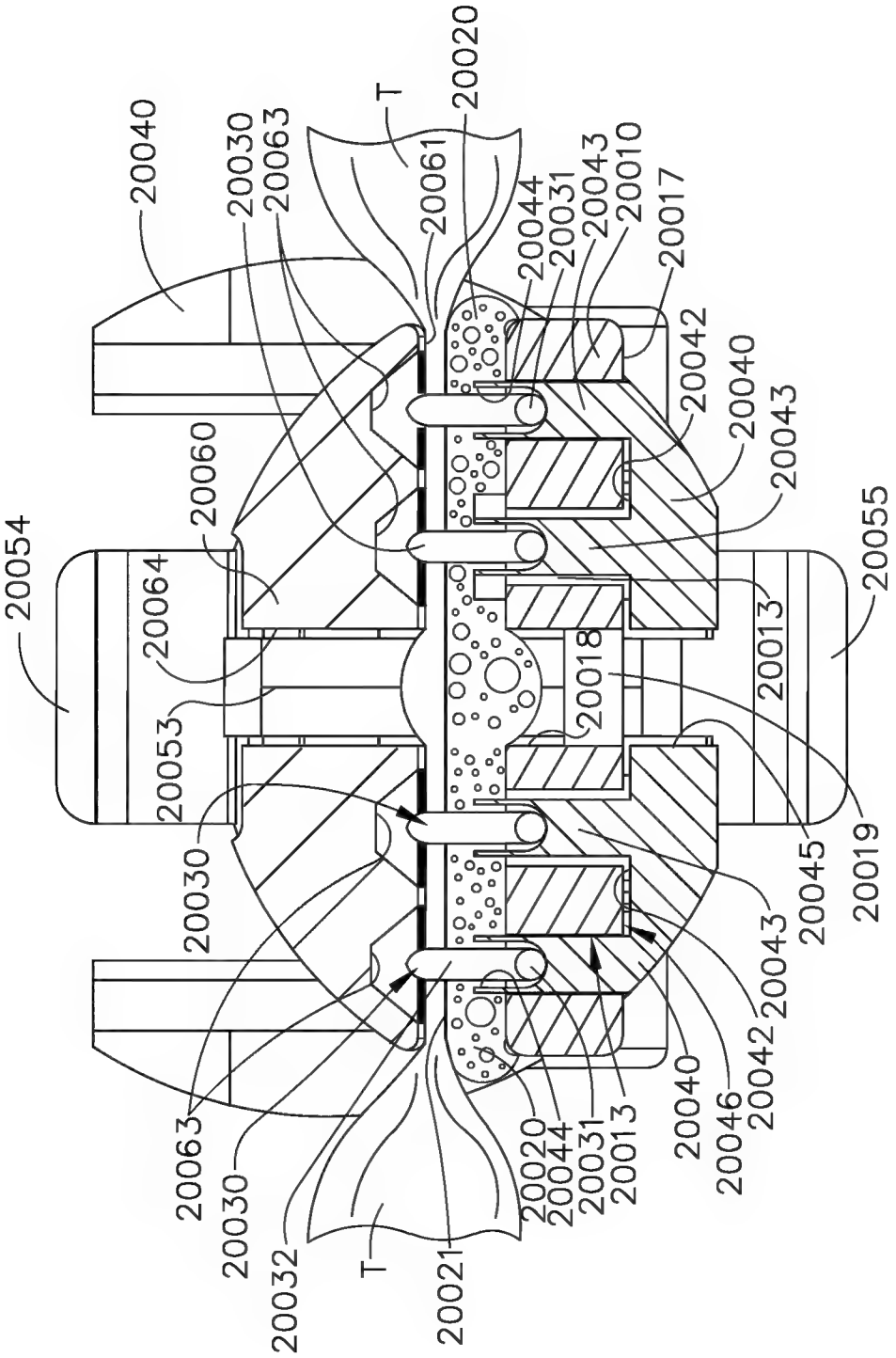
20040
20030
20063
T
20020
20061
20044
20031
20043
20010
20017
20042
20040
20043
20060
20054
20064
20053
20030
20018
20013
20055
20045
20019
20043
20042
20040
20046
20063
20030
20032
T
20021
20020
20044
20031
20013

FIG. 255

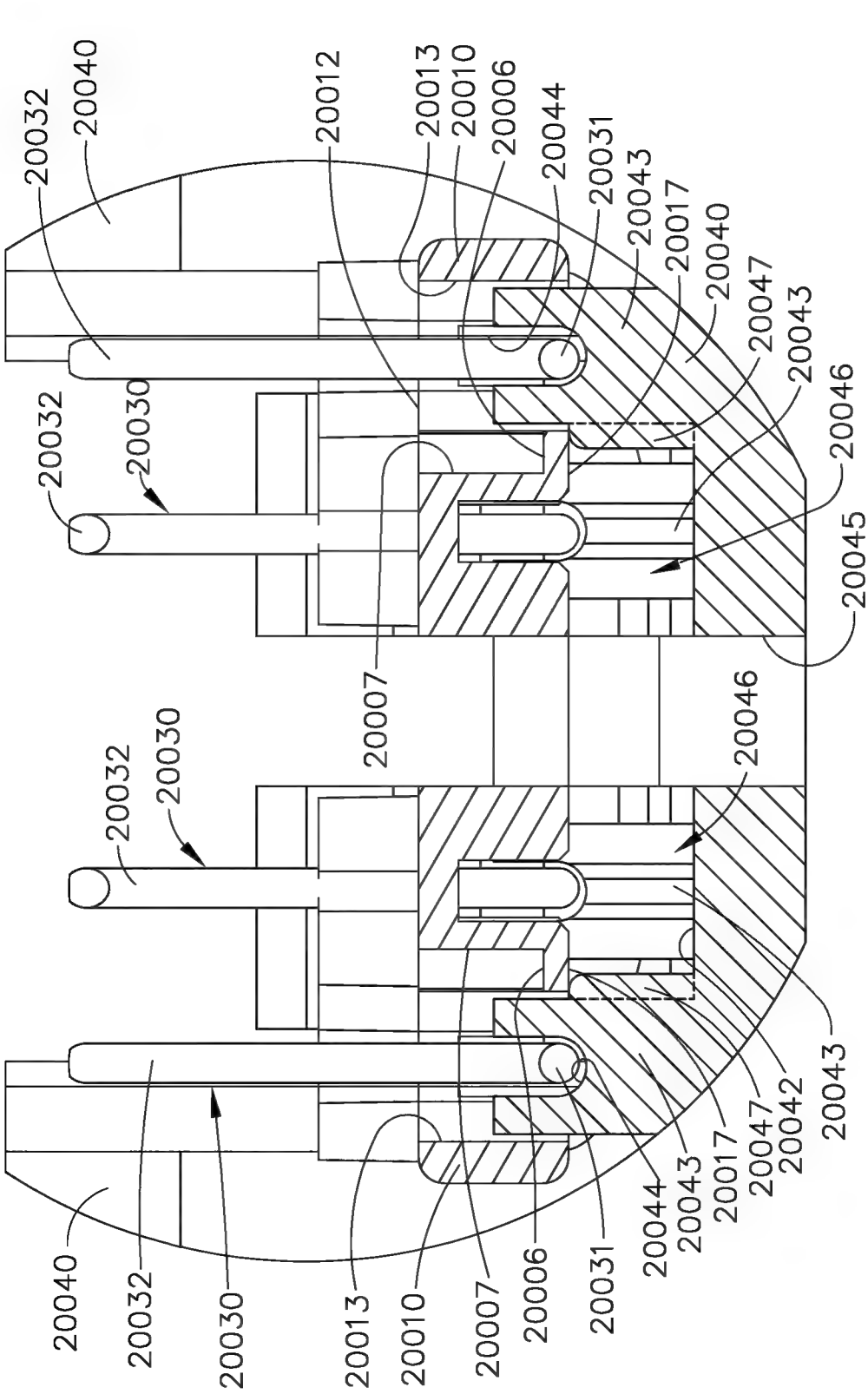
20032
20040
20012
20013
20010
20006
20044
20031
20043
20017
20040
20047
20043
20046
20045
20030
20007
20042
20040
20032
20030
20013
20010
20007
20006
20031
20044
20043
20017
20047
20042
20043

FIG. 256

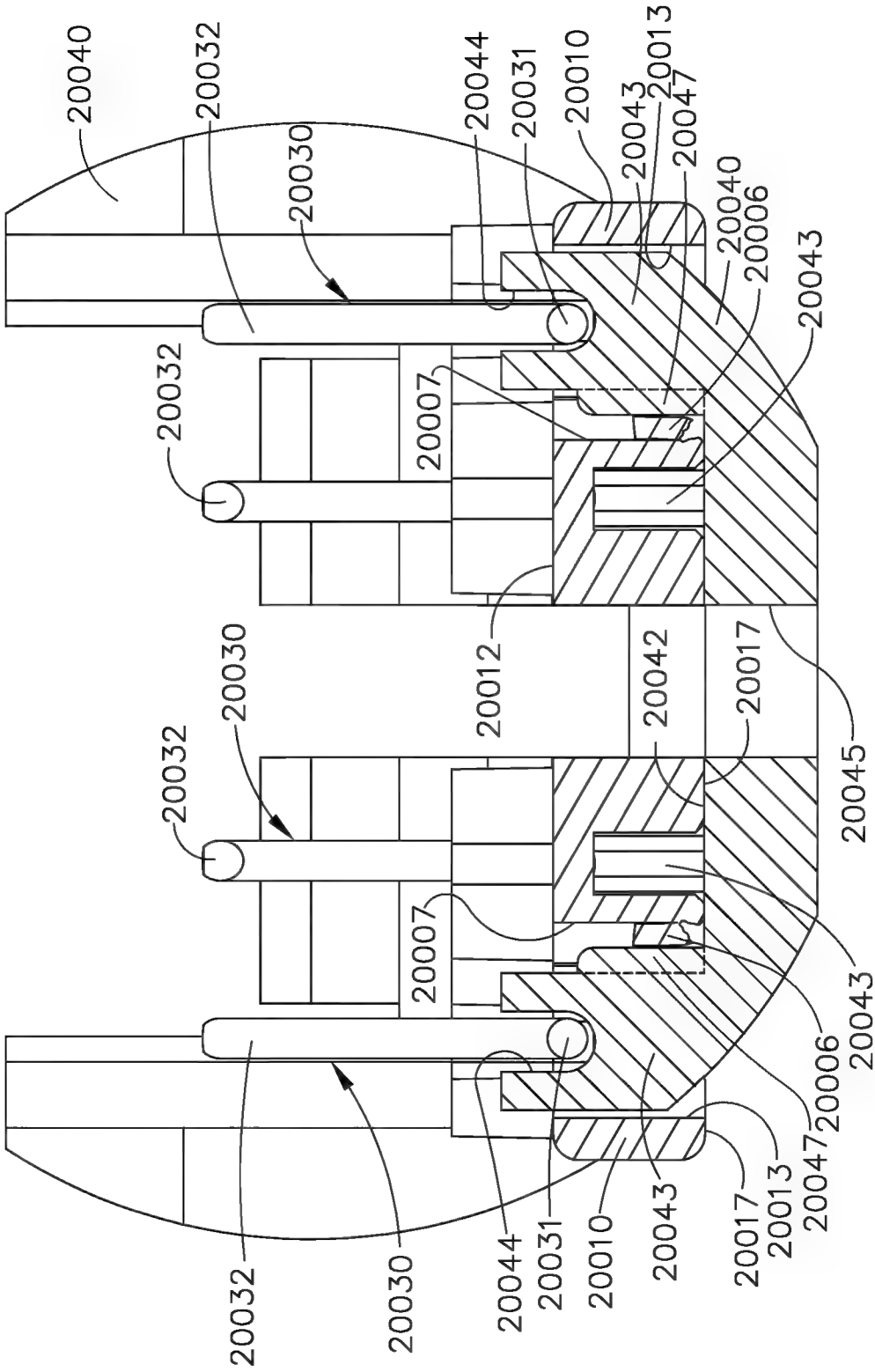
20040
20032
20030
20044
20031
20010
20043
20013
20047
20040
20006
20043
20032
20007
20012
20042
20017
20045
20030
20032
20007
20043
20006
20047
20013
20017
20043
20010
20031
20044
20030
20032

FIG. 257

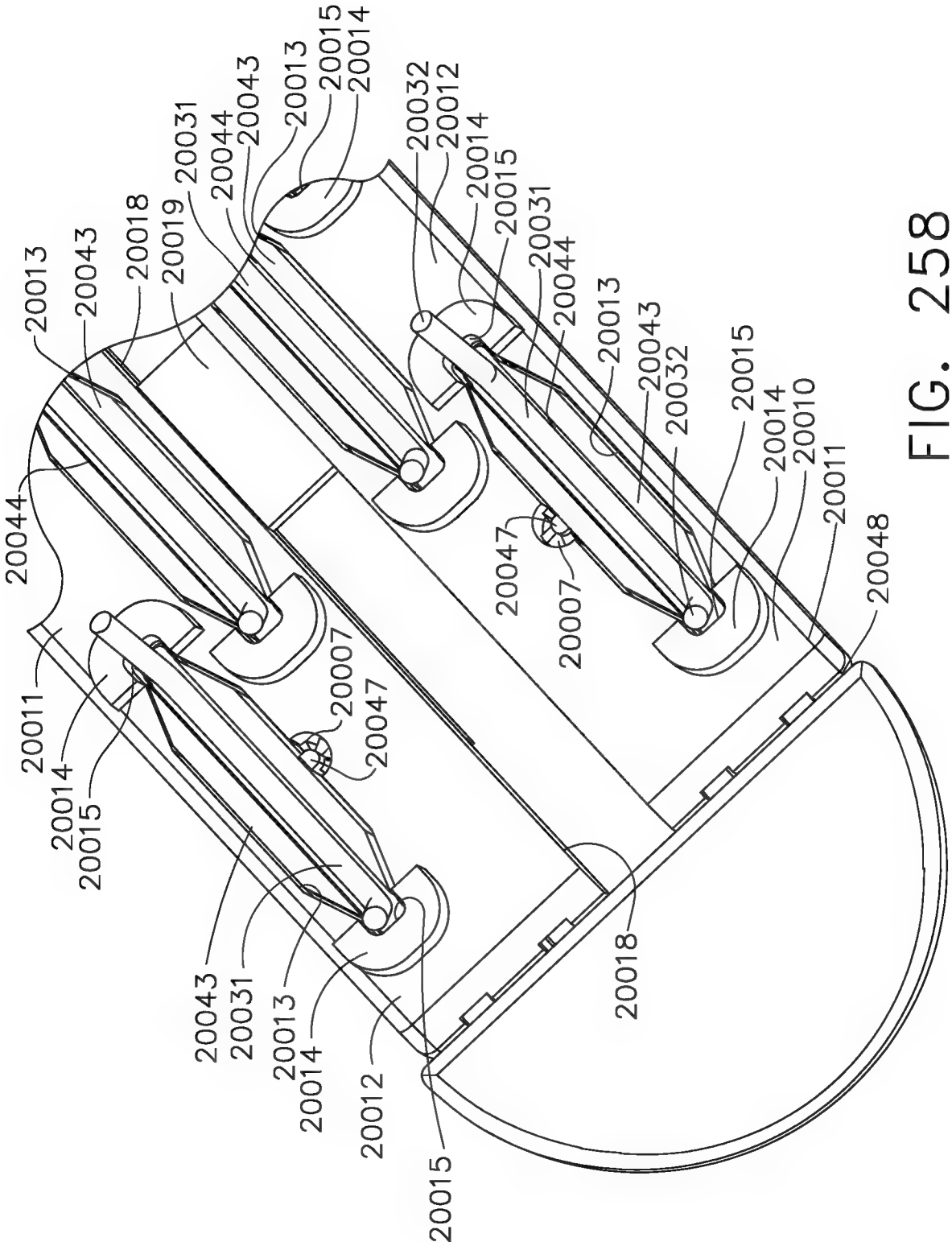
20013
20043
20018
20019
20031
20044
20043
20013
20015
20014
20032
20012
20014
20015
20031
20044
20013
20043
20032
20015
20014
20010
20011
20048
20044
20011
20014
20015
20007
20047
20047
20007
20018
20043
20031
20013
20014
20012
20015

FIG. 258

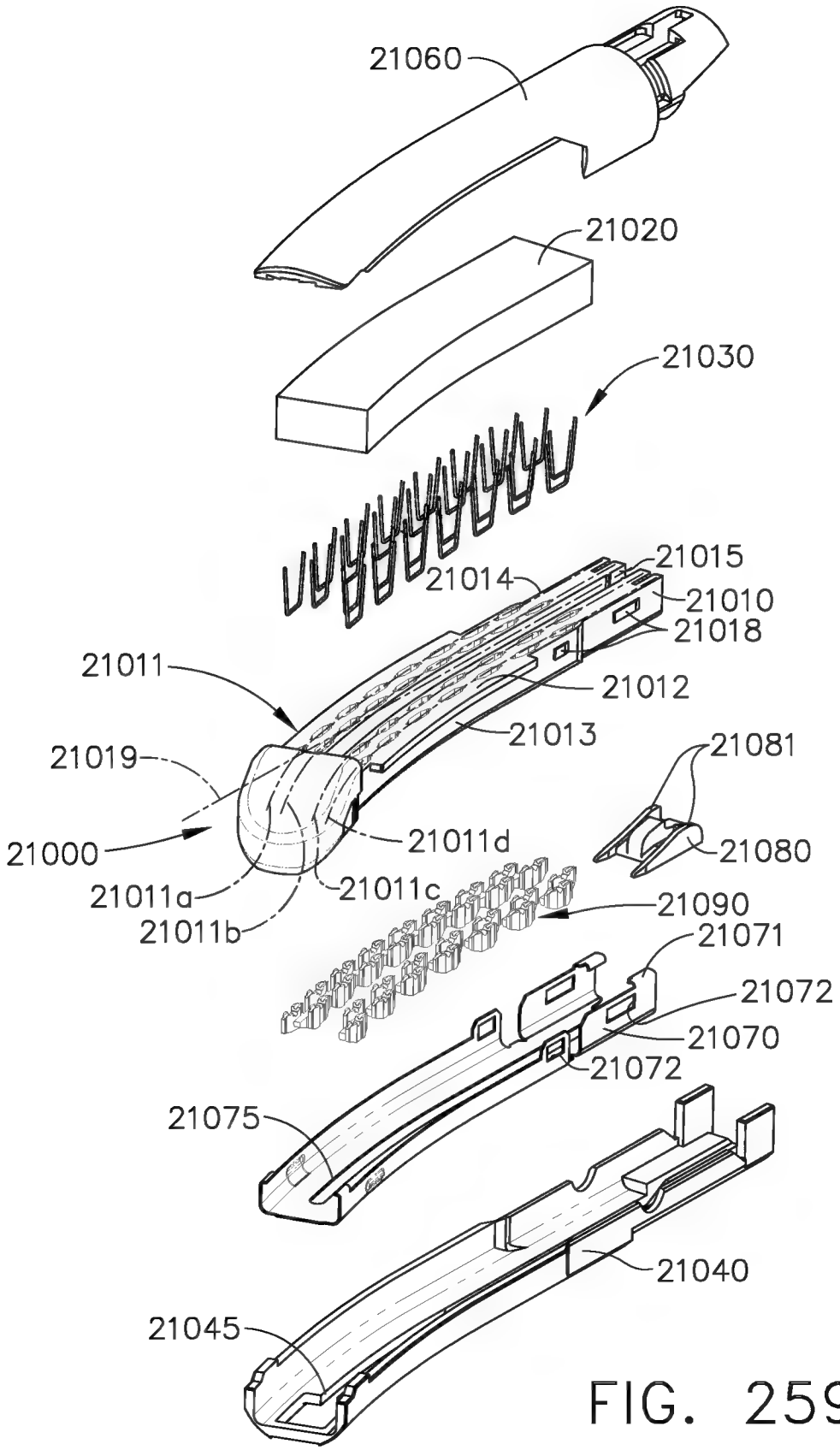
21060
21020
21030
21015
21014
21010
21018
21011
21012
21013
21019
21081
21000
21011d
21080
21011a
21011c
21090
21011b
21071
21072
21070
21072
21075
21040
21045

FIG. 259

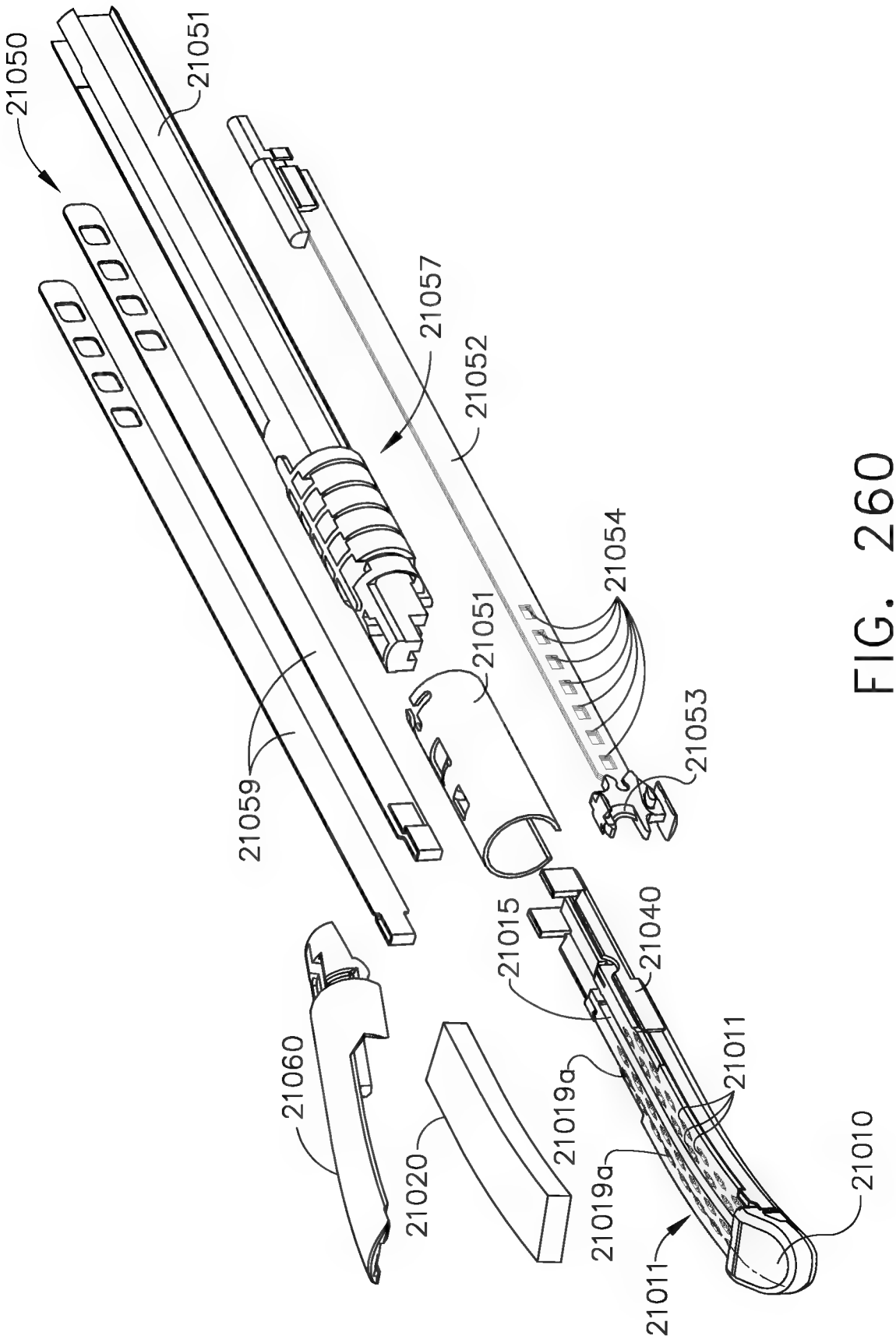
21050
21051
21057
21052
21054
21051
21053
21059
21015
21040
21060
21011
21020
21019a
21019a
21010
21011

FIG. 260

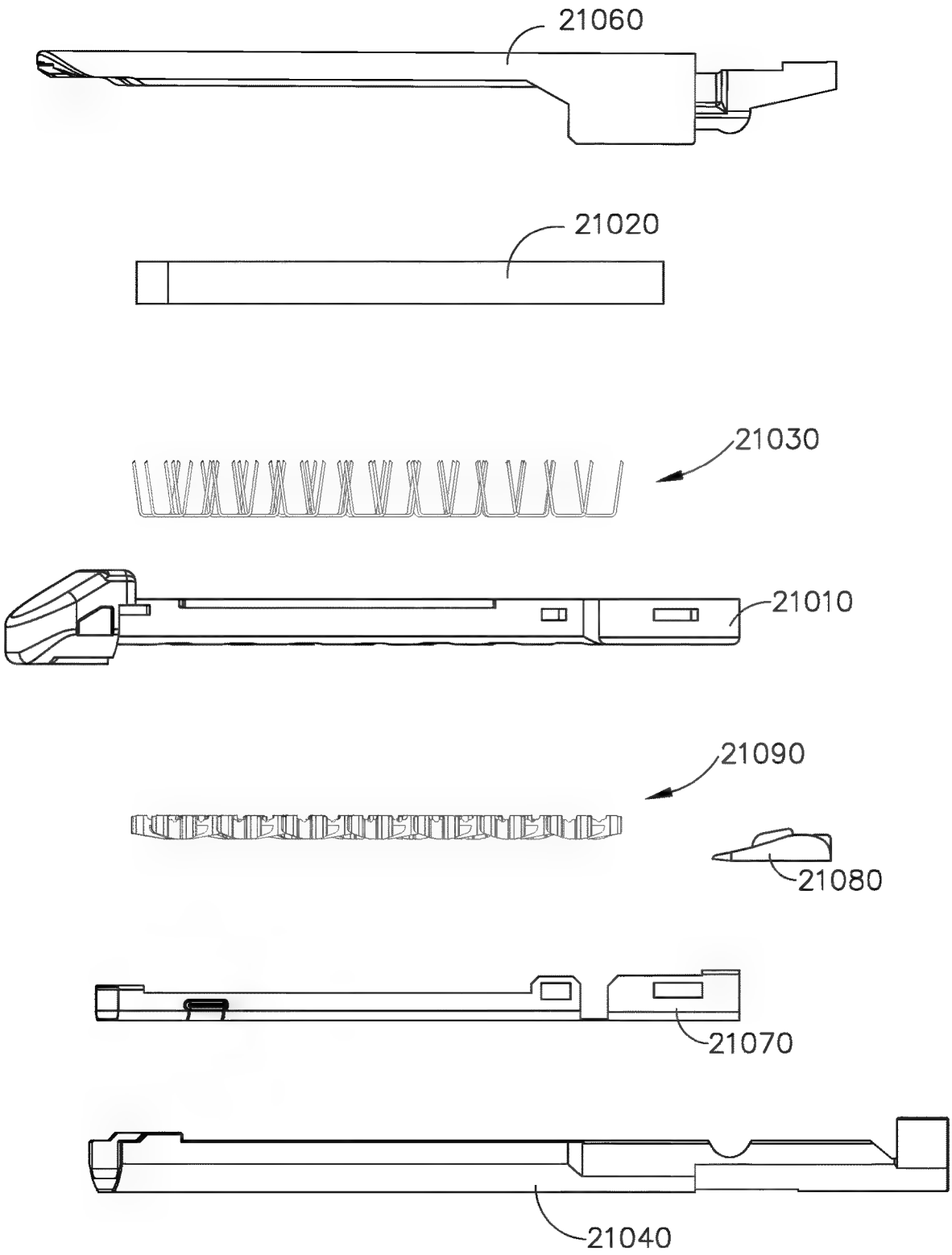

FIG. 261

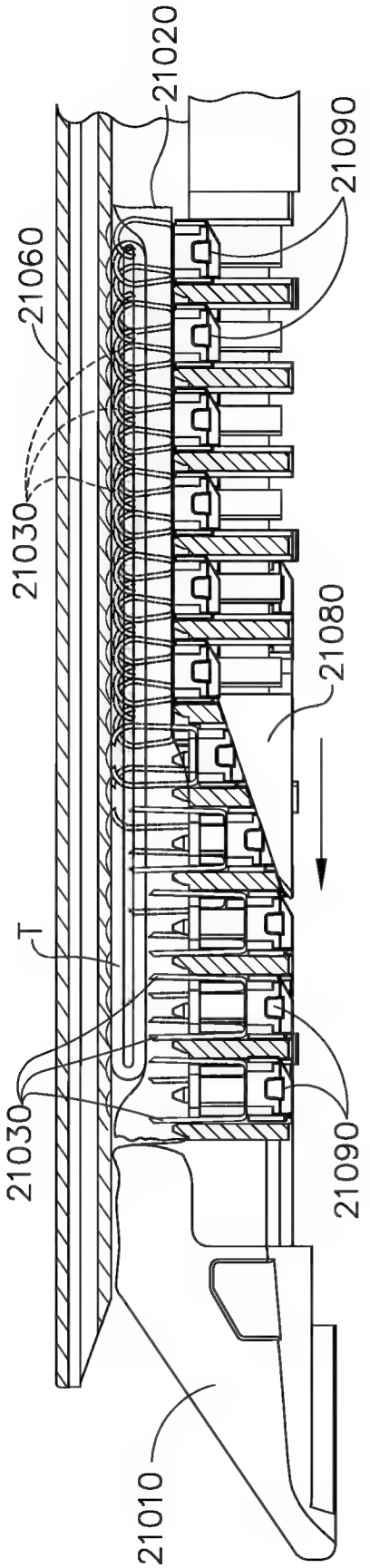

FIG. 262

SURGICAL STAPLER WITH FLOATING ANVIL

CROSS-REFERENCE TO RELATED APPLICATIONS

This application is a continuation application claiming priority under 35 U.S.C. § 120 to U.S. patent application Ser. No. 15/793,382, entitled SURGICAL STAPLER WITH FLOATING ANVIL, filed Oct. 25, 2017, which issued on Aug. 18, 2020 as U.S. Pat. No. 10,743,877, which is a continuation application claiming priority under 35 U.S.C. § 120 to U.S. patent application Ser. No. 14/549,219, entitled SURGICAL STAPLER WITH FLOATING ANVIL, filed Nov. 20, 2014, which issued on Sep. 4, 2018 as U.S. Pat. No. 10,064,624, which is continuation-in-part application claiming priority under 35 U.S.C. § 120 to U.S. patent application Ser. No. 13/097,856, entitled STAPLE CARTRIDGE COMPRISING STAPLES POSITIONED WITHIN A COMPRESSIBLE PORTION THEREOF, filed Apr. 29, 2011, now U.S. Patent Application Publication No. 2012/0080336, which is a continuation-in-part application under 35 U.S.C. § 120 of U.S. patent application Ser. No. 12/894,369, entitled IMPLANTABLE FASTENER CARTRIDGE COMPRISING A SUPPORT RETAINER, filed on Sep. 30, 2010, now U.S. Patent Application Publication No. 2012/0080344, the entire disclosures of which are hereby incorporated by reference herein. U.S. patent application Ser. No. 15/793,382, entitled SURGICAL STAPLER WITH FLOATING ANVIL, filed Oct. 25, 2017, which issued on Aug. 18, 2020 as U.S. Pat. No. 10,743,877, is a continuation application claiming priority under 35 U.S.C. § 120 to U.S. patent application Ser. No. 14/549,219, entitled SURGICAL STAPLER WITH FLOATING ANVIL, filed Nov. 20, 2014, which issued on Sep. 4, 2018 as U.S. Pat. No. 10,064,624, which is a continuation-in-part application claiming priority under 35 U.S.C. § 120 to U.S. patent application Ser. No. 13/242,029, entitled SURGICAL STAPLER WITH FLOATING ANVIL, filed Sep. 23, 2011, which issued on Nov. 25, 2014 as U.S. Pat. No. 8,893,949, which is a continuation-in-part application under 35 U.S.C. § 120 of U.S. patent application Ser. No. 12/894,369, entitled IMPLANTABLE FASTENER CARTRIDGE COMPRISING A SUPPORT RETAINER, filed on Sep. 30, 2010, now U.S. Patent Application Publication No. 2012/0080344, the entire disclosures of which are hereby incorporated by reference herein.

BACKGROUND

Technical Field

The present invention relates to surgical instruments and, in various embodiments, to surgical cutting and stapling instruments and staple cartridges therefor that are designed to cut and staple tissue.

Background

Endoscopic surgical instruments are often preferred over traditional open surgical devices since a smaller incision tends to reduce the post-operative recovery time and complications. Consequently, significant development has gone into a range of endoscopic surgical instruments that are suitable for precise placement of a distal end effector at a desired surgical site through a cannula of a trocar. These distal end effectors engage the tissue in a number of ways to achieve a diagnostic or therapeutic effect (e.g., endocutter, grasper, cutter, staplers, clip applier, access device, drug/gene therapy delivery device, and energy device using ultrasound, RF, laser, etc.).

In many endoscopic surgical applications, it is desirable to employ end effectors that are only as large as necessary to complete a particular surgical procedure. Smaller end effectors provide better visualization of the surgical site. Smaller end effectors also allow for better access and manipulation in tight spaces. Designers of such end effectors face many challenges when trying to develop small end effectors. The ability to manufacture small end effectors and, more particularly, small endocutters that are designed to cut and staple tissue is hampered by the magnitude of the actuation forces that are generally required to form lines of staples and cut tissue. Such actuation forces can also vary with the thickness and composition of the tissue being treated. For example, larger actuation forces are commonly required to cut and staple thick tissues. Whereas, the magnitude of the actuation forces required to cut and staple thinner tissues in general are smaller. Thus, many existing endocutters typically employ robust anvil closure systems and staple driving systems that are configured to accommodate a specific range of tissue thicknesses. Such devices, however, are often not well-suited for treating thinner tissues.

Prior endocutter devices also generally cut the tissue as the staples are driven and formed in the tissue on each side of the cut. While such devices are very effective for those procedures that require the tissue to be cut and fastened, they do not provide the surgeon with the option of installing fasteners without cutting tissue. Likewise, while various forms of articulating endocutters have been developed to improve access, the components generally employed in such devices must be substantial enough to accommodate structures that can generate and transmit sufficient firing and closure forces to the end effector from the handle of the device. Thus, such end effectors are often too large to effectively access tight spaces in the body.

Accordingly, there is a need for surgical cutting and stapling instruments and staple cartridge arrangements that address many of the challenges discussed above.

The foregoing discussion is intended only to illustrate some of the shortcomings present in the field of the invention at the time, and should not be taken as a disavowal of claim scope.

BRIEF DESCRIPTION OF DRAWINGS

The above-mentioned and other features and advantages of this invention, and the manner of attaining them, will become more apparent and the invention itself will be better understood by reference to the following description of embodiments of the invention taken in conjunction with the accompanying drawings, wherein:

FIG. **1** is a cross-sectional view of a surgical instrument embodiment of the present invention;

FIG. **1**A is a perspective view of one embodiment of an implantable staple cartridge of the present invention;

FIG. **1**B-**1**E illustrate portions of an end effector of various embodiments of the present invention clamping and stapling tissue with an implantable staple cartridge embodiment of the present invention;

FIG. **2** is an exploded assembly view of an end effector embodiment and a portion of a surgical stapling instrument embodiment of the present invention shown in cross-section;

FIG. **3** is a side elevational view of an anvil embodiment of the present invention;

FIG. **4** is a is a cross-sectional view of a portion of the handle assembly depicted in FIG. **1**;

FIG. **5** is a partial cross-sectional view of the handle assembly of FIG. **1** taken along line **5-5** in FIG. **1**;

FIG. **6** is a perspective view of a portion of firing transmission embodiment of the present invention;

FIG. **7** is a partial cross-sectional view of the handle assembly of FIG. **1** taken along line **7-7** in FIG. **1**;

FIG. **8** is a partial cross-sectional view of a portion of the handle assembly of FIG. **7** taken along line **8-8**-in FIG. **7**;

FIG. **9** is a cross-sectional view of a surgical instrument embodiment of the present invention after an end effector has been coupled to a spine portion of the surgical instrument and prior to being locked thereto;

FIG. **9**A is an enlarged view of the end effector and a portion of the surgical instrument of FIG. **10**;

FIG. **10** is a cross-sectional view of the surgical instrument of FIG. **9** after the end effector has been locked to the spine portion of the surgical instrument;

FIG. **10**A is an enlarged view of the end effector and a portion of the surgical instrument of FIG. **10**;

FIG. **11** is a cross-sectional view of the surgical instrument of FIGS. **9** and **10** after the first firing adapter has been advanced to the beginning of the clamping ramp portions of the anvil;

FIG. **11**A is an enlarged view of the end effector and a portion of the surgical instrument of FIG. **11** with tissue received between the anvil and staple cartridge thereof;

FIG. **12** is a is a cross-sectional view of the surgical instrument of FIGS. **9-11** after the first firing adapter has been advanced over the clamping ramp portions of the anvil;

FIG. **12**A is an enlarged view of the end effector and a portion of the surgical instrument of FIG. **12**;

FIG. **13** is a cross-sectional view of the surgical instrument of FIGS. **9-12** after the first firing adapter has been advanced over the staple forming ramp to fully form the staples within the implantable staple cartridge;

FIG. **13**A is an enlarged view of the end effector and a portion of the surgical instrument of FIG. **13**;

FIG. **14** is a cross-sectional view of the surgical instrument of FIGS. **9-13** after the first firing adapter has been advanced over the staple forming ramp to fully form the staples within the implantable staple cartridge and after the knife bar has been longitudinally advanced through the end effector;

FIG. **14**A is an enlarged view of the end effector and a portion of the surgical instrument of FIG. **14**;

FIG. **15** is an exploded view of another end effector embodiment of the present invention with a portion of the spine member of a surgical instrument embodiment of the present invention shown in cross-section;

FIG. **16** is a partial cross-sectional view of the end effector embodiment of FIG. **15** in the open position and attached to the surgical instrument embodiment;

FIG. **17** is another partial cross-sectional view of the end effector embodiment of FIGS. **15** and **16** in the fully clamped position;

FIG. **18** is another partial cross-sectional view of the end effector embodiment of FIGS. **15-17** in the fully fired position and prior to advancement of the distal knife member;

FIG. **19** is another partial cross-sectional view of the end effector embodiment of FIGS. **15-18** in the fully fired position and after complete advancement of the distal knife member;

FIG. **20** is a cross-sectional view of a portion of another handle assembly embodiment of the present invention;

FIG. **21** is a partial cross-sectional view of a portion of the handle assembly of FIG. **20** taken along line **21-21** in FIG. **20**;

FIG. **22** is a partial cross-sectional view of a portion of the handle assembly of FIG. **20** taken along line **22-22** in FIG. **20**;

FIG. **23** is a partial cross-sectional view of a portion of the handle assembly of FIG. **20** taken along line **23-23** in FIG. **20**;

FIG. **24** is a cross-sectional view of a portion of another handle assembly embodiment of the present invention;

FIG. **25** is a partial cross-sectional side view of another end effector embodiment of the present invention coupled to a portion of a surgical instrument embodiment of the present invention with the end effector supporting a surgical staple cartridge embodiment of the present invention and with the anvil thereof in an open position;

FIG. **26** is another partial cross-sectional side view of the end effector of FIG. **25** in a closed position;

FIG. **27** is another partial cross-sectional side view of the end effector of FIGS. **25** and **26** as the knife bar is starting to advance through the end effector;

FIG. **28** is another partial cross-sectional side view of the end effector of FIGS. **25-27** with the knife bar partially advanced therethrough;

FIG. **29** is a partial cross-sectional side view of another end effector embodiment of the present invention coupled to a portion of a surgical instrument embodiment of the present invention with the end effector supporting another surgical staple cartridge embodiment of the present invention and with the anvil thereof in an open position;

FIG. **30** is another partial cross-sectional side view of the end effector of FIG. **29** with the knife bar partially advanced therethrough;

FIG. **31** is a cross-sectional view of another surgical instrument embodiment of the present invention with the anvil of the end effector thereof in an open position;

FIG. **32** is an exploded assembly view of the end effector embodiment and a portion of the surgical stapling instrument embodiment of FIG. **31** shown in cross-section;

FIG. **33** is a top view of the end effector and a portion of the elongated shaft assembly of the surgical instrument of FIG. **31** with portions thereof shown in cross-section taken along line **33-33** in FIG. **31**;

FIG. **34** is a top view of the end effector and a portion of the elongated shaft assembly of the surgical instrument of FIG. **31** with portions thereof shown in cross-section;

FIG. **35** is another top view of the end effector and a portion of the elongated shaft assembly of the surgical instrument of FIG. **31** with the end effector in articulated orientation and with the end effector in an open position;

FIG. **36** is another top view of the end effector of FIG. **35** with the end effector in a closed or clamped position;

FIG. **37** is an enlarged view of a portion of the end effector and surgical instrument embodiment depicted in FIG. **36**;

FIG. **38** is a cross-sectional view of a portion of the handle assembly of the surgical instrument of FIG. **31**;

FIG. **39** is another cross-sectional view of the portion of the handle assembly of FIG. **38** taken along line **39-39** in FIG. **38**;

FIG. **40** is a partial perspective exploded view of an articulation ball and socket arrangement of various embodiments of the present invention;

FIG. **41** is a top view of an end effector and a portion of an elongated shaft assembly of another surgical instrument embodiment of the present invention in an unarticulated orientation;

FIG. **42** is another top view of the end effector and portion of elongated shaft assembly of FIG. **41** in an articulated position;

FIG. **43** is cross-sectional view of another surgical instrument embodiment of the present invention;

FIG. **44** is partial cross-sectional view of a portion of the articulated shaft assembly of the surgical instrument embodiment of FIG. **43**;

FIG. **44**A is a cross-sectional view of a portion of the articulated shaft assembly of FIG. **44**;

FIG. **44**B is another cross-sectional view of another portion of the articulated shaft assembly of FIG. **44**;

FIG. **44**C is another cross-sectional view of another portion of the articulated shaft assembly of FIG. **44**;

FIG. **44**D is another cross-sectional view of another portion of the articulated shaft assembly of FIG. **44**;

FIG. **44**E is another cross-sectional view of another portion of the articulated shaft assembly of FIG. **44**;

FIG. **44**F is another cross-sectional view of another portion of the articulated shaft assembly of FIG. **44**;

FIG. **45** is a partial cross-sectional view of the articulated shaft assembly of FIG. **44** taken along line **45-45** in FIG. **44**;

FIG. **46** is a partial cross-sectional view of the articulated shaft assembly of FIG. **44** taken along line **46-46** in FIG. **44**;

FIG. **47** is another cross-sectional view of the surgical instrument of FIG. **43** with the end effector thereof shown in a fully articulated position;

FIG. **48** is a cross-sectional view of the end effector of FIG. **47** with a bellows-like cover extending over the articulation joint;

FIG. **49** is a cross-section view of a handle assembly of another surgical instrument embodiment of the present invention;

FIG. **50** is a cross-sectional exploded assembly view of an end effector and the distal end of the elongated shaft assembly of FIG. **49**;

FIG. **51** is another cross-sectional view of the end effector and portion of elongated shaft assembly of FIG. **50** with the end effector in an open position;

FIG. **52** is another cross-sectional view of the end effector and portion of the elongated shaft assembly with the end effector in a closed position;

FIG. **53** is another cross-sectional view of the end effector and portion of the elongated shaft of FIGS. **49-52** with the knife member in a fully fired position;

FIG. **54** is a perspective view of the end effector of FIGS. **51-53** in an open position;

FIG. **55** is a cross-sectional view of the end effector of FIGS. **51-54** taken along line **55-55** in FIG. **51**;

FIG. **56** is a partial perspective view of an elongated shaft assembly of another embodiment of the present invention attached to an end effector embodiment of the present invention;

FIG. **57** is a partial cross-sectional view of a handle assembly of another surgical instrument embodiment of the present invention;

FIG. **58** is a cross-sectional view of a portion of the elongated shaft assembly of FIGS. **56** and **57** taken along line **58-58** in FIG. **57**;

FIG. **59** is an enlarged view of a portion of the handle assembly of FIG. **57**;

FIG. **60** is a cross-sectional view of a distal end portion of the elongated shaft assembly of FIGS. **56-59**;

FIG. **61** is a partial perspective view of an elongated shaft assembly of another embodiment of the present invention attached to an end effector embodiment of the present invention;

FIG. **62** is a cross-sectional view of a portion of a reconfigurable shaft segment of the elongated shaft of FIG. **61**;

FIG. **63** is a partial perspective view of an elongated shaft assembly of another embodiment of the present invention attached to an end effector embodiment of the present invention;

FIG. **64** is a cross-sectional view of a handle assembly of another surgical instrument embodiment of the present invention;

FIG. **65** is a cross-sectional view of a portion of the elongated shaft assembly of FIGS. **63** and **64** taken along line **65-65** in FIG. **64**;

FIG. **66** is an enlarged view of a portion of the handle assembly of FIG. **64**;

FIG. **67** is a cross-sectional view of a portion of the reconfigurable shaft segment depicted in FIG. **63** with the tubular link portions thereof aligned in a substantially straight line;

FIG. **68** is a cross-sectional view of a portion of the reconfigurable shaft segment depicted in FIGS. **63** and **67** with the tubular link portions thereof aligned in a substantially curved (non-coaxial) orientation;

FIG. **69** is a perspective view of an alternative staple cartridge embodiment of the present invention installed in a surgical cutting and stapling device embodiment of the present invention;

FIG. **70** is a top view of the surgical staple cartridge and elongated channel of the device depicted in FIG. **69**;

FIG. **71** is a top view of another surgical staple cartridge embodiment of the present invention installed in an elongated channel of an end effector embodiment of the present invention;

FIG. **72** is a bottom view of an anvil embodiment of the present invention;

FIG. **73** is a partial perspective view of a plurality of staples forming a portion of a staple line embodiment of the present invention;

FIG. **74** is another partial perspective view of the staple line embodiment of FIG. **73** with the staples thereof after being formed by being contacted by the anvil of the surgical cutting and stapling device;

FIG. **75** is a partial perspective view of alternative staples forming a portion of another staple line embodiment of the present invention;

FIG. **76** is a partial perspective view of alternative staples forming a portion of another staple line embodiment of the present invention;

FIG. **77** is a partial perspective view of alternative staples forming a portion of another staple line embodiment of the present invention;

FIG. **78** is a cross-sectional view of an end effectors embodiment of the present invention supporting a staple cartridge embodiment of the present invention;

FIG. **79** is a cross-sectional view of the elongated channel portion of the end effector of FIG. **78** after the implantable staple cartridge body portion and staples have been removed therefrom;

FIG. **80** is a cross-sectional view of an end effectors embodiment of the present invention supporting another staple cartridge embodiment of the present invention;

FIG. **81** is a partial cross-sectional view of a surgical stapling instrument embodiment of the present invention with a staple cartridge supported in the end effector thereof to move the cartridge locking system to an unlocked position;

FIG. **82** is another partial cross-sectional view of the surgical stapling instrument of FIG. **81** with the staple cartridge being removed from the end effector and the cartridge locking system in a locked position;

FIGS. **83**A-**83**D diagram the deformation of a surgical staple positioned within a collapsible staple cartridge body in accordance with at least one embodiment;

FIG. **84**A is a diagram illustrating a staple positioned in a crushable staple cartridge body;

FIG. **84**B is a diagram illustrating the crushable staple cartridge body of FIG. **84**A being crushed by an anvil;

FIG. **84**C is a diagram illustrating the crushable staple cartridge body of FIG. **84**A being further crushed by the anvil;

FIG. **84**D is a diagram illustrating the staple of FIG. **84**A in a fully formed configuration and the crushable staple cartridge of FIG. **84**A in a fully crushed condition;

FIG. **85** is a diagram depicting a staple positioned against a staple cartridge support surface and illustrating potential relative movement therebetween;

FIG. **86** is a cross-sectional view of a staple cartridge support surface comprising a slot, or trough, configured to stabilize the base of the staple of FIG. **85**;

FIG. **87** is a cross-sectional view of a staple comprising an overmolded crown and a slot, or trough, configured to receive a portion of the crown in accordance with at least one alternative embodiment;

FIG. **88** is atop view of a staple cartridge in accordance with at least one embodiment comprising staples embedded in a collapsible staple cartridge body;

FIG. **89** is an elevational view of the staple cartridge of FIG. **88**;

FIG. **90** is an elevational view of a staple cartridge in accordance with at least one embodiment comprising a protective layer surrounding staples positioned within a collapsible staple cartridge body;

FIG. **91** is a cross-sectional view of the staple cartridge of FIG. **90** taken along line **91-91** in FIG. **90**;

FIG. **92** is an elevational view of a staple cartridge in accordance with at least one embodiment comprising staples at least partially extending outside of a collapsible staple cartridge body and a protective layer surrounding the staple cartridge body;

FIG. **93** is a cross-sectional view of the staple cartridge of FIG. **92** taken along line **93-93** in FIG. **92**;

FIG. **94** is a partial break-away view of a staple cartridge in accordance with at least one embodiment comprising staples at least partially embedded in a collapsible staple cartridge body, the staples being at least partially positioned in a staple cavity void in the staple cartridge body;

FIG. **95** is a cross-sectional view of the staple cartridge of FIG. **94** taken along line **95-95** in FIG. **94**;

FIG. **96** is a partial break-away view of a staple cartridge in accordance with at least one embodiment;

FIG. **97** is a partial break-away view of a staple cartridge in accordance with at least one embodiment comprising staples at least partially embedded within a collapsible staple cartridge body and an alignment matrix connecting the staples and aligning the staples with respect to each other;

FIG. **98** is a cross-sectional view of the staple cartridge of FIG. **97** taken along line **98-98** in FIG. **97**;

FIG. **99** is partial cut-away view of an inner layer of a compressible staple cartridge body;

FIG. **100** is a diagram illustrating the inner layer of FIG. **99** compressed between a transfer plate and a support plate;

FIG. **101** is a diagram illustrating staples being inserted into the compressed inner layer of FIG. **100**;

FIG. **102** is a diagram of the support plate of FIG. **100** being removed away from the inner layer;

FIG. **103** is a diagram of a subassembly comprising the inner layer of FIG. **99** and the staples of FIG. **101** being inserted into an outer layer;

FIG. **104** is a diagram illustrating the outer layer of FIG. **103** being sealed to form a sealed staple cartridge;

FIG. **105** is a cross-sectional view of the sealed staple cartridge of FIG. **104**;

FIG. **106** is a cross-sectional view of a staple cartridge and staple cartridge channel in accordance with at least one embodiment;

FIG. **107** is a diagram illustrating a portion of the staple cartridge of FIG. **106** in a deformed state;

FIG. **108** is an elevational view of an end effector of a surgical stapler comprising an anvil in an open position and a staple cartridge positioned within a staple cartridge channel;

FIG. **109** is an elevational view of the end effector of FIG. **108** illustrating the anvil in a closed position and the staple cartridge compressed between the anvil and the staple cartridge channel;

FIG. **110** is an elevational view of the end effector of FIG. **108** illustrating the staple cartridge of FIG. **108** positioned within the staple cartridge channel in an alternative manner;

FIG. **111** is a cross-sectional view of an end effector of a surgical stapler comprising a compressible staple cartridge positioned within a staple cartridge channel and a piece of buttress material attached to an anvil;

FIG. **112** is a cross-sectional view of the end effector of FIG. **111** illustrating the anvil in a closed position;

FIG. **113** is a cross-sectional view of an alternative embodiment of an end effector of a surgical stapler comprising a staple cartridge comprising a water impermeable layer;

FIG. **114** is a cross-sectional view of another alternative embodiment of an end effector of a surgical stapler;

FIG. **115** is a cross-sectional view of an alternative embodiment of an end effector of a surgical stapler comprising a stepped anvil and a staple cartridge comprising a stepped cartridge body;

FIG. **116** is a cross-sectional view of another alternative embodiment of an end effector of a surgical stapler;

FIG. **117** is a cross-sectional view of an alternative embodiment of an end effector of a surgical stapler comprising inclined tissue-contacting surfaces;

FIG. **118** is a cross-sectional view of another alternative embodiment of an end effector of a surgical stapler comprising inclined tissue-contacting surfaces;

FIG. **119** is a cross-sectional view of an alternative embodiment of an end effector of a surgical stapler comprising a support insert configured to support a staple cartridge;

FIG. **120** is a cross-sectional view of an alternative embodiment of an end effector of a surgical stapler comprising a staple cartridge comprising a plurality of compressible layers;

FIG. **121** is a cross-sectional view of an alternative embodiment of an end effector of a surgical stapler comprising a staple cartridge comprising a stepped compressible cartridge body;

FIG. **122** is a cross-sectional view of another alternative embodiment of an end effector of a surgical stapler comprising a staple cartridge comprising a stepped compressible cartridge body;

FIG. **123** is a cross-sectional view of an alternative embodiment of an end effector of a surgical stapler comprising a staple cartridge comprising a curved tissue-contacting surface;

FIG. **124** is a cross-sectional view of an alternative embodiment of an end effector of a surgical stapler comprising a staple cartridge having an inclined tissue-contacting surface;

FIG. **125** is a cross-sectional view of a compressible staple cartridge comprising staples and at least one medicament stored therein;

FIG. **126** is a diagram illustrating the compressible staple cartridge of FIG. **125** after it has been compressed and the staples contained therein have been deformed;

FIG. **127** is a partial cut-away view of a staple cartridge in accordance with at least one embodiment;

FIG. **128** is a cross-sectional view of the staple cartridge of FIG. **127**;

FIG. **129** is a perspective view of an implanted staple cartridge in accordance with at least one alternative embodiment;

FIG. **130** is a cross-sectional view of the implanted staple cartridge of FIG. **129**;

FIG. **131** is a perspective view of an alternative embodiment of a staple cartridge comprising deformable members extending from an outer layer of the staple cartridge;

FIG. **132** is a perspective view of an alternative embodiment of a staple cartridge comprising an outer layer of the staple cartridge being assembled to an inner layer;

FIG. **133** is a cross-sectional view of an alternative embodiment of a staple cartridge comprising a plurality of staples, a compressible layer, and a pledget layer;

FIG. **134** is a perspective view of the pledget layer of FIG. **133**;

FIG. **135** is a perspective view of a pledget singulated from the pledget layer of FIG. **133** and a staple aligned with a groove in the pledget;

FIG. **136** is a perspective view of two connected pledgets from the pledget layer of FIG. **133**;

FIG. **137** is a perspective view of a pledget support frame of the pledget layer of FIG. **133** being removed from the singulated pledgets;

FIG. **138** is an exploded perspective view of an alternative embodiment of a compressible staple cartridge comprising staples therein and a system for driving the staples against an anvil;

FIG. **138**A is a partial cut-away view of an alternative embodiment of the staple cartridge of FIG. **138**;

FIG. **139** is a cross-sectional view of the staple cartridge of FIG. **138**;

FIG. **140** is an elevational view of a sled configured to traverse the staple cartridge of FIG. **138** and move the staples to toward the anvil;

FIG. **141** is a diagram of a staple driver which can be lifted toward the anvil by the sled of FIG. **140**;

FIG. **142** is a break-away view of a staple cartridge in accordance with at least one alternative embodiment comprising staples positioned within staple drivers;

FIG. **143** is a cross-sectional view of the staple cartridge of FIG. **142** positioned within a staple cartridge channel;

FIG. **144** is a cross-sectional view of the staple cartridge of FIG. **142** illustrating an anvil moved into a closed position and staples contained within the staple cartridge deformed by the anvil;

FIG. **145** is a cross-sectional view of the staple cartridge of FIG. **142** illustrating the staples moved upwardly toward the anvil;

FIG. **146** is a perspective view of an alternative embodiment of a staple cartridge comprising straps connecting the flexible sides of the staple cartridge;

FIG. **147** is a perspective view of a sled and cutting member assembly;

FIG. **148** is a diagram of the sled and cutting member assembly of FIG. **147** being used to lift the staples of the staple cartridge of FIG. **142**;

FIG. **149** is a diagram illustrating a sled configured to engage and lift staples toward an anvil and a lock-out system configured to selectively permit the sled to move distally;

FIGS. **150**A-**150**C illustrate the progression of a staple being inserted into a staple crown;

FIG. **151** is a cross-sectional view of a staple cartridge comprising a support pan or retainer;

FIG. **152** is a partial cross-sectional view of a compressible staple cartridge in accordance with at least one alternative embodiment;

FIG. **153** is a diagram illustrating the staple cartridge of FIG. **152** in an implanted condition;

FIG. **154** is a partial cut-away view of a compressible staple cartridge in accordance with at least one alternative embodiment;

FIG. **155** is a partial cross-sectional view of the staple cartridge of FIG. **154**;

FIG. **156** is a diagram illustrating the staple cartridge of FIG. **154** in an implanted condition;

FIG. **157** is a partial cross-sectional view of a crushable staple cartridge in accordance with at least one alternative embodiment;

FIG. **158** is a partial cut-away view of a collapsible staple cartridge in accordance with at least one embodiment comprising a plurality of collapsible elements;

FIG. **159** is a perspective view of a collapsible element of FIG. **158** in an uncollapsed state;

FIG. **160** is a perspective view of the collapsible element of FIG. **159** in a collapsed state;

FIG. **161**A is a partial cross-sectional view of an end effector of a surgical stapling instrument comprising a jaw, a staple cartridge channel positioned opposite the jaw, and a staple cartridge positioned within the staple cartridge channel, wherein the jaw comprises a retention matrix attached thereto;

FIG. **161**B is a partial cross-sectional view of the end effector of FIG. **161**A illustrating the jaw being moved toward the staple cartridge channel, the staple cartridge being compressed by the anvil and the retention matrix, and a staple at least partially extending through tissue positioned intermediate the retention matrix and the staple cartridge;

FIG. **161**C is a partial cross-sectional view of the end effector of FIG. **161**A illustrating the jaw in a final position and the retention matrix engaged with the staple of FIG. **161**B;

FIG. **161**D is a partial cross-sectional view of the end effector of FIG. **161**A illustrating the jaw and the staple cartridge channel being moved away from the implanted staple cartridge and retention matrix;

FIG. **162** is a perspective view of a retention aperture of a retention matrix in accordance with at least one alternative embodiment comprising a plurality of retention members configured to engage a fastener leg extending therethrough;

FIG. **163** is a perspective view of a retention aperture of a retention matrix in accordance with at least one alternative embodiment comprising six retention members;

FIG. **164** is a perspective view of a retention aperture of a retention matrix in accordance with at least one alternative embodiment comprising eight retention members;

FIG. **165** is a perspective view of a retention aperture of a retention matrix in accordance with at least one alternative embodiment comprising a plurality of retention members configured to engage a fastener leg extending therethrough;

FIG. **166** is a perspective view of a retention aperture of a retention matrix in accordance with at least one alternative embodiment comprising six retention members;

FIG. **167** is a perspective view of a retention aperture of a retention matrix in accordance with at least one alternative embodiment comprising eight retention members;

FIG. **168** is a perspective view of a retention aperture of a retention matrix in accordance with at least one alternative embodiment comprising a plurality of retention members that have been stamped from a sheet of metal;

FIG. **169** is a perspective view of a retention aperture of a retention matrix in accordance with at least one alternative embodiment comprising a plurality of apertures extending around the perimeter of the retention aperture;

FIG. **170** is a top view of a retention aperture of a retention matrix in accordance with at least one alternative embodiment;

FIG. **171** is a top view of a retention aperture of a retention matrix in accordance with at least one alternative embodiment;

FIG. **172** is a top view of a retention aperture of a retention matrix in accordance with at least one alternative embodiment;

FIG. **173** is a top view of a retention aperture of a retention matrix in accordance with at least one alternative embodiment;

FIG. **174** is a top view of a retention aperture of a retention matrix in accordance with at least one alternative embodiment;

FIG. **175** is a top view of a retention aperture of a retention matrix comprising a retention tab extending into the retention aperture in accordance with at least one embodiment;

FIG. **176** is a top view of a retention aperture of a retention matrix comprising a retention tab extending into the retention aperture in accordance with at least one alternative embodiment;

FIG. **177** is a perspective view of a fastening system comprising a plurality of staples, a retention matrix engaged with the staples, and an alignment matrix configured to align the staples;

FIG. **178** is a perspective view of the retention matrix of FIG. **177**;

FIG. **179** is a perspective view of the alignment matrix of FIG. **177**;

FIG. **180** is a partial top view of the retention matrix of FIG. **177** engaged with the staples of FIG. **177**;

FIG. **181** is a partial bottom view of the retention matrix of FIG. **177** engaged with the staples of FIG. **177**;

FIG. **182** is a partial elevational view of the fastening system of FIG. **177**;

FIG. **183** is a partial perspective view of the fastening system of FIG. **177**;

FIG. **184** is a partial cross-sectional view of the retention matrix of FIG. **177** engaged with the staples of FIG. **177**;

FIG. **185** is a partial cross-sectional view of the fastening system of FIG. **177**;

FIG. **186** is a perspective view of the fastening system of FIG. **177** further comprising protective caps assembled to the legs of the staples;

FIG. **187** is a bottom perspective view of the fastening system arrangement of FIG. **186**;

FIG. **188** is a partial perspective view of the fastening system arrangement of FIG. **186**;

FIG. **189** is a partial cross-sectional view of the fastening system arrangement of FIG. **186**;

FIG. **190** is an elevational view of an end effector in accordance with at least one embodiment comprising a jaw in an open position, a retention matrix and a plurality of protective caps positioned in the jaw, and a staple cartridge positioned in a staple cartridge channel;

FIG. **191** is an elevational view of the end effector of FIG. **190** in a closed position;

FIG. **192** is an elevational view of the end effector of FIG. **190** in a fired position;

FIG. **193** is an elevational view of the retention matrix and protective caps of FIG. **190** assembled to the staple cartridge of FIG. **190**;

FIG. **194** is a detail view of the arrangement of FIG. **193**;

FIG. **195** is an elevational view of the end effector of FIG. **190** illustrating the jaw in an open position with thinner tissue positioned between the retention matrix and the staple cartridge;

FIG. **196** is an elevational view of the end effector of FIG. **190** illustrating the jaw in a closed position against the thinner tissue of FIG. **195**;

FIG. **197** is an elevational view of the end effector of FIG. **190** illustrating the jaw in a fired position to capture the thinner tissue of FIG. **195** between the retention matrix and the staple cartridge;

FIG. **198** is an elevational view of the retention matrix and the protective caps of FIG. **190** assembled to the staple cartridge of FIG. **190** with the thin tissue of FIG. **195** positioned therebetween;

FIG. **199** is a detail view of the arrangement of FIG. **198**;

FIG. **200** is a cross-sectional view of a protective cap positioned on the tip of a staple leg in accordance with at least one alternative embodiment;

FIG. **201** is a perspective view of a plurality of protective caps embedded within a sheet of material;

FIG. **202** is a perspective view of a jaw comprising a plurality of recesses configured to receive a plurality of protective caps therein;

FIG. **203** is a detail view of a portion of a jaw comprising a sheet covering the protective caps positioned within the jaw of FIG. **202**;

FIG. **204** is a cross-sectional view of a protective cap positioned on a tip of a staple leg in accordance with at least one alternative embodiment wherein the protective cap comprises an interior forming surface;

FIG. **205** is another cross-sectional view of the protective cap of FIG. **204** illustrating the staple leg being deformed against the forming surface;

FIG. **206** is a top view of an alternative embodiment of a retention matrix comprising a plurality of connected matrix elements;

FIG. **207** is a top view of an alternative embodiment of a retention matrix comprising a plurality of connected matrix elements;

FIG. **208** is a top view of an alternative embodiment of a retention matrix comprising a plurality of connected matrix elements;

FIG. **209** is a top view of an alternative embodiment of an array of retention matrices comprising a plurality of connected matrix elements;

FIG. **210** is atop view of an alternative embodiment of a retention matrix comprising a plurality of connected matrix elements;

FIG. **211** is a partial exploded view of a jaw comprising a retention matrix including a compressible cover;

FIG. **212** is a detail view of the retention matrix of FIG. **211**;

FIG. **213** is a partial cross-sectional view of a fastening system comprising a retention matrix including a compressible layer and a plurality of cells encapsulating one or more medicaments;

FIG. **214** is a diagram illustrating staple legs which have pierced the cells of FIG. **213** as they are being engaged with the retention matrix;

FIG. **215** is a partial cross-sectional view of a fastening system comprising a retention matrix including a compressible layer;

FIG. **216** is an elevational view of a fastener cartridge insertion assembly comprising a holder, a first fastener cartridge, and a second fastener cartridge;

FIG. **217** is an elevational view of an end effector of a surgical stapler comprising a first jaw and a second jaw, the second jaw being illustrated in an open configuration;

FIG. **218** is an elevational view of the end effector of FIG. **217** illustrating the second jaw in a closed configuration and the fastener cartridge insertion assembly of FIG. **216** being used to load the first jaw with the first cartridge and the second jaw with the second cartridge;

FIG. **219** is an elevational view of the loaded end effector of FIG. **218** illustrating the cartridge insertion assembly removed from the end effector, the second jaw in an open configuration once again, and tissue positioned intermediate the first jaw and the second jaw;

FIG. **220** is an elevational view of the loaded end effector of FIG. **219** in a fired configuration;

FIG. **221** is an elevational view of the first cartridge and the second cartridge in an implanted condition;

FIG. **222** is an elevational view of the end effector of FIG. **217** illustrating a portion of the first cartridge still engaged with the first jaw in accordance with at least one embodiment;

FIG. **223** is an elevational view of an alternative embodiment of a fastener cartridge insertion assembly comprising a holder, a first fastener cartridge, and a second fastener cartridge;

FIG. **224** is an elevational view of the fastener cartridge insertion assembly of FIG. **223** being used to load a first jaw of an end effector with the first cartridge and a second jaw with the second cartridge;

FIG. **225** is a cross-sectional view of the loaded end effector of FIG. **224**;

FIG. **226** is a perspective view of a surgical stapler comprising a bottom jaw and a top jaw in accordance with at least one embodiment illustrated with portions of the surgical stapler removed;

FIG. **227** is a perspective view of the surgical stapler of FIG. **226** with the top jaw removed;

FIG. **228** is a perspective view of a slidable anvil system of the top jaw of the surgical stapler of FIG. **226** comprising a first slidable anvil and a second slidable anvil;

FIG. **229** is an end view of the slidable anvil system of FIG. **228**;

FIG. **230** is a top view of the slidable anvil system of FIG. **228**;

FIG. **231** is a diagram illustrating the slidable anvil system of FIG. **228** in an unfired condition;

FIG. **232** is a diagram illustrating the first slidable anvil of the slidable anvil system of FIG. **228** in an unfired position and staples positioned within the bottom jaw in an undeployed position;

FIG. **233** is a diagram illustrating the staples in the bottom jaw in a deployed configuration and the first slidable anvil of FIG. **232** being pulled proximally to deform a first group of staple legs of the staples;

FIG. **234** is a diagram illustrating the first group of staples of FIG. **233** deformed to a fully deformed state;

FIG. **235** is a diagram illustrating the second slidable anvil of the slidable anvil system of FIG. **228** being pushed distally to deform a second group of staple legs;

FIG. **236** is a partial perspective view of an anvil comprising a plurality of forming pockets in at least one embodiment;

FIG. **237** is a cross-sectional end view of the anvil of FIG. **236**;

FIG. **238** is a diagram illustrating a first step in manufacturing the forming pockets of FIG. **236**;

FIG. **239** is a diagram illustrating a second step in manufacturing the forming pockets of FIG. **236**;

FIG. **240** is a top view of the forming pocket arrangement of the anvil of FIG. **236**;

FIG. **241** is a diagram illustrating a first step of a manufacturing process for producing an anvil;

FIG. **242** is a diagram illustrating a second step in the manufacturing process of FIG. **241**;

FIG. **243** is a diagram illustrating a third step in the manufacturing process of FIG. **241**;

FIG. **244** is an exploded view of a shaft and an end effector of a surgical stapling instrument illustrated with a staple cartridge positioned within the end effector in accordance with at least one embodiment;

FIG. **245** is an exploded view of the end effector and staple cartridge of FIG. **244**;

FIG. **246** is a perspective view of a support jaw of the end effector and the staple cartridge of FIG. **244** illustrated with some components removed;

FIG. **247** is a cross-sectional elevational view of the end effector of FIG. **244** illustrated in an open configuration with a vessel positioned between the staple cartridge and an anvil jaw of the end effector;

FIG. **248** is a cross-sectional elevational view of the end effector of FIG. **244** illustrated in a partially closed configuration;

FIG. **249** is a cross-sectional elevational view of the end effector of FIG. **244** illustrated in a closed and at least partially fired configuration;

FIG. **250** is a cross-sectional elevational view of the end effector of FIG. **244** illustrated in a fully fired configuration;

FIG. **251** is a cross-sectional perspective view of the end effector of FIG. **244** illustrated in an at least partially closed, unfired configuration;

FIG. **252** is a cross-sectional perspective view of the end effector of FIG. **244** illustrated in closed, partially fired configuration;

FIG. **253** is a cross-sectional end view of the end effector of FIG. **244** illustrated in an open configuration;

FIG. **254** is a cross-sectional end view of the end effector of FIG. **244** illustrated in an at least partially closed configuration;

FIG. **255** is a cross-sectional end view of the end effector of FIG. **244** illustrated in a fired configuration;

FIG. **256** is a cross-sectional end view of the end effector of FIG. **244** illustrated in an unfired configuration with some components removed;

FIG. **257** is a cross-sectional end view of the end effector of FIG. **244** illustrated in a fired configuration with some components removed;

FIG. **258** is a top perspective view of the end effector of FIG. **244**;

FIG. **259** is an exploded view of an end effector of a surgical stapling instrument and a staple cartridge in accordance with at least one embodiment;

FIG. **260** is an exploded view of the end effector and a shaft of the surgical stapling instrument of FIG. **259**;

FIG. **261** is an exploded elevational view of the end effector of FIG. **259**; and

FIG. **262** is cross-sectional elevational view of the end effector of FIG. **259** illustrated in a partially fired configuration.

Corresponding reference characters indicate corresponding parts throughout the several views. The exemplifications set out herein illustrate preferred embodiments of the invention, in one form, and such exemplifications are not to be construed as limiting the scope of the invention in any manner.

DETAILED DESCRIPTION

The Applicant of the present application also owns the U.S. Patent Applications identified below which are each herein incorporated by reference in their respective entirety:

U.S. patent application Ser. No. 12/894,360, entitled SURGICAL STAPLING INSTRUMENT WITH A VARIABLE STAPLE FORMING SYSTEM, now U.S. Pat. No. 9,113,862;

U.S. patent application Ser. No. 12/894,322, entitled SURGICAL STAPLING INSTRUMENT WITH INTERCHANGEABLE STAPLE CARTRIDGE ARRANGEMENTS, now U.S. Pat. No. 8,740,034;

U.S. patent application Ser. No. 12/894,351, entitled SURGICAL CUTTING AND FASTENING INSTRUMENTS WITH SEPARATE AND DISTINCT FASTENER DEPLOYMENT AND TISSUE CUTTING SYSTEMS, now U.S. Pat. No. 9,113,864;

U.S. patent application Ser. No. 12/894,339, entitled SURGICAL STAPLING INSTRUMENT WITH COMPACT ARTICULATION CONTROL ARRANGEMENT, now U.S. Pat. No. 8,840,003;

U.S. patent application Ser. No. 12/894,327, entitled JAW CLOSURE ARRANGEMENTS FOR SURGICAL INSTRUMENTS, now U.S. Pat. No. 8,978,956;

U.S. patent application Ser. No. 12/894,311, entitled SURGICAL INSTRUMENTS WITH RECONFIGURABLE SHAFT SEGMENTS, now U.S. Pat. No. 8,763,877;

U.S. patent application Ser. No. 12/894,340, entitled SURGICAL STAPLE CARTRIDGES SUPPORTING NON-LINEARLY ARRANGED STAPLES AND SURGICAL STAPLING INSTRUMENTS WITH COMMON STAPLE-FORMING POCKETS, now U.S. Pat. No. 8,899,463;

U.S. patent application Ser. No. 12/894,350, entitled SURGICAL STAPLE CARTRIDGES WITH DETACHABLE SUPPORT STRUCTURES AND SURGICAL STAPLING INSTRUMENTS WITH SYSTEMS FOR PREVENTING ACTUATION MOTIONS WHEN A CARTRIDGE IS NOT PRESENT, now U.S. Patent Application Publication No. 2012/0080478;

U.S. patent application Ser. No. 12/894,338, entitled IMPLANTABLE FASTENER CARTRIDGE HAVING A NON-UNIFORM ARRANGEMENT, now U.S. Pat. No. 8,864,007;

U.S. patent application Ser. No. 12/894,312, entitled IMPLANTABLE FASTENER CARTRIDGE COMPRISING MULTIPLE LAYERS, now U.S. Pat. No. 8,925,782;

U.S. patent application Ser. No. 12/894,377, entitled SELECTIVELY ORIENTABLE IMPLANTABLE FASTENER CARTRIDGE, now U.S. Pat. No. 8,393,514;

U.S. patent application Ser. No. 12/894,383, entitled IMPLANTABLE FASTENER CARTRIDGE COMPRISING BIOABSORBABLE LAYERS, now U.S. Pat. No. 8,752,699;

U.S. patent application Ser. No. 12/894,389, entitled COMPRESSIBLE FASTENER CARTRIDGE, now U.S. Pat. No. 8,740,037;

U.S. patent application Ser. No. 12/894,345, entitled FASTENERS SUPPORTED BY A FASTENER CARTRIDGE SUPPORT, now U.S. Pat. No. 8,783,542;

U.S. patent application Ser. No. 12/894,306, entitled COLLAPSIBLE FASTENER CARTRIDGE, now U.S. Pat. No. 9,044,227;

U.S. patent application Ser. No. 12/894,318, entitled FASTENER SYSTEM COMPRISING A PLURALITY OF CONNECTED RETENTION MATRIX ELEMENTS, now U.S. Pat. No. 8,814,024;

U.S. patent application Ser. No. 12/894,330, entitled FASTENER SYSTEM COMPRISING A RETENTION MATRIX AND AN ALIGNMENT MATRIX, now U.S. Pat. No. 8,757,465;

U.S. patent application Ser. No. 12/894,361, entitled FASTENER SYSTEM COMPRISING A RETENTION MATRIX, now U.S. Pat. No. 8,529,600;

U.S. patent application Ser. No. 12/894,367, entitled FASTENING INSTRUMENT FOR DEPLOYING A FASTENER SYSTEM COMPRISING A RETENTION MATRIX, now U.S. Pat. No. 9,033,203;

U.S. patent application Ser. No. 12/894,388, entitled FASTENER SYSTEM COMPRISING A RETENTION MATRIX AND A COVER, now U.S. Pat. No. 8,474,677;

U.S. patent application Ser. No. 12/894,376, entitled FASTENER SYSTEM COMPRISING A PLURALITY OF FASTENER CARTRIDGES, now U.S. Pat. No. 9,044,228;

U.S. patent application Ser. No. 12/894,369, entitled IMPLANTABLE FASTENER CARTRIDGE COMPRISING A SUPPORT RETAINER, now U.S. Patent Application Publication No. 2012/0080344;

U.S. patent application Ser. No. 13/097,907, entitled COMPRESSIBLE STAPLE CARTRIDGE ASSEMBLY, now U.S. Pat. No. 9,301,755;

U.S. patent application Ser. No. 13/097,861, entitled STAPLE CARTRIDGE COMPRISING A LAYER, now U.S. Pat. No. 9,113,865

U.S. patent application Ser. No. 13/097,948, entitled STAPLE CARTRIDGE COMPRISING AN ADJUSTABLE DISTAL PORTION, now U.S. Pat. No. 8,978,954;

U.S. patent application Ser. No. 13/097,936, entitled TISSUE THICKNESS COMPENSATOR FOR A SURGICAL STAPLER, now U.S. Pat. No. 8,657,176;

U.S. patent application Ser. No. 13/097,865, entitled SURGICAL STAPLER ANVIL COMPRISING A PLURALITY OF FORMING POCKETS, now U.S. Pat. No. 9,295,464;

U.S. patent application Ser. No. 13/097,869, entitled STAPLE CARTRIDGE LOADING ASSEMBLY, now U.S. Pat. No. 8,857,694;

U.S. patent application Ser. No. 13/097,954, entitled STAPLE CARTRIDGE COMPRISING A VARIABLE THICKNESS COMPRESSIBLE PORTION, now U.S. Pat. No. 10,136,890;

U.S. patent application Ser. No. 13/097,928, entitled TISSUE THICKNESS COMPENSATOR COMPRISING DETACHABLE PORTIONS, now U.S. Pat. No. 8,746,535;

U.S. patent application Ser. No. 13/097,891, entitled TISSUE THICKNESS COMPENSATOR FOR A SURGICAL STAPLER COMPRISING AN ADJUSTABLE ANVIL, now U.S. Pat. No. 8,864,009;

U.S. patent application Ser. No. 13/097,917, entitled COMPRESSIBLE STAPLE CARTRIDGE COMPRISING ALIGNMENT MEMBERS, now U.S. Pat. No. 8,777,004;

U.S. patent application Ser. No. 13/097,873, entitled STAPLE CARTRIDGE COMPRISING A RELEASABLE PORTION, now U.S. Pat. No. 8,740,038;

U.S. patent application Ser. No. 13/097,938, entitled STAPLE CARTRIDGE COMPRISING COMPRESSIBLE DISTORTION RESISTANT COMPONENTS, now U.S. Pat. No. 9,016,542;

U.S. patent application Ser. No. 13/097,924, entitled STAPLE CARTRIDGE COMPRISING A TISSUE THICKNESS COMPENSATOR, now U.S. Pat. No. 9,168,038; and

U.S. patent application Ser. No. 13/097,856, entitled STAPLE CARTRIDGE COMPRISING STAPLES POSITIONED WITHIN A COMPRESSIBLE PORTION THEREOF, now U.S. Patent Application Publication No. 2012/0080336.

The Applicant of the present application also owns the U.S. Patent Applications identified below which were filed on Sep. 23, 2011, and which are each herein incorporated by reference in their respective entirety:

U.S. patent application Ser. No. 13/242,066, entitled CURVED END EFFECTOR FOR A STAPLING INSTRUMENT, now U.S. Patent Application Publication No. 2012/0080498;

U.S. patent application Ser. No. 13/241,922, entitled SURGICAL STAPLER WITH STATIONARY STAPLE DRIVERS, now U.S. Pat. No. 9,216,019;

U.S. patent application Ser. No. 13/241,912, entitled STAPLE CARTRIDGE INCLUDING COLLAPSIBLE DECK ARRANGEMENT, now U.S. Pat. No. 9,050,084;

U.S. patent application Ser. No. 13/242,086, entitled STAPLE CARTRIDGE INCLUDING COLLAPSIBLE DECK, now U.S. Pat. No. 9,055,941;

U.S. patent application Ser. No. 13/241,629, entitled SURGICAL INSTRUMENT WITH SELECTIVELY ARTICULATABLE END EFFECTOR, now U.S. Patent Application Publication No. 2012/0074200; and

U.S. patent application Ser. No. 13/241,637, entitled SURGICAL INSTRUMENT WITH TRIGGER ASSEMBLY FOR GENERATING MULTIPLE ACTUATION MOTIONS, now U.S. Pat. No. 8,789,741.

Certain exemplary embodiments will now be described to provide an overall understanding of the principles of the structure, function, manufacture, and use of the devices and methods disclosed herein. One or more examples of these embodiments are illustrated in the accompanying drawings. Those of ordinary skill in the art will understand that the devices and methods specifically described herein and illustrated in the accompanying drawings are non-limiting exemplary embodiments and that the scope of the various embodiments of the present invention is defined solely by the claims. The features illustrated or described in connection with one exemplary embodiment may be combined with the features of other embodiments. Such modifications and variations are intended to be included within the scope of the present invention.

Reference throughout the specification to "various embodiments," "some embodiments," "one embodiment," or "an embodiment", or the like, means that a particular feature, structure, or characteristic described in connection with the embodiment is included in at least one embodiment. Thus, appearances of the phrases "in various embodiments," "in some embodiments," "in one embodiment", or "in an embodiment", or the like, in places throughout the specification are not necessarily all referring to the same embodiment. Furthermore, the particular features, structures, or characteristics may be combined in any suitable manner in one or more embodiments. Thus, the particular features, structures, or characteristics illustrated or described in connection with one embodiment may be combined, in whole or in part, with the features structures, or characteristics of one or more other embodiments without limitation. Such modifications and variations are intended to be included within the scope of the present invention.

The terms "proximal" and "distal" are used herein with reference to a clinician manipulating the handle portion of the surgical instrument. The term "proximal" referring to the portion closest to the clinician and the term "distal" referring to the portion located away from the clinician. It will be further appreciated that, for convenience and clarity, spatial terms such as "vertical", "horizontal", "up", and "down" may be used herein with respect to the drawings. However, surgical instruments are used in many orientations and positions, and these terms are not intended to be limiting and/or absolute.

Various exemplary devices and methods are provided for performing laparoscopic and minimally invasive surgical procedures. However, the person of ordinary skill in the art will readily appreciate that the various methods and devices disclosed herein can be used in numerous surgical procedures and applications including, for example, in connection with open surgical procedures. As the present Detailed Description proceeds, those of ordinary skill in the art will further appreciate that the various instruments disclosed herein can be inserted into a body in any way, such as through a natural orifice, through an incision or puncture hole formed in tissue, etc. The working portions or end effector portions of the instruments can be inserted directly into a patient's body or can be inserted through an access device that has a working channel through which the end effector and elongated shaft of a surgical instrument can be advanced.

Turning to the Drawings wherein like numerals denote like components throughout the several views, FIG. **1** depicts a surgical instrument **10** that is capable of practicing several unique benefits of the present invention. The surgical stapling instrument **10** is designed to manipulate and/or actuate various forms and sizes of end effectors **12** that are operably attached thereto. In the embodiment depicted in FIGS. **1** and **2**, for example, the end effector **12** includes an elongated channel **14** that forms a lower jaw **13** of the end effector **12**. The elongated channel **14** is configured to support an "implantable" staple cartridge **30** and also movably support an anvil **20** that functions as an upper jaw **15** of the end effector **12**.

In various embodiments, the elongated channel **14** may be fabricated from, for example, 300 & 400 Series, 17-4 & 17-7 stainless steel, titanium, etc. and be formed with spaced side walls **16**. The anvil **20** may be fabricated from, for example, 300 & 400 Series, 17-4 & 17-7 stainless steel, titanium, etc. and have a staple forming undersurface, generally labeled as **22** that has a plurality of staple forming pockets **23** formed therein. See FIGS. **1**B-**1**E. In addition, the anvil **20** has a bifurcated ramp assembly **24** that protrudes proximally therefrom. An anvil pin **26** protrudes from each lateral side of the ramp assembly **24** to be received within a correspond-

ing slot or opening **18** in the side walls **16** of the elongated channel **14** to facilitate its movable or pivotable attachment thereto.

Various forms of implantable staple cartridges may be employed with the various embodiments of the surgical instruments disclosed herein. Specific staple cartridge configurations and constructions will be discussed in further detail below. However, in the embodiment depicted in FIGS. **1**A and **9-14**, an implantable staple cartridge **30** is shown. In at least one embodiment, the staple cartridge **30** has a body portion **31** that consists of a compressible hemostat material such as, for example, oxidized regenerated cellulose ("ORC") or a bio-absorbable foam in which lines of unformed metal staples **32** are supported. In at least some embodiments, in order to prevent the staple from being affected and the hemostat material from being activated during the introduction and positioning process, the entire cartridge may be coated or wrapped in a biodegradable film **38** such as a polydioxanon film sold under the trademark PDS® or with a Polyglycerol sebacate (PGS) film or other biodegradable films formed from PGA (Polyglycolic acid, marketed under the trade mark Vicryl), PCL (Polycaprolactone), PLA or PLLA (Polylactic acid), PHA (polyhydroxyalkanoate), PGCL (poliglecaprone 25, sold under the trademark Monocryl) or a composite of PGA, PCL, PLA, PDS that would be impermeable until ruptured. The body **31** of staple cartridge **30** is sized to be removably supported within the elongated channel **14** as shown such that each staple **32** therein is aligned with corresponding staple forming pockets **23** in the anvil when the anvil **20** is driven into forming contact with the staple cartridge **30**.

In use, once the end effector **12** has been positioned adjacent the target tissue, the end effector **12** is manipulated to capture or clamp the target tissue between an upper face **36** of the staple cartridge **30** and the staple forming surface **22** of the anvil **20**. The staples **32** are formed by moving the anvil **20** in a path that is substantially parallel to the elongated channel **14** to bring the staple forming surface **22** and, more particularly, the staple forming pockets **23** therein into substantially simultaneous contact with the upper face **36** of the staple cartridge **30**. As the anvil **20** continues to move into the staple cartridge **30**, the legs **34** of the staples **32** contact a corresponding staple forming pocket **23** in anvil **20** which serves to bend the staple legs **34** over to form the staples **32** into a "B shape". Further movement of the anvil **20** toward the elongated channel **14** will further compress and form the staples **32** to a desired final formed height "FH".

The above-described staple forming process is generally depicted in FIGS. **1**B-**1**E. For example, FIG. **1**B illustrates the end effector **12** with target tissue "T" between the anvil **20** and the upper face **36** of the implantable staple cartridge **30**. FIG. **1**C illustrates the initial clamping position of the anvil **20** wherein the anvil has 20 been closed onto the target tissue "T" to clamp the target tissue "T" between the anvil **20** and the upper face **36** of the staple cartridge **30**. FIG. **1**D illustrates the initial staple formation wherein the anvil **20** has started to compress the staple cartridge **30** such that the legs **34** of the staples **32** are starting to be formed by the staple forming pockets **23** in the anvil **20**. FIG. **1**E illustrates the staple **32** in its final formed condition through the target tissue "T" with the anvil **20** removed for clarity purposes. Once the staples **32** have been formed and fastened to the target tissue "T", the surgeon will move the anvil **20** to the open position to enable the cartridge body **31** and the staples **32** to remain affixed to the target tissue while the end effector **12** is being withdrawn from the patient. The end effector **12** forms all of the staples simultaneously as the two jaws **13**, **15** are clamped together. The remaining "crushed" body materials **31** act as both a hemostat (the ORC) and a staple line reinforcement (PGA, PDS or any of the other film compositions mentioned above **38**). Also, since the staples **32** never have to leave the cartridge body **31** during forming, the likelihood of the staples **32** being malformed during forming is minimized. As used herein the term "implantable" means that, in addition to the staples, the cartridge body materials that support the staples will also remain in the patient and eventually be absorbed by the patient's body. Such implantable staple cartridges are distinguishable from prior cartridge arrangements that remain with the end effector and are removed therewith. Those "removable" staple cartridges typically include staple driver components and therefore may be much larger than the end effectors of the present invention that are designed to be employed in connection with certain unique and novel implantable staple cartridge embodiments of the present invention.

In various implementations, the end effector **12** is configured to be coupled to an elongated shaft assembly **40** that protrudes from a handle assembly **100**. The end effector **12** (when closed) and the elongated shaft assembly **40** may have similar cross-sectional shapes and be sized to operably pass through a trocar tube or working channel in another form of access instrument. As used herein, the term "operably pass" means that the end effector and at least a portion of the elongated shaft assembly may be inserted through or passed through the channel or tube opening and can be manipulated therein as needed to complete the surgical stapling procedure. In some embodiments, when in a closed position, the jaws **13** and **15** of the end effector **12** may provide the end effector with a roughly circular cross-sectional shape that facilitates its passage through a circular passage/opening. However, the end effectors of various embodiments of the present invention, as well as the elongated shaft assembly embodiments, could conceivably be provided with other cross-sectional shapes that could otherwise pass through access passages and openings that have non-circular cross-sectional shapes. Thus, an overall size of a cross-section of a closed end effector will be related to the size of the passage or opening through which it is intended to pass. Thus, one end effector for example, may be referred to as a "5 mm" end effector which means it can operably pass through an opening that is at least approximately 5 mm in diameter.

In various embodiments of the present invention, the elongated shaft assembly **40** may have an outer diameter that is substantially the same as the outer diameter of the end effector **12** when in a closed position. For example, a 5 mm end effector may be coupled to an elongated shaft assembly **40** that has 5 mm cross-sectional diameter. However, as the present Detailed Description proceeds, it will become apparent that various embodiments of the present may be effectively used in connection with different sizes of end effectors. For example, a 10 mm end effector may be attached to an elongated shaft that has a 5 mm cross-sectional diameter. Conversely, for those applications wherein a 10 mm or larger access opening or passage is provided, the elongated shaft assembly **40** may have a 10 mm (or larger) cross-sectional diameter, but may also be able to actuate a 5 mm or 10 mm end effector. Accordingly, the outer shaft **40** may have an outer diameter that is the same as or is different from the outer diameter of a closed end effector **12** attached thereto.

As depicted, the elongated shaft assembly **40** extends distally from the handle assembly **100** in a generally straight

line to define a longitudinal axis A-A. In various embodiments, for example, the elongated shaft assembly **40** may be approximately 9-16 inches (229-406 mm) long. However, the elongated shaft assembly **40** may be provided in other lengths and, in other embodiments, may have joints therein or be otherwise configured to facilitate articulation of the end effector **12** relative to other portions of the shaft or handle assembly as will be discussed in further detail below. In various embodiments, the elongated shaft assembly **40** includes a spine member **50** that extends from the handle assembly **100** to the end effector **12**. The proximal end of the elongated channel **14** of the end effector **12** has a pair of retention trunions **17** protruding therefrom that are sized to be received within corresponding trunion openings or cradles **52** that are provided in a distal end of the spine member **50** to enable the end effector **12** to be removably coupled the elongated shaft assembly **40**. The spine member **50** may be fabricated from, for example, 6061 or 7075 aluminum, stainless steel, titanium, etc.

In various embodiments, the handle assembly **100** comprises a pistol grip-type housing that may be fabricated in two or more pieces for assembly purposes. For example, the handle assembly **100** as shown comprises a right hand case member **102** and a left hand case member **104** (FIGS. **5**, **7**, and **8**) that are molded or otherwise fabricated from a polymer or plastic material and are designed to mate together. Such case members **102** and **104** may be attached together by snap features, pegs and sockets molded or otherwise formed therein and/or by adhesive, screws, etc. The spine member **50** has a proximal end **54** that has a flange **56** formed thereon. The flange **56** is configured to be rotatably supported within a groove **106** formed by mating ribs **108** that protrude inwardly from each of the case members **102**, **104**. Such arrangement facilitates the attachment of the spine member **50** to the handle assembly **100** while enabling the spine member **50** to be rotated relative to the handle assembly **100** about the longitudinal axis A-A in a 360° path.

As can be further seen in FIGS. **1** and **4**, the spine member **50** passes through and is supported by a mounting bushing **60** that is rotatably affixed to the handle assembly **100**. The mounting bushing **60** has a proximal flange **62** and a distal flange **64** that define a rotational groove **65** that is configured to rotatably receive a nose portion **101** of the handle assembly **100** therebetween. Such arrangement enables the mounting bushing **60** to rotate about longitudinal axis A-A relative to the handle assembly **100**. The spine member **50** is non-rotatably pinned to the mounting bushing **60** by a spine pin **66**. In addition, a rotation knob **70** is attached to the mounting bushing **60**. In one embodiment, for example, the rotation knob **70** has a hollow mounting flange portion **72** that is sized to receive a portion of the mounting bushing **60** therein. In various embodiments, the rotation knob **70** may be fabricated from, for example, glass or carbon filled Nylon, polycarbonate, Ultem®, etc. and is affixed to the mounting bushing **60** by the spine pin **66** as well. In addition, an inwardly protruding retention flange **74** is formed on the mounting flange portion **72** and is configured to extend into a radial groove **68** formed in the mounting bushing **60**. Thus, the surgeon may rotate the spine member **50** (and the end effector **12** attached thereto) about longitudinal axis A-A in a 360° path by grasping the rotation knob **70** and rotating it relative to the handle assembly **100**.

In various embodiments, the anvil **20** is retained in an open position by an anvil spring **21** or other biasing arrangement as depicted in FIGS. **1**, **9**A, **10**A, and **11**A. The anvil **20** is selectively movable from the open position to various closed or clamping and firing positions by a firing system, generally designated as **109**. The firing system **109** includes a "firing member" **110** which, in various embodiments, comprises a hollow firing tube **110**. The hollow firing tube **110** is axially movable on the spine member **50** and thus forms the outer portion of the elongated shaft assembly **40**. The firing tube **110** may be fabricated from a polymer or other suitable material and have a proximal end **112** that is attached to a firing yoke **114** of the firing system **109**. See FIG. **4**. In various embodiments for example, the firing yoke **114** may be over-molded to the proximal end **112** of the firing tube **110**. However, other fastener arrangements may be employed.

As can be seen in FIGS. **1** and **4**, the firing yoke **114** may be rotatably supported within a support collar **120** that is configured to move axially within the handle assembly **100**. In various embodiments, the support collar **120** has a pair of laterally extending fins **122** that are sized to be slidably received within fin slots **103** and **105** formed in the right and left hand case members **102**, **104**, respectively. See FIG. **7**. Thus, the support collar **120** may slide axially within the handle housing **100** while enabling the firing yoke **114** and firing tube **110** to rotate relative thereto about the longitudinal axis A-A. As can be seen in FIG. **4**, a longitudinal slot **111** is provided through the firing tube **110** to enable the spine pin **66** to extend therethrough into the spine member **50** while facilitating the axial travel of the firing tube **110** on the spine member **50**.

The firing system **109** further comprises a firing trigger **130** which serves to control the axial travel of the firing tube **110** on the spine member **50**. See FIG. **1**. Such axial movement in the distal direction of the firing tube **110** into firing interaction with the anvil **20** is referred to herein as "firing motion". As can be seen in FIG. **1**, the firing trigger **130** is movably or pivotally coupled to the handle assembly **100** by a pivot pin **132**. A torsion spring **135** is employed to bias the firing trigger **130** away from the pistol grip portion **107** of the handle assembly **100** to an un-actuated "open" or starting position. As can be seen in FIGS. **1** and **4**, the firing trigger **130** has an upper portion **134** that is movably attached to (pinned) firing links **136** that are movably attached to (pinned) the support collar **120**. Thus, movement of the firing trigger **130** from the starting position (FIGS. **1** and **9**) toward an ending position adjacent the pistol grip portion **107** of the handle assembly **100** (FIG. **14**) will cause the firing yoke **114** and the firing tube **110** to move in the distal direction "DD". Movement of the firing trigger **130** away from the pistol grip portion **107** of the handle assembly **100** (under the bias of the torsion spring **135**) will cause the firing yoke **114** and firing tube **110** to move in the proximal direction "PD" on the spine member **50**.

Various embodiments of the present invention may be employed with different sizes and configurations of implantable staple cartridges. For example, the surgical instrument **10**, when used in connection with a first firing adapter **140**, may be used with a 5 mm end effector **12** that is approximately 20 mm long (or in other lengths) which supports an implantable staple cartridge **30**. Such end effector size may be particularly well-suited, for example, to complete relatively fine dissection and vascular transactions. However, as will be discussed in further detail below, the surgical instrument **10** may also be employed, for example, in connection with other sizes of end effectors and staple cartridges by replacing the first firing adapter **140** with a second firing adapter **150**. In still other embodiments, the elongated shaft assembly **40** may configured to be attached to only one form or size of end effector. In such embodiments, for example,

the pressure surfaces **146** or **158** (normally provided on the firing adapters **140**, **150**, respectively) would be integrally formed in the distal end of the firing tube **110** —depending upon the particular size of end effector with which it is to be used.

As can be seen in FIG. **2**, the first firing adapter **140** is substantially hollow and has a first spring portion **142** that is configured to extend into an open distal end **116** of the firing tube **110**. A first retainer button **144** is formed on the first spring portion **142** and is sized to be received within a retaining hole **117** provided in the distal end portion of the firing tube **110**. See FIGS. **1** and **2**. Thus, to detach the first firing adapter **140** from the firing tube **110**, the user simply depresses the retainer button **144** out of the retaining hole **117** and withdraws the first firing adapter **140** out of the firing tube **110**. As can also be seen in FIG. **2**, the first firing adapter **140** has an interior pressure surface **146** that is configured to interface with the bifurcated ramp assembly **24** of the anvil **20**.

In various implementations, the bifurcated ramp assembly **24** on the anvil **20** comprises a pair of tines **45** that are separated by a blade-receiving groove (not shown). Each tine **45** has a proximal surface **27** that is substantially parallel to the bottom of the elongated channel **14** when the anvil **20** is in a closed position. The proximal surface **27** then transitions into a clamping ramp **28** that is distal to the proximal surface **27**. See FIG. **3**. The clamping ramp **28** is oriented at a clamping angle "A" with respect to the proximal surface **27**. In various embodiments, for example, clamping angle "A" may be approximately 15 to 30 degrees. As will be discussed in further detail below, when the first pressure surface **146** of the first firing adapter **140** contacts the clamping ramp **28**, the anvil **20** will be moved toward the elongated channel **14** and more specifically toward the staple cartridge **30** therein. As the first firing adapter **140** is further moved distally, the first pressure surface **146** contacts a staple forming ramp **29** on each of the anvil tines **45** to further drive the anvil **20** into the staple cartridge **30** to form the staples **32** therein. As is also shown in FIG. **3**, the staple forming ramp **29** is oriented at a forming angle "B" relative to the clamping ramp **27**. In various embodiments, for example, forming angle "B" may be approximately 5 to 20 degrees. The ramp assembly **24** of the anvil **20** may further have a sloped under surface **25** thereon (e.g., angle "C" is approximately 5 to 40 degrees) such that when the anvil **20** is in an open position, the sloped undersurface **25** surface enables the anvil **20** to pivot to a 15 open limit (angle "p" in FIG. **11**A).

One method of removably coupling the end effector **12** to the spine member **50** will now be explained. The coupling process is commenced by inserting the retention trunions **17** on the elongated channel **14** into the trunion cradles **52** in the spine member **50**. Thereafter, the surgeon advances the firing trigger **130** toward the pistol grip **107** of the housing assembly **100** to distally advance the firing tube **110** and the first firing adapter **140** over a proximal end portion **47** of the elongated channel **14** to thereby retain the trunions **17** in their respective cradles **52**. See FIGS. **10** and **10**A. Such position of the first firing adapter **140** over the trunions **17** is referred to herein as the "coupled position". Various embodiments of the present invention may also have an end effector locking assembly **160** for locking the firing trigger **130** in position after an end effector **12** has been attached to the spine member **50**.

More specifically and with reference to FIGS. **5**, **7**, and **8**, one embodiment of the end effector locking assembly **160** includes a retention pin **162** that is movably supported in the upper portion **134** of the firing trigger **130**. The retention pin **162** is spring-biased toward the left hand case member **104** by a retention spring **166**. When the firing trigger **130** is in an un-actuated (starting) position, the retention pin **162** is biased into abutting contact with a start detent **163** that protrudes inwardly from the left hand case member **104**. See FIGS. **7** and **8**. As discussed above, the firing tube **110** must initially be advanced distally to the coupled position wherein the first firing adapter **140** retains the retention trunions **17** of the end effector **12** in the trunion cradles **52** in the spine member **50**. The surgeon advances the firing adapter **140** distally to the coupled position by pulling the firing trigger **130** from the starting position toward the pistol grip **107**. As the firing trigger **130** is initially actuated, the retention pin **162** slides in abutting contact with the start detent **163** until the firing tube **110** has advanced the first firing adapter **140** to the coupled position at which point the retention pin **162** is biased into a locking cavity **164** formed in the left hand case member **104**. See FIG. **8**. In various embodiments, when the retention pin **162** enters into the locking cavity **164**, the pin **162** may make an audible "click" or other sound, as well as provide a tactile indication to the surgeon that the end effector **12** has been "locked" onto the spine member **50**. In addition, the surgeon cannot inadvertently continue to actuate the firing trigger **130** to start to form staples **32** in the end effector **12** without intentionally biasing the retention pin **162** out of the locking cavity **164**. Similarly, if the surgeon releases the firing trigger **130** when in the coupled position, it is retained in that position by the retention pin **162** to prevent the firing trigger **130** from returning to the starting position and thereby releasing the end effector **12** from the spine member **50**.

In various implementations, a firing trigger release button **167** is mounted within the left hand case member **104** of the handle assembly **100** to enable the surgeon to intentionally release the retention pin **162** to enable the firing trigger **130** to be further actuated or returned to the starting position. See FIGS. **5**, **7**, and **8**. The firing trigger release button **167** is movably mounted within the locking cavity **164** and is spring-biased to an un-activated position (FIG. **8**). When the firing trigger release button **167** is pressed inwardly, it contacts the retention pin **162** and moves it out of the locking cavity **163** to enable the firing trigger **130** to be further activated.

As thus far described, the surgical instrument **10** may be used as a grasping device to manipulate/position tissue. Further movement of the firing trigger **130** toward the pistol grip portion **107** after the trigger **130** has been unlocked (by depressing the retention release button **167**) will cause the firing adapter **140** to contact the clamping ramp **28** on the anvil **20**. As the pressure surface portion **146** of the first firing adapter rides up the clamping ramp **28**, the anvil will move towards the staple cartridge **30** in the elongated channel **14**. Thus, the surgeon may manipulate the anvil **20** toward and away from the staple cartridge **30** to grasp and release tissue therebetween without forming the staples.

Various embodiments of the present invention may further include a firing system lock button **137** that is pivotally attached to the handle assembly **100**. See FIGS. **1** and **4**. In one form, the firing system lock button **137** has a latch **138** formed on a distal end thereof that is oriented to engage the firing yoke **114** when the firing release button is in a first latching position. As can be seen in FIGS. **1** and **4**, a latch spring **139** serves to bias the firing system lock button **137** to the first latching position (FIGS. **11** and **12**). As will be explained in further detail below, the latch **138** serves to engage the firing yoke **114** at a point where the position of

the firing yoke **114** on the spine member **50** corresponds to a point wherein the pressure surface **146** of the first firing adapter **140** is about to distally advance up the clamping ramp **28** on the anvil **20**. It will be understood that, as the first firing adapter **140** advances axially up the clamping ramp **28**, the anvil **20** will move in a path such that its staple forming surface portion **22** is substantially parallel to the upper face **36** of the staple cartridge **30**.

After the end effector **12** has been coupled to the spine member **50**, the staple forming process is commenced by first depressing the firing system lock button **137** to enable the firing yoke **114** to be further moved distally on the spine member **50** and ultimately compress the anvil **20** into the staple cartridge **30**. See FIG. **13**. After depressing the firing system lock button **137**, the surgeon continues to actuate the firing trigger **130** towards the pistol grip **107** thereby driving the pressure surface **146** of the first staple collar **140** up the corresponding staple forming ramp **29** to force the anvil **20** into forming contact with the staples **32** in the staple cartridge **30**. The firing system lock button **137** prevents the inadvertent forming of the staples **32** until the surgeon is ready to start that process. In this embodiment, the surgeon must depress the firing system lock button **137** before the firing trigger **130** may be further actuated to begin the staple forming process.

The surgical instrument **10** may be solely used as a tissue stapling device if so desired.

However, various embodiments of the present invention may also include a tissue cutting system, generally designated as **170**. In at least one form, the tissue cutting system **170** comprises a knife member **172** that may be selectively advanced from an un-actuated position adjacent the proximal end of the end effector **12** (FIGS. **1** and **9-13**) to an actuated position (FIG. **14**) by actuating a knife advancement trigger **200**. The knife member **172** is movably supported within the spine member **50** and is attached or otherwise protrudes from a knife rod **180**. The knife member **172** may be fabricated from, for example, 420 or 440 stainless steel with a hardness of greater than 38HRC (Rockwell Hardness C-scale) and have a tissue cutting edge **176** formed on the distal end **174** thereof and be configured to slidably extend through a slot **31** in the anvil **20** and a centrally disposed slot **33** in the staple cartridge **30** to cut through tissue that is clamped in the end effector **12**. See FIG. **14**A. As can be seen in FIG. **4**, the knife rod **180** extends through the spine member **50** and has a proximal end portion **182**. The proximal end portion **182** drivingly interfaces with a knife transmission **190** that is operably attached to the knife advance trigger **200**. In various embodiments, the knife advance trigger **200** is attached to pivot pin **132** such that it may be pivoted or otherwise actuated without actuating the firing trigger **130**. In various embodiments, a first knife gear **192** is also attached to the pivot pin **132** such that actuation of the knife advance trigger **200** also pivots the first knife gear **192**. A firing return spring **202** is attached between the first knife gear **192** and the handle housing **100** to bias the knife advancement trigger **200** to a starting or un-actuated position. See FIGS. **1** and **4**.

Turning to FIGS. **5** and **6**, various embodiments of the knife transmission **190** also include a second knife gear **194** that is rotatably supported on a second gear spindle **193** and in meshing engagement with the first knife gear **192**. The second knife gear **194** is in meshing engagement with a third knife gear **196** that is supported on a third gear spindle **195**. Also supported on the third gear spindle **195** is a fourth knife gear **198**. The fourth knife gear **198** is adapted to drivingly engage a series of annular gear teeth or rings **184** on a proximal end of the knife rod **180**. Thus, such arrangement enables the fourth knife gear **198** to axially drive the knife rod **180** in the distal direction "DD" or proximal direction "PD" while enabling the firing rod **180** to rotate about longitudinal axis A-A with respect to the fourth knife gear **198**. Accordingly, the surgeon may axially advance the firing rod **180** and ultimately the knife member **172** distally by pulling the knife advancement trigger **200** towards the pistol grip **107** of the handle assembly **100**.

Various embodiments of the present invention further include a knife lockout system **210** that prevents the advancement of the knife member **72** unless the firing trigger **130** has been pulled to the fully fired position (FIGS. **13** and **14**). Such feature will therefore prevent the activation of the knife advancement system **170** unless the staples have first been fired or formed into the tissue. As can be seen in FIG. **1**, various implementations of the knife lockout system **210** comprise a knife lockout bar **211** that is pivotally supported within the pistol grip portion **107** of the handle assembly **100**. The knife lockout bar **211** has an activation end **212** that is adapted to be engaged by the firing trigger **130** when the firing trigger **130** is in the fully fired position. In addition, the knife lockout bar **211** has a retaining hook **214** on its other end that is adapted to hookingly engage a latch rod **216** on the first cut gear **192**. A knife lock spring **218** is employed to bias the knife lockout bar **211** to a "locked" position wherein the retaining hook **214** is retained in engagement with the latch rod **216** to thereby prevent actuation of the knife advancement trigger **200** unless the firing trigger **130** is in the fully fired position. See FIG. **9**.

Various methods of operating at least one of the surgical instrument embodiments of the present invention will now be explained with reference to FIGS. **9**, **9**A, **10**, **10**A, **11**, **11**A, **12**, **12**A, **13**, **13**A, **14**, and **14**A. As can be appreciated from reference to FIGS. **1**, **9** and **9**A, when the knife bar **172** is in the depicted "starting" or un-actuated position, the tissue cutting edge **176** is proximal to the distal end of the first firing adapter **140** such that the sharp tissue cutting edge **176** is not exposed to the user. In alternative embodiments, wherein the elongated shaft assembly is manufactured for use with a single form or size of end effector (e.g., wherein the firing adapters **140**, **150** are not employed), the cutting edge **176** of the knife bar **172** would be located proximal to the distal end of the firing tube to prevent the tissue cutting edge **176** from being exposed to the user in those embodiments as well.

FIGS. **9** and **9**A illustrate the end effector **12** after it has been attached to the spine member **50** by inserting the retention trunions **17** on the end effector **12** into the trunion cradles **52** in the spine member **50**. As illustrated in FIG. **9**, the firing trigger **130** is in an un-actuated or starting position and the end effector **12** has not yet been locked to the spine member **50** by the first firing adapter **140**. "Po" represents the distance that the firing trigger **130** can travel before the first firing adapter **140** starts to travel up the clamping ramp portion **28** of the anvil **20**. The knife advancement trigger **200** is also in a locked un-actuated position.

FIGS. **10** and **10**A illustrate the position of the firing trigger **130** after it has been advanced to a position wherein the end effector **12** is been locked to the spine member **50** by the first firing adapter **40**. This position is referred to herein as the "coupled" position. When in the coupled position, the retention pin **162** has snapped into the locking cavity **164** (FIG. **8**) to thereby provide the surgeon with an audible and tactile indication that the end effector **12** is now locked to the spine member **50**. The firing trigger **130** cannot be actuated further until the surgeon intentionally depresses the firing

trigger release button **167** (FIGS. **5**, **7**, and **8**) to bias the retention pin **62** out of the locking cavity **164**. The distance that the distal end **141** of the first firing adapter **140** has traveled is represented as distance "I" (FIG. **10**A) and the corresponding distance that the firing yoke **114** has traveled on the spine member **50** is represented as distance "I". FIGS. **11** and **11**A illustrate a position of the firing trigger **130** after the release button (not shown) has been depressed and the surgeon has activated the firing trigger **130** to move the first firing adapter **140** to the beginning of the clamping ramps **28** on the anvil **20**. As can be seen in those Figures, the anvil spring **21** has biased the anvil **20** to an open position. The travel of the distal end of the first firing adapter **140** is represented as distance "I" and the corresponding distance that the firing yoke **114** has traveled on the spine member **50** is represented as distance "I". FIGS. **12** and **12**A illustrate the position of the first firing adapter **140** after it has been advanced to the start of the staple forming ramp **29** of the anvil **20**. This position represents the maximum amount of clamping that can be attained before staple formation begins. This position is referred to herein as a "maximum clamped position". As can be seen in FIG. **12**, the firing yoke **114** has contacted the latch **138** on the firing trigger release button **137** and therefore cannot be further advanced distally until the firing trigger release button **137** has been depressed. As can be seen in FIG. **12**A, the staple forming surface **22** of the anvil **20** is substantially parallel to the upper face **31** of the staple cartridge **30**. The distance between the staple forming portion **22** of the anvil **20** and the top retaining surface of the elongated channel **14** has been represented as "C_{max}". In various embodiments, C_{max} may be, for example, 0.085 to 0.144 inches (approximately 2.15 to 3.65 mm) for staple cartridges **30** with body portions **31** that have a substantially equivalent thickness. In at least one embodiment, for example, the cartridge thickness may be as much as approximately 0.01 to 0.03 inches (approximately 0.25 mm to 0.76 mm) larger than the staple size. The total distance that the first firing adapter **140** has traveled from the starting position to this maximum clamped position is represented as "I_2" and the corresponding distance that the firing yoke **114** has traveled on the spine member **50** is represented as "I_2". FIGS. **13** and **13**A illustrate the position of the firing yoke **114** in a fully fired position wherein the staples **32** in the staple cartridge **30** have been fully formed. When in that position, the distance between the staple forming portion **22** of the anvil **20** and the top retaining surface of the elongated channel **14** is represented as "C_{min}". In various embodiments, "C_{min}" may be, for example, approximately 0.015 to 0.030 inches (approximately 0.38 mm to 0.76 mm) for staple cartridges that support staples that, when unformed, have legs that are approximately 0.075 to 0.134 inches (approximately 1.90 mm to 3.40 mm) long (distance "UF" in FIG. **1**A) and when fully formed have a fully formed height of, for example, approximately 0.025 inches to 0.04 inches (approximately 0.63 mm to 1.01 mm) which comprises distance "FF" in FIG. **1**D. The total distance that the first firing adapter **140** has traveled from the starting position to this fully fired position is represented as "I_3" and the corresponding distance that the firing yoke **114** has traveled on the spine member **50** is represented as "I_3". As can also be seen in FIG. **13**, the firing trigger **130** is in the fully fired position and has contacted the activation end **212** of the knife lockout bar **211** to bias the retaining hook **214** out of engagement with the latch rod **216** on the first cut gear **192**.

Transection, especially of vessels may be one of the highest stress steps of any surgical procedure. In the laparoscopic environment, it is even more stressful because if something fails, the entire procedure may need to be converted to an open procedure almost immediately in order to prevent catastrophic events from occurring. Thus, it may be desirable to employ a surgical stapling instrument that has the ability to optionally cut tissue after the staples have been deployed. Various embodiments of the present invention meet such needs.

After the staples have been "fired" (formed) into the target tissue, the surgeon may depress the firing trigger release button **167** to enable the firing trigger **130** to return to the starting position under the bias of the torsion spring **135** which enables the anvil **20** to be biased to an open position under the bias of spring **21**. When in the open position, the surgeon may withdraw the end effector **12** leaving the implantable staple cartridge **30** and staples **32** behind. In applications wherein the end effector was inserted through a passage, working channel, etc. the surgeon will return the anvil **20** to the closed position by activating the firing trigger **130** to enable the end effector **12** to be withdrawn out through the passage or working channel. If, however, the surgeon desires to cut the target tissue after firing the staples, the surgeon activates the knife advancement trigger **200** in the above-described manner to drive the knife bar **72** through the target tissue to the end of the end effector as shown in FIGS. **14**, **14**A. FIG. **14** illustrates the amount of travel of the knife advancement trigger **200** in various embodiments for different lengths of end effectors/staple cartridges wherein the knife bar **72** has been advanced to the fully fired position within the end effector **12**. Thereafter, the surgeon may release the knife advancement trigger **200** to enable the firing return spring **202** to cause the firing transmission to return the knife bar **72** to the starting (un-actuated) position (FIGS. **13**, **13**A). Once the knife bar **72** has been returned to the starting position, the surgeon may open the end effector jaws **13**, **15** to release the implantable cartridge **30** within the patient and then withdraw the end effector **12** from the patient. Thus, such surgical instruments of the present invention facilitate the use of small implantable staple cartridges that may be inserted through relatively smaller working channels and passages, while providing the surgeon with the option to fire the staples without cutting tissue or if desired to also cut tissue after the staples have been fired.

As indicated above, the surgical instrument **10** can be employed in connection with other end effectors that support other sizes of staple cartridges that contain other sizes and numbers of staples. FIGS. **15-19** illustrate use of an end effector **12'** which operably supports a staple cartridge **30'** that has staples **32'** that are larger than the staples **32** in the staple cartridge **30**. For example, the staples **32** in a staple cartridge **30** may be approximately 0.080-0.085 inches (approximately 2.03 to 2.15 mm staples, whereas the staples **32'** in the staple cartridge **30'** may be approximately 0.075 inches (approximately 1.90 mm). In various embodiments, the staple cartridge **30'** is longer than the staple cartridge **30**. For example, the staple cartridge **30** may be approximately 0.78 inches (approximately 20 mm) long; whereas the staple cartridge **30'** may be approximately 1.57 inches (approximately 40 mm) long. FIG. **15** is an exploded view of an end effector **12'**, a second firing adapter **150** and the distal end **55** of the spine member **50**. As can be seen in FIG. **15**, the elongated channel **14'** has a pair of spaced side walls **16'** that each has a slot or opening **18'** therein that is sized to receive a corresponding anvil pin **26'**. The anvil **20'** and the elongated channel **14'** may together form an end effector **12'** that has an overall diameter that would permit the end effector

12' to pass through an opening that has a diameter of at least approximately 0.20 inches (approximately 5.0 mm). The anvil **20'** also has a staple forming portion **22'** that has a plurality of staple forming pockets formed therein and a bifurcated ramp assembly **24'** that protrudes proximally therefrom. The proximal end **15'** of the elongated channel **14'** has a pair of retention trunions **17'** protruding therefrom that are sized to be received within corresponding trunion cradles **52** that are provided in the spine member **50**.

As can be seen in FIG. **15**, the second firing adapter **150** has a substantially hollow body portion **151** and a proximal collar portion **152** that has an inwardly extending retaining protrusion **154** therein. A slot **156** is provided between the body portion **151** and the proximal collar portion **152** to enable the collar portion **152** to be biased relative to the body portion **151** to facilitate the insertion of the retaining protrusion **154** into the retaining hole **117** in the firing tube **110**. To detach the second firing adapter **150** from the firing tube **110**, the surgeon depresses the proximal collar portion **152** to move the retaining protrusion **154** out of the retaining hole **117** to thereby enable the second firing adapter **150** to be pulled distally off of the firing tube **110**.

In various embodiments, the anvil **20'** has a bifurcated ramp assembly **24'** that comprises a pair of tines **45'** that each has a proximal surface **27'** that transitions into a clamping ramp **28'** that is distal to the proximal surface **27'**. See FIG. **15**. The clamping ramp **28'** is oriented at an angle "A'" with respect to the proximal surface **27'**. In various embodiments, for example, angle "A'" may be approximately 50 to 30 degrees. As will be discussed in further detail below, when a second pressure surface **158** of the second firing adapter **150** contacts the clamping ramps **28'**, the anvil **20'** will be moved toward the elongated channel **14'** and more specifically toward the staple cartridge **30'** therein. See FIG. **17**. As the second firing adapter **150** is further moved distally, the second pressure surface **158** contacts staple forming ramps **29'** on the anvil tines **45** to further drive the anvil **20'** toward the staple cartridge **30'** to form the staples **32'** therein. See FIG. **18**. The staple forming ramp **29'** is oriented at an angle "B'" relative to the clamping ramp **27'**. In various embodiments, for example, angle "B'" may be approximately 5 to 20 degrees. A spring (not shown) may be provided between the ramp assembly **24'** and the bottom of the elongated channel **14'** to bias the anvil **20'** to that open position.

FIG. **16** shows the position of the second firing adapter **150** after the surgeon has distally advanced the second firing adapter **150** to the start of the clamping ramp portions **28'**. Operation of the second firing adapter **150** is controlled by the firing trigger **130** in the manner described above with respect to the first firing adapter **140**. FIG. **17** illustrates the position of the second firing adapter **150** in a fully clamped position. FIG. **18** illustrates the position of the second firing adapter **150** in the fully fired position wherein the staples **32'** in the staple cartridge **30'** have been formed through the clamped tissue (not shown).

As indicated above, the implantable staple cartridge **30'** is longer than the implantable staple cartridge **30**. Thus, as shown in FIG. **15**, the end effector **12'** also includes a distal knife member **124** that is movably supported in the elongated channel **14'**. The distal knife member **124** has a tissue cutting edge **125** and a proximal portion **126** that is configured for engagement by the knife bar **72**. Thus, if the surgeon desires to cut the tissue after the staples have been fired, the surgeon activates the firing trigger **200** as described above to drive the knife bar **172** distally into contact with the distal knife member **124** to drive the distal knife member **124** through the tissue as illustrated in FIG. **19**. The distal knife member **124** may have at least one retainer portion thereon that is adapted to slide through a correspondingly shaped slot (not shown) in the elongated channel **14'**. Such arrangement enables the end effector **12'** to be opened after the staples have been formed and the tissue has been cut. The distal knife member **124** remains in the anvil **20'** and is removed with the end effector **12'** when it is withdrawn from the patient.

Thus, various embodiments of the surgical instrument **10** have separate stapling and tissue cutting mechanisms such that the surgeon may staple the tissue without cutting the tissue. The various embodiments of the stapling instrument of the present invention can be successfully employed with different sizes of end effectors that are adapted to fire different sizes and numbers of staples. The surgical instruments may be provided in the form of a kit that includes an instrument **10** and a first firing adapter **140** and a second firing adapter **150** that enables the instrument to be employed to fire different sizes of implantable staple cartridges.

Various unique and novel embodiments of the present invention employ a compressible staple cartridge that supports staples in a substantially stationary position for forming contact by the anvil. Unlike prior surgical stapling arrangements that employ staple driving elements, the staples in the cartridges of various embodiments of the present invention are not driven into the anvil. In the various embodiments of the present invention, the anvil is driven into the unformed staples. The degree of staple formation attained is dependent upon how far the anvil is driven into the staples. Such arrangement provides the surgeon with the ability to adjust the amount of forming or firing pressure applied to the staples and thereby alter the final formed height of the staples.

In various embodiments, the amount of firing motion that is applied to the movable anvil is dependent upon the degree of actuation of the firing trigger. For example, if the surgeon desires to attain only partially formed staples, then the firing trigger is only partially depressed inward towards the pistol grip **107**. To attain more staple formation, the surgeon simply compresses the firing trigger further which results in the anvil being further driven into forming contact with the staples. As used herein, the term "forming contact" means that the staple forming surface or staple forming pockets have contacted the ends of the staple legs and have started to form or bend the legs over into a formed position. The degree of staple formation refers to how far the staple legs have been folded over and ultimately relates to the forming height of the staple as referenced above. Those of ordinary skill in the art will further understand that, because the anvil **20** moves in a substantially parallel relationship with respect to the staple cartridge as the firing motions are applied thereto, the staples are formed substantially simultaneously with substantially the same formed heights.

FIGS. **20-23** illustrate an alternative surgical instrument **10** that employs a staple height indicator assembly **220**. In various embodiments, the staple height indicator assembly **220** comprises an indicator bar **222** that is attached to the upper portion **134** of the firing trigger **130** for pivotal travel therewith. As the firing trigger **130** is pivoted toward the pistol portion **107** of the handle assembly **100** to compress the anvil **20** into the staple cartridge **30** as described above, the indicator bar **222** is viewable through a window **223** in the left hand case member **104**. In this embodiment, the staple height indicator assembly **220** also includes a series of detents **24**, **26**, **28** that are formed in the left hand case member **104** and which correspond to three stages of staple

formation. In particular, once the firing trigger **130** is initially actuated, the retention pin **162** slides in abutting contact with the start detent **163** until the firing tube **110** has advanced the firing adapter **140** or **150** to the above-described locking position at which point the retention pin **162** is biased into a locking cavity **164** formed in the left hand case member **104**. When the surgeon desires to start to close the jaws **13**, **35** of the end effector **12**, the retention release button **167** is depressed to enable the firing trigger **130** to be further actuated. When the firing trigger release button **167** is pressed inwardly, it contacts the retention pin **162** and moves it out of the locking cavity **163** to enable the firing trigger **130** to be activated. As described above, the surgeon may now use the bottom and top jaws **13**, **15**, respectively of the end effector **12** to grasp and manipulate tissue. When the surgeon desires to commence the staple forming process, the firing trigger release button **167** is depressed which enables the firing yoke **114** to be advanced distally as the surgeon continues to depress the firing trigger **130**.

Further advancement of the firing trigger **130** moves the anvil **20** into forming contact with the staples **32** in the staple cartridge **30**. As the firing trigger **130** is further depressed, the flat end **165** of the retention pin **162** will slide off of starting detent **163** and contact the first detent **224** that corresponds to a first amount of staple formation that is represented by a first staple height symbol **230** on the left hand case member **104**. See FIG. **20**. As shown, the first staple height symbol **230** comprises a picture of a staple that has just started to form. Other symbols/indicia could be used to designate this stage of staple formation. As the retention pin **162** engages the first detent **224** and audible click may be heard by the surgeon. The engagement of the retention pin **162** with the first detent **224** may also provide some tactile feedback to the surgeon through the firing trigger **130**. In addition, the staple height indicator bar **222** may be viewed through the viewing window **223** adjacent to the first height staple symbol **230**. If the surgeon desires to further form the staples **32** in the staple cartridge, the retention pin **162** is pressed out of engagement with the first detent **224** by a release button **240** that is formed into the second hand case member **104**. In various embodiments for example, the release button **240** may be integrally formed into the left hand case member **104** with a hinge portion **242** that is part of the left hand case member **104**. Such arrangement enables the release button **240** to be pressed into the end **165** of the retention pin **162** to move it out of engagement with any of the first, second and third detents **224**, **226**, **228**. Once the retention pin **162** has been pressed out of the first detent **224**, the firing trigger **130** may be further depressed until the retention pin **162** engages the second staple formation detention **226**. Such position of the firing trigger **130** has resulted in further movement of the anvil **20** into staple forming contact with the staples **32** in the staple cartridge **30**. Again, the retention pin **162** snaps into the second staple formation detent **226** providing the surgeon with audible and tactile feedback that the firing trigger **130** is in the second staple formation position. When in that position, the staple height indicator bar **222** may be viewed through the viewing window **223** and is adjacent to the second staple height symbol **232**. If the surgeon desires to further form the staples **32** in the staple cartridge **30**, the retention pin **162** is pressed out of engagement with the second detent **226** by depressing the release button **240**. Thereafter, the firing trigger **130** may be depressed further until the retention pin **162** engages the third staple formation detent **228** corresponding to the final stage of staple formation. Again, the retention pin **162** snaps into the third staple formation detent **228** providing the surgeon with audible and tactile feedback that the firing trigger **130** is in the third staple formation position. When in that position, the staple height indicator bar **222** may be viewed through the viewing window **223** and is adjacent to the staple height symbol **234**. After the staples have been formed a desired amount, the surgeon may bias the retention pin **162** out of the third staple height detent **228** to enable the firing trigger **130** to return to the starting position. Or, if desired, the surgeon may then commence the tissue cutting procedure as described above before returning the firing trigger **130** to the starting position.

FIG. **24** illustrates an alternative embodiment wherein the staple height indicator assembly, generally designated as **220'**, does not include the series of detents that correspond to the various staple formations. This embodiment, however, does include the staple height indicator bar **222** and viewing window **223**. Thus, the surgeon may monitor the amount of staple formation being achieved by monitoring the position of the staple height indicator bar **222** through the viewing window **223**. This embodiment does include the staple height indicator symbols **230**, **232**, **234** as described above. In addition, this embodiment may also include an unformed staple symbol **229** that corresponds to the starting position wherein the staples **32** have not yet started to be formed by the anvil **20**. This embodiment would otherwise operate in the same manners described above.

FIGS. **25** and **26** illustrate an alternative end effector **12"** that is similar to the end effector **12'** described above, except with the following differences that are configured to accommodate a knife bar **172'**. The knife bar **172'** is coupled to or protrudes from a knife rod **180** and is otherwise operated in the above described manner with respect to the knife bar **172**. However, in this embodiment, the knife bar **172'** is long enough to traverse the entire length of the end effector **12"** and therefore, a separate distal knife member is not employed in the end effector **12"**. The knife bar **172'** has an upper transverse member **173'** and a lower transverse member **175'** formed thereon. The upper transverse member **173'** is oriented to slidably transverse a corresponding elongated slot **250** in anvil **20"** and the lower transverse member **175'** is oriented to traverse an elongated slot **252** in the elongated channel **14"** of the end effector **12"**. A disengagement slot (not shown) is also provide din the anvil **20"** such that when the knife bar **172'** has been driven to an ending position with thin end effector **12"**, the upper transverse member **173'** drops through the corresponding slot to enable the anvil **20"** to move to the open position to disengage the stapled and cut tissue. The anvil **20"** may be otherwise identical to anvil **20** described above and the elongated channel **14"** may be otherwise identical to elongated channel **14** described above.

In these embodiments, the anvil **20"** is biased to a fully open position (FIG. **25**) by a spring or other opening arrangement (not shown). The anvil **20"** is moved between the open and fully clamped positions by the axial travel of the firing adapter **150** in the manner described above. Once the firing adapter **150** has been advanced to the fully clamped position (FIG. **26**), the surgeon may then advance the knife bar **172"** distally in the manner described above. If the surgeon desires to use the end effector as a grasping device to manipulate tissue, the firing adapter may be moved proximally to allow the anvil **20"** to move away from the elongated channel **14"** as represented in FIG. **27** in broken lines. In this embodiment, as the knife bar **172"** moves distally, the upper transverse member **173'** and the lower transverse member **175'** draw the anvil **20"** and elongated channel **14"** together to achieve the desired staple formation

as the knife bar **172"** is advanced distally through the end effector **12"**. See FIG. **28**. Thus, in this embodiment, staple formation occurs simultaneously with tissue cutting, but the staples themselves may be sequentially formed as the knife bar **172"** is driven distally.

FIGS. **29** and **30** illustrate use of an end effector **12"** that has an anvil **20"** that is fabricated from, for example, stainless steel, titanium, PGA (Polyglycolic acid) or other absorbable plastic and is somewhat flexible. These Figures also illustrate use of a retention matrix **6250** and an alignment matrix **6206** which will be discussed in further detail below. As can be seen in FIG. **29**, the anvil **20"** flexes into the fully formed position as the knife bar **172"** is driven distally therethrough.

In many surgical applications, it is desirable or advantageous to employ a surgical cutting and stapling instrument that has an end effector that may be articulated relative to the elongated shaft assembly. The ability to access tight areas with prior articulatable instruments, however, was often times limited due to the size and construction of the members used to effect articulation of the end effector. FIGS. **31-40** illustrate another surgical instrument embodiment of the present invention that is capable of articulating the end effector relative to the elongated shaft and which employs a relatively compact articulation control arrangement in the handle assembly.

The surgical instrument **310** of this embodiment is substantially similar to the various surgical instrument embodiments **10** described above, except that this embodiment employs an articulated shaft assembly **312** to facilitate selective positioning of the end effector **12** relative to the elongated longitudinal axis A-A. While the surgical instrument **310** will be described herein for use in connection with an end effector **12** of the type described above, those of ordinary skill in the art will appreciate that the surgical instrument **310** may also be employed in connection with a second firing adapter **150** to actuate an end effector **12'** or other end effector arrangements. As can be seen in FIGS. **31** and **32**, the articulated shaft assembly **312** includes a distal shaft assembly portion **314** that is pivotally coupled to a proximal shaft assembly portion **316** that is operably coupled to the handle assembly **100**. In various embodiments, for example, the distal shaft assembly **314** includes a distal spine member **320** that has a pair of trunion cradles **322** therein for receiving the trunions **17** therein. See FIG. **32**. The distal spine member **320** has a proximal end **324** that includes a pivot base **326** that has a pivot pin **328** protruding therefrom.

As can be seen in FIG. **32**, the proximal shaft assembly portion **316** includes a proximal spine segment **330** that has a proximal pivot base and knife guide **332** attached thereto. The knife guide **332** may, for example, be welded or attached to the proximal spine segment **330** with adhesive or other fastener arrangements. A pivot hole **334** is provided in the proximal pivot base knife guide **332** to rotatably receive the pivot pin **328** therein to enable the distal spine segment **320** to pivot relative to the proximal spine segment **330** about a first pivot axis FA-FA that is substantially transverse to the longitudinal axis A-A. The surgical instrument **310** further includes a distal firing tube segment **370** that is pivotally coupled to a pair of firing tube links **380**, **382** for pivotal travel about a second axis SA-SA. The distal firing tube segment **370** has a retainer hole **372** for receiving the retainer button **144** of the first firing adapter **140** therein. The pair of firing tube links **380**, **382** are pivotally coupled to a proximal firing tube **390** for pivotal travel relative thereto about a third pivot axis TA-TA. See FIG. **32**.

In various embodiments, the proximal firing tube **390** is attached to a rotation knob **400** that is rotatably attached to the handle assembly **100**. See FIGS. **31**, **38** and **39**. The rotation knob **400** may be molded from a polymer or plastic material and include a hub portion **402** and flange portion **404** that is spaced from the hub portion **402**. A nose portion **101** of the handle assembly **100** is received between the hub portion **402** and the flange portion **404** to enable the rotation knob **400** to be rotatable relative to the handle assembly **100** about longitudinal axis A-A. In other embodiments, the rotation knob **400** may be fabricated from other suitable materials. In the depicted embodiment, the proximal firing tube **390** and the proximal spine segment **330** are each non-movably attached to the rotation knob **400**. As can be seen in FIGS. **38** and **39**, the proximal spine segment **330** and the proximal firing tube **390** are pinned to the rotation knob **400** by a pin **406**. Thus, the surgeon may rotate the end effector **12** relative to the handle housing **100** in a 360° path about the longitudinal axis A-A by rotating the rotation knob **400**.

Referring to FIGS. **37**, **38** and **40**, in various embodiments, the end effector **12** may be selectively articulated relative to the longitudinal axis A-A by a pair of articulation members **420**, **430** that are attached to the distal pivot base **326** and an articulation ball **440** that is rotatably supported within a socket **408** in the rotation knob **400**. In various embodiments, the articulation members **420**, **430** may comprise, for example, cables that are fabricated from multiwire cable, Nitinol, titanium, etc. The first or right articulation member **420** has a distal end **422** that has a lug **424** formed thereon that is sized to be press-fit into a first cable attachment hole **327** that is provided in the distal pivot base **326**. Likewise, the second or left articulation member **430** has a distal end **432** that has a lug **434** formed thereon that is sized to be press-fit into a second cable attachment hole **329** that is provided in the distal pivot base **326**. See FIG. **37**. Thus, the end effector **12** may be pivoted to the right about first axis FA-FA (FIGS. **35** and **36**) by pulling on the first or right articulation member **420** and the end effector **12** may be pivoted to the left about first axis FA-FA by pulling the second or left articulation member **430**. In various embodiments, the right articulation member **420** may be slidably received within a right cable channel **336** formed in the proximal spine segment **330** and the left articulation member **430** may be slidably received within a left cable channel **338** in the proximal spine segment **330**.

Turning to FIGS. **38-40**, the first articulation member **420** has a proximal end **426** that has a retaining ball **428** swaged thereon or otherwise attached thereto that is adapted to be received within a first retaining slot **442** in the articulation ball **440** that is rotatably supported within a socket **401** in the rotation knob **400**. Likewise, the second articulation member **430** has a proximal end **436** that has a retaining ball **438** swaged thereon or otherwise attached thereto that is adapted to be received within a second retaining slot **444** in the articulation ball **440**. As can be most particularly seen in FIG. **40**, the articulation ball **440** further has an actuator slot **446** therethrough that facilitates the unimpeded passage of the proximal firing tube segment **390** therein. As shown in FIG. **38**, the actuator slot **446** may taper from wider opening portions **448**, **450** to a passage **452** in the center of the articulation ball **440** that permits sliding passage of the proximal firing tube segment **390**. As will be discussed further below, the articulation ball **440** is rotatably or pivotally supported within the socket **401** and is selectively movable from a neutral position (shown in FIG. **38** in solid lines) to first and second articulation control positions

(shown in FIG. **38** in broken lines). The articulation ball **440** is also axially movable within the socket **401**.

As can be seen in FIG. **40**, the surgical instrument **310** may include a locking arrangement, generally designated as **453** for locking the articulation ball **440** in any one of the neutral, first and second articulation control positions. In various embodiments, the locking arrangement **453** comprises a series of locking detent segments **454** that are provided on the articulation ball **440** and are adapted to mate with locking ribs **410** that are formed within a recessed **408** formed in a hub portion **402** oriented within the socket area **401** of the rotation knob **400**. An actuator passage **412** extends through the hub portion **402** and aligns with the actuator slot **446** in the articulation ball **440** to accommodate the proximal firing tube segment **390** therethrough. As can be seen in FIGS. **38** and **39**, an actuator ball spring **456** is journaled on a spring retention hub **414** portion of the rotation knob **400** to it bias the articulation ball **440** proximally such that the locking detents **454** are brought into retaining engagement with the locking ribs **410** in the hub portion **402**.

To facilitate application of articulation motions to the articulation ball **440**, a pair of laterally extending articulation handles **458**, **460** protrude from the articulation ball **440** in diametrically opposite directions. In various embodiments, the articulation ball **440** may be fabricated from, for example, polycarbonate, Nylon, Ultem®, with no fill, glass fill, carbon fill, mineral fill, etc. and have the locking detents **454** machined or molded thereon. The articulation handles **458**, **460** may be attached to the articulation ball **440** by press fits, welds, etc. Such locking arrangement enables the articulation ball **440** to be locked in any of the neutral or first or second articulation positions. Once the surgeon has moved the articulation ball **440** to achieve the desired articulated position of the end effector, the surgeon may release the articulation ball **440** to enable the actuator ball spring **456** to bias the articulation ball **440** proximally such that the locking detents **454** are brought into retaining engagement with the locking ribs **410** in the hub portion **402**. In various embodiments, the actuator ball spring **456** may be sized such that the articulation ball **440** may spring back to the neutral position when the articulated end effector is forcibly pulled back through a trocar or similar opening. Furthermore, use of the articulation handles **458**, **460** enable the degree of articulation to be "tuned" to the particular surgical application.

As can be seen in FIG. **38**, the first or right articulation handle **458** protrudes through a right slot **416** in the rotation knob **400** and the second or left articulation handle **460** protrudes through a left slot **418** in the rotation knob **400**. To articulate the end effector **12** relative to the longitudinal axis A-A, the surgeon first moves the right and left articulation handles **458**, **460** axially in the distal direction "DD" to disengage the locking detents **454** from the locking ribs **410** in the hub portion **402** of the rotation knob **400**. Thereafter, the surgeon may pivot the articulation ball **440** by moving the articulation handles **458**, **460** in the desired directions to apply articulation motions to the articulation members **420**, **430**. For example, the end effector **12** may be pivoted to the right by moving the right articulation handle **458** in the proximal direction "PD" and the left articulation handle **460** in the distal direction "DD" to apply a pulling motion (articulation motion) to the right articulation member **420** and a pushing motion to the left articulation member **430**. Similarly, the end effector **12** may be pivoted to the left by moving the left articulation handle **460** in the proximal direction "PD" and the right articulation handle **458** in the distal direction "DD" to apply a pulling motion (articulation motion) to the left articulation member **430** and a pushing motion to the right articulation member **420**. The various ranges of motions of the right and left articulation handles **458**, **460** are illustrated in broken lines in FIG. **38**. In this way, the end effector **12** can be optimally positioned in a variety of angular positions, e.g., by angling clockwise or counterclockwise, without requiring rotation or other movement of the elongated shaft assembly **40**. FIG. **35** shows the angle α which in various embodiments can be from 0° to 45°.

Various embodiments of the surgical instrument **310** include a knife bar **472** that is movably supported within the hollow proximal spine segment **330** and through a knife support slot **333** that tapers from a narrow proximal portion **335** to a wide distal portion **337** to enable the knife bar **472** to flex therearound to accommodate the articulation of the end effector **12** about the longitudinal axis A-A. See FIG. **37**. In various embodiments, the knife bar **472** may be fabricated from, for example, 300 or 400 Series stainless steel and have a tissue cutting edge **476** formed on the distal end thereof. As can be further seen in FIG. **37**, the knife bar **472** slidably passes through a knife slot **473** in the distal pivot base **326**. A proximal end **478** of the knife bar **472** is attached to a knife rod **480** that extends through the proximal spine segment **330** to drivingly engage the firing transmission **190** as was described above. See FIG. **31**. The retention pin **406** extends into a longitudinal slot **392** (FIG. **38**) in the proximal firing tube segment **390** and through a hole **339** in the proximal spine segment **330** (FIG. **39**) and into a longitudinal slot **482** in the knife rod **480** to enable the proximal firing tube segment **390** and the knife rod **480** to move axially relative to the proximal spine segment **330** and handle assembly **100**. Thus, the surgeon may selectively operate the knife bar **472** to cut tissue by operating the knife advancement trigger **200** in the manner described above.

Various articulation arrangements are disclosed in U.S. patent application Ser. No. 12/775,809, entitled LAPAROSCOPIC DEVICES WITH ARTICULATING END EFFECTORS, filed May 7, 2010, now U.S. Patent Application Publication No. 2011/0275901, and U.S. patent application Ser. No. 12/775,699, entitled BENDABLE SHAFT FOR HANDLE POSITIONING, filed May 7, 2010, now U.S. Patent Application Publication No. 2011/0276083, the disclosures of each being herein incorporated by reference in their respective entireties. FIGS. **41** and **42** illustrate an alternative articulated shaft assembly **490** that is substantially identical to the articulated shaft assembly **340** and is operated in substantially the same way except for the intermediate firing tube segment **492** which replaces the firing tube link **380** employed in the articulated shaft assembly **340**. As can be seen in FIGS. **41** and **42**, the intermediate firing tube segment **492** extends from the distal firing tube segment **370** to the proximal firing tube segment **390**. In various embodiments, the intermediate firing tube segment **492** may be fabricated from Nylon, Isoplast®, or other flexible plastic. In various embodiments, the intermediate firing tube segment **492** has two longitudinally extending compression spine portions **494** from which a plurality of spaced rib segments **496** that are separated by spaces **498** extend to form a substantially hollow tube segment through which the other components of the spine assembly and knife bar may operably pass. The spine portions **494** are configured to transmit the compression motions from the proximal firing tube segment **390** to the distal firing tube segment **370** which are of sufficient magnitude to actuate the anvil **20** to a fully fired position while enabling the end effector **12** to be

selectively articulated relative to the longitudinal axis A-A. The intermediate firing tube segment **492** has a distal end portion **491** that is attached to the distal firing tube segment by, for example, pins, slotted bosses, snap features, etc. as well as proximal portion **493** that is attached to the proximal firing tube segment **390** by the same or similar means. In this embodiment, the end effector **12** can be optimally positioned in a variety of angular positions, e.g., by angling clockwise or counterclockwise, without requiring rotation or other movement of the elongated shaft assembly **490**. FIG. **42** shows the angle α which in various embodiments can be from 0° to 45°.

FIGS. **43-47** illustrate another surgical instrument embodiment of the present invention. The surgical instrument **510** of this embodiment is substantially similar to the surgical instrument embodiment **310** described above, except for the various differences discussed below. While the surgical instrument **510** will be described herein for use in connection with an end effector **12** of the type described above, those of ordinary skill in the art will appreciate that the surgical instrument may also be employed in connection with a second firing adapter **150** to actuate an end effector **12'** or it may be used in connection with other end effector arrangements. Various embodiments of the surgical instrument **510** include an articulated shaft assembly **512** to facilitate selective positioning of the end effector **12** relative to the longitudinal axis A-A. As can be seen in FIGS. **43** and **44**, the articulated shaft assembly **512** includes a distal spine member **520** that has a pair of trunion cradles **522** therein for receiving the trunions **17** therein. The distal spine member **520** has a proximal end **521** that is pivotally coupled to a distal end **531** of a proximal spine segment **530**. In particular, the proximal end **521** of the distal spine segment **520** has a pair of spaced distal spine tines **523** that support an articulation pin **524** that extends through the distal end **531** of the proximal spine segment **530** to define an articulation axis AA-AA that is substantially transverse to longitudinal axis A-A. See FIG. **46**.

In various embodiments of the present invention, the end effector **12** is articulatable to a variety of different orientations about the longitudinal axis A-A. For example, angle α' in FIG. **47** can range from 180° to 90°. The end effector **12** is articulated by means of at least one articulation member **550** that is coupled to an articulation link **540**. Articulation link **540** is pivotally coupled to the distal end **521** of the distal spine segment **520** by a distal pin **542**. See FIG. **43**. The articulation link **540** is pivotally coupled to the distal end **552** of the articulation rod **550** by an articulation rod pin **554** as shown in FIG. **46**. As can be seen in FIG. **43**, the articulation member **550** extends through the articulated shaft assembly **512** and has a proximal end **556** that extends into a rotation knob **560** that is rotatably coupled to the handle assembly **100**. The proximal end **556** of the articulation member **550** is coupled to an articulation control member or button **558** that is slidably coupled to the rotation knob **560** for selective axial travel relative thereto. Thus, axially sliding the articulation button **558** in the distal direction "DD" will cause the end effector **12** to pivot about the longitudinal axis A-A in the manner illustrated in FIG. **47**. To return the end effector to a starting unarticulated position wherein the end effector is coaxially aligned on the longitudinal axis A-A, the surgeon simply slides the actuator button **558** in the proximal direction "PD" on the rotation knob **560**.

As with some of the embodiments described above, the rotation knob **560** is non-rotatably coupled to a mounting bushing **570** that is rotatably affixed to the handle assembly **100**. See FIGS. **43** and **47**. The mounting bushing **570** has a proximal flange **572** and a distal flange **574** that define a rotational groove **575** therebetween to rotatably receive a nose portion **101** of the handle assembly **100** therebetween. Such arrangement enables the mounting bushing **570** to rotate about longitudinal axis A-A relative to the handle assembly **100**. The proximal spine segment **530** is non-rotatably pinned or otherwise attached (welded, adhesive, etc.) to the mounting bushing **570** such that rotation of the rotation knob **560** about longitudinal axis A-A causes the end effector **12** to rotate about longitudinal axis A-A. It will be understood that such arrangement may facilitate rotation of the end effector **12** in a 360° path about the longitudinal axis A-A.

This embodiment also has a distal firing tube segment **580** that is coupled to the first firing adapter **140** and axially movable on the distal spine segment **520**. In particular, the retainer button **144** on the first firing adapter **140** is received within a retainer hole **581** in the distal firing tube segment **580** in the manner described above. The distal firing tube segment **580** is actuated by at least one firing member that is attached thereto. In a preferred embodiment, the distal firing tube segment **580** is actuated by a pair of firing bands **582**, **584** attached thereto. The firing bands **582**, **584** are attached to a band mount **585** coupled to a proximal firing tube segment **590** that is attached to the firing yoke **114** in the above-described manner. Also journaled on the proximal spine segment **530** and coupled to the rotation knob **560** for rotation therewith is a cover tube **592**. The proximal firing tube **590** and the band mount **585** are axially movable relative to the cover tube **592**. The firing bands **582**, **584** are slidably received within lateral band channels **526** in the distal spine member **520** as shown in FIG. **44**C. In various embodiments, the firing bands **582**, **584** each comprise a thin flexible member that may be fabricated from, for example, stainless steel and are each capable of pushing on the distal firing tube segment **580** to actuate or close the anvil **20** in the above-described manner to form the staples **32** in the implantable staple cartridge **30**. Actuation of the firing cables **582**, **584** is accomplished by pulling the firing trigger **130** in the above-described manners. Returning the firing trigger **130** to the starting position will pull on the firing cables **582**, **584** and cause the first firing adapter **140** to either pull the anvil **20** to an open position or to move to a position wherein a spring (not shown) biases the anvil **20** to the open position.

The surgical instrument **510** may further include a knife **534** that is movably supported within a knife support slot **528** in the distal spine segment **520**. See FIG. **44**B. In various embodiments, the knife bar **534** may be fabricated from, for example, 300 or 400 stainless steel, etc. and have a tissue cutting edge **535** formed on the distal end thereof. The knife bar **534** is attached to a knife band **536** that may be fabricated from 300 or 400 series stainless steel. The knife band may, for example, comprise 0.007 to 0.012 inch thick stainless steel band material that is more hardened than the rod. The knife cable **536** extends through the distal spine member **520** and the proximal spine segment **530** and is attached to a knife rod **480** that drivingly engages the firing transmission **190** as was described above. Thus, the surgeon may selectively operate the knife bar **534** to cut tissue by operating the knife advancement trigger **200** in the manner described above. Various embodiments may also employ a bellows-like cover member **594** to prevent dirt, tissue, debris, etc. from fouling the articulation joint. See FIG. **48**.

FIGS. **49-53** illustrate another surgical instrument embodiment of the present invention. The surgical instru-

ment **610** of this embodiment is substantially similar to the surgical instrument embodiment **10** described above, except for the differences explained below. The surgical instrument **610** is configured to actuate an end effector **612** that has two movable jaws **613**, **615**. In various embodiments, the end effector **612** is coupled to an elongated shaft assembly **655** that protrudes from a handle assembly **100**. See FIG. **49**. The elongated shaft assembly **655** includes an elongated spine assembly **658** and an elongated closure tube assembly **680** that is axially movable on the spine assembly **658** in the proximal and distal directions. As shown, the elongated shaft assembly **655** extends distally from the handle assembly **100** in a generally straight line along a longitudinal axis A-A. In various embodiments, the elongated shaft assembly **655** may be approximately 9 to 16 inches (approximately 228.8 mm to 406.4 mm) long. However, the elongated shaft assembly **655** may be provided in other lengths.

Referring to FIGS. **50** and **51**, in various embodiments, the lower jaw **613** of the end effector **612** comprises an elongated channel **614** and the upper jaw **615** comprises an anvil **620**. The elongated channel **614** has a pair of spaced side walls **616** that each terminate in an upwardly protruding closure end or tip **618**. The elongated channel **614** may be fabricated from, for example 17-4 or 400 series stainless steel and be sized to operably support a staple cartridge **630** or other form of staple cartridge therein. The anvil **620** may be fabricated from **416**, 17-4, 17-7 stainless steel, etc. In at least one embodiment, for example, end effector **612** (when in a closed position) and the elongated shaft assembly **655** each have a maximum outer diameter that would permit the device to be operably passed through an opening that has a diameter of at least approximately 8-12 mm (approximately 0.31-0.47 inches). However, the end effector **612** and elongated shaft assembly **655** may have other diameters and shapes. The end effector **612** further includes a distal spine segment **660** that is adapted to be removably coupled to a distal end of a proximal spine segment **670** as will be further explained below.

The anvil **620** has a staple forming portion **622** that has a plurality of staple forming pockets formed therein. In addition, the anvil **620** has a bifurcated closure portion **624** that includes at least one and preferably a pair of downwardly extending closure tips **625**. As can be seen in FIGS. **50-53**, in at least one embodiment, the closure tips **625** and the corresponding closure ends or tips **618** of the elongated channel **614** are pivotally pinned to spine lugs **663** of a bifurcated distal end **662** of a distal spine segment **660** (FIG. **55**) of a spine assembly **658** by a pivot pin **626** such that, when viewed from the side, the closure tips **625** and closure tips **618** form a movable "scissors-like" closure structure generally designated as **628**. In other embodiments, the anvil **620** may be movably coupled to the elongated channel **614**.

Various embodiments of the end effector **612** also include an axially movable knife assembly **640** that includes a knife plate **642** that has a pair of spaced knife bars **644** protruding distally therefrom that are configured to slide axially between the spine lugs **663** of the distal spine segment **660**. See FIG. **55**. A knife member **646** is attached to, or otherwise formed on, the distal ends of the knife bars **644**. In various embodiments, the knife bars **644** and the knife member **646** may be fabricated from, for example, 300 or 400 Series stainless steel. A tissue cutting edge **648** is formed on a distal end of the knife member **646**. A lower portion **649** of the knife member **646** is configured to engage a staple driving sled **650** that is movably supported within the elongated shaft **614**. The staple driving sled **650** may be retained in a slot or slot arrangements (not shown) in the elongated channel **614** to facilitate axial movement of the staple driving sled **650** from a starting position (FIGS. **50-52**) to an end position (FIG. **53**) while remaining connected to the elongated channel **614**. The staple driving sled **650** has a staple driving surface or surfaces **652** thereon that are oriented to drivingly engage the staples **632** in the staple cartridge **630** and drive the staples **632** upward toward the staple forming portion **622** of the anvil **620** as the knife member **646** is distally advanced through the end effector **612**.

Also in various embodiments, a distal spine nut **668** is rotatably coupled to the proximal end **664** of the distal spine segment **660** for rotational travel relative thereto about the longitudinal axis A-A. The distal spine nut **668** has a pair of inwardly extending trunions **669** that are sized to be received in corresponding trunion slots **674** in a distal end **672** of a proximal spine segment **670** that protrudes from the handle assembly **100** to enable the distal spine segment **660** to rotate relative to the proximal spine segment **670**. As can be seen in FIG. **49**, the proximal spine segment **670** is pinned to the rotation knob **70** (by pin **66**) that is rotatably mounted to the handle assembly **100** in the above-described manner to facilitate rotation of the end effector **612** about the longitudinal axis A-A in a 360° path.

As can also be seen in FIG. **49**, a flange **676** is formed on a proximal end **671** of the proximal spine segment **670**. The flange **676** is configured to be rotatably supported within a groove **106** formed by mating ribs **108** that protrude inwardly from each of the case members **102**, **104**. Such arrangement facilitates the attachment of the proximal spine segment **670** to the handle assembly **100** while enabling the proximal spine segment **670** to be rotated relative to the handle assembly **100** about the longitudinal axis A-A in a 360° path. The proximal closure tube segment **682** may be fabricated from a polymer or other suitable material and have a proximal end **683** that is attached to a firing yoke **114** that is constructed and movably mounted within the handle assembly **100** in the various manners described above. In various embodiments for example, the firing yoke **114** may be over-molded to the proximal end **683** of the proximal closure tube segment **682**. However, other fastener arrangements may be employed. As described above, the firing yoke **114** may be rotatably supported within a support collar **120** that is configured to move axially within the handle assembly **100**. As can be seen in FIG. **49**, a longitudinal slot **681** is provided through the proximal closure tube segment **682** to enable the spine pin **66** to extend therethrough into the proximal spine segment **670** while facilitating the axial travel of the proximal closure tube segment **682** on the distal spine segment **670**.

As can be seen in FIG. **49**, the firing trigger **130** has an upper portion **134** that is pivotally (pinned) to firing links **636**, **638** that are pivotally (pinned) to the support collar **120**. Thus, movement of the firing trigger **130** toward the pistol grip portion **107** of the handle assembly **100** will cause the firing yoke **114** and the proximal closure tube segment **682** to move in the proximal direction "PD" (shown in broken lines in FIG. **49**). Movement of the clamp and firing trigger **130** away from the pistol grip portion **107** of the handle assembly **100** will cause the firing yoke **114** and firing tube **110** to move in the proximal direction "DD" on the proximal spine segment **670**.

As can be seen in FIGS. **50-53**, the proximal closure tube segment **682** has a distal end **684** that is configured to be attached to a proximal end **692** of a distal closure tube segment **690**. In the illustrated embodiment, the distal closure tube segment **690** is configured to be threadably

attached to the distal end **684** of the proximal closure tube segment **682**. The distal end **694** of the distal closure tube segment **690** has a tapered drive member **696** therein that is configured to interface with the scissors-like closure structure **628** such that when the distal closure tube segment **690** is in the position illustrated in FIG. **51**, an end effector spring or springs **617** positioned between the elongated channel **614** and the anvil **620** serves to bias the anvil **620** to the open position illustrated in that Figure. However, when the distal closure tube segment **690** is pulled in the proximal direction "PD", the tapered drive member **696** contacts the scissors-like closure structure **628** to pivot the jaws **613** (elongated channel **614**) and **615** (anvil **620**) towards each other. See FIGS. **52** and **53**.

The surgical instrument **610** may further include a knife advancement system **639** that includes knife rod **700** that extends through the proximal spine segment **670** and has a proximal end portion **702** that drivingly interfaces with a firing transmission **190** that is operably attached to a knife advance trigger **200** in the manner described above. Thus, the surgeon may advance the knife rod **700** distally by pulling the knife advancement trigger **200** as was described above. As can be seen in FIGS. **52** and **53**, the knife rod **700** has a bifurcated distal end **704** that includes an upper knife rod segment **706** and a lower knife rod segment **708** that are configured to engage the knife plate **642**. As can be seen in FIGS. **51-54**, the upper knife rod segment **706** is configured to slide through an upper slot **773** in the spine nut **668** and the lower knife rod segment **708** is configured to slide through a lower slot **775** in the spine nut **668**.

To use the surgical instrument **610**, the end effector **612** is attached to the distal end **672** of the proximal spine segment **670** by inserting the trunions **669** on the spine nut **668** into their corresponding trunion cradles **674** in the proximal spine segment **670**. See FIG. **50**. Thereafter, the surgeon or clinician may rotate the end effector **612** relative to the elongated shaft assembly **655** to thread the distal closure tube segment **690** onto the proximal closure tube segment **682** to form the closure tube assembly **680**. The end effector **612** may have the staple cartridge **630** therein or the clinician may install the staple cartridge into the elongated channel **614** at this or a later time. Once the end effector **612** has been attached to the elongated shaft assembly **655** of the surgical instrument **610**, the surgeon may insert the end effector **612** and elongated shaft assembly **655** through an access passage extending into the patient (e.g., through a trocar or endoscope, etc. or through an incision—in the case of open surgery) to grasp the target tissue between the end effector jaws **613**, **615**. As with various embodiments described above, the jaws **613**, **615** are closed by manipulating the firing trigger **130** relative to the pistol grip **107** of the handle assembly **100**. Once the target tissue has been grasped between the end effector jaws **613**, **615**, the surgeon may "fire" or form the staples **632** into the target tissue by compressing the anvil **620** into the staple cartridge **630** in the manner described above. If the procedure does not require the target tissue to be cut, the surgeon may then release the firing trigger **130** to permit the anvil **620** to move to the open position (under biasing motion from spring **617**) and thereby release the implantable staple cartridge **630** from the end effector **612**. The surgeon may then re-close the end effector jaws **613**, **615** to permit the end effector **612** to be withdrawn through an access passage or working channel. If, however, the surgeon desires to cut the target tissue between the lines of staples **632**, the surgeon may fire the knife assembly **640** by operating the knife advancement trigger **200** in the manner described above to drive the knife member **648** distally through the target tissue. As the knife member **648** moves distally through the end effector **612**, it contacts the staple driving sled **650** which serves to further drive the staples **632** into forming contact with the staple forming surface **622** of the anvil **620** to further form the staples **632**. See FIG. **53**. Thereafter, the surgeon may open the end effector **612** to release the cut/staple target tissue and implantable staple cartridge **630** therefrom.

Thus, the unique and novel closure tube arrangement which closes the jaws of the end effector by moving the closure tube distally enables smaller closure structures to be employed while still maintaining the ability to generate large closure forces required to form staples. In addition, this embodiment of the present invention provides the surgeon with the flexibility to staple tissue with out cutting it in applications not requiring the tissue to be cut.

FIGS. **56-60** illustrate an alternative surgical instrument embodiment **810** that is substantially identical to the surgical instrument **610** described above, except for the differences discussed below. The surgical instrument **810**, for example, includes a flexible spine assembly **820** that has a proximal end with a flange **822** thereon that is rotatably received within a groove **106** formed by mating ribs **108** that protrude inwardly from each of the case members **102**, **104** forming the handle assembly **100**. See FIGS. **57** and **58**. Such mounting arrangement facilitates rotational travel of the flexible spine assembly **820** relative to the handle assembly **100**. In various embodiments, the flexible spine assembly **820** may be fabricated from, for example, Nylon, Acrylonitrile butadiene styrene (ABS), polycarbonate, liquid crystal polymer, stainless steel, titanium, etc. and may be configured for use with an end effector **612** of the type described above.

The surgical instrument **810** further includes an elongated shaft assembly generally represented by **830**. In various embodiments, for example, the elongated shaft assembly **830** includes a reconfigurable shaft segment **840** and a proximal shaft segment **844**. As can be seen in FIG. **56**, for example, the reconfigurable shaft segment **840** may have a distal mounting collar **842** that is non-movably attached to a portion of the flexible spine assembly **820** by, for example, adhesive, welding, fasteners, etc. The reconfigurable shaft segment **840** is selectively reconfigurable between a linear configuration wherein all portions of the reconfigurable segment **840** are substantially coaxially aligned with each other (i.e., they form a substantially straight hollow tubular structure) and configurations wherein at least one of the portions is not coaxially or linearly aligned with another portion of the reconfigurable segment **840**. In the embodiment depicted in FIG. **56**, for example, the reconfigurable shaft segment **840** may be fabricated from Nylon, Acrylonitrile butadiene styrene (ABS), polycarbonate, etc. and have a plurality of ribs **846** that facilitate the reconfiguration of the segment **840** from a linear or coaxial alignment orientation to non-linear or non-coaxial orientations (e.g., serpentine, curved, etc.) and remain in such orientations until the user reconfigures the shaft segment **840** by hand or through the use of other surgical instruments such as grasping devices and the like. Thus, the reconfigurable shaft segment **840** is "passively articulatable" meaning that the device is not equipped with articulation means for actively controlling the articulation of the segment **840**.

In various embodiments, the proximal shaft segment **844** is coupled to the reconfigurable shaft segment **840** by, for example, interlocking features or pins and serves to facilitate rotational attachment of the reconfigurable shaft segment **840** to the handle assembly **100**. In at least one embodiment, for example, the proximal shaft segment **844** is coupled to

the mounting bushing **60** that is rotatably affixed to the handle assembly **100** as described hereinabove. See FIGS. **57** and **59**.

Also in various embodiments, a closure tube segment **832** is movably mounted on a portion of the flexible spine assembly **820** for selective movement thereon. See FIGS. **56** and **60**. As can be seen in FIG. **60**, in at least one embodiment, the closure tube segment **832** and the spine assembly **820** are formed with opposing flanged portions **833**, **821** respectively, such that the closure tube segment **832** is prevented from sliding off of the spine assembly **820** while remaining movably mounted thereon. In various embodiments, a flexible closure member **848** is coupled to, or comprises a portion of, the firing yoke **114**. See FIGS. **57** and **59**. The flexible closure member **848** may be fabricated from, for example, stainless steel, etc. and have a distal end portion **849** that extends through an elongated slot **834** in the spine assembly **820** to be coupled to the closure tube segment **832**. Such arrangement facilitates movement of the closure tube segment **832** in the distal direction "DD" and proximal direction "PD" on the spine assembly **820** by actuating the firing trigger **130** in the manners described above.

As can be seen in FIG. **56**, the surgical instrument **810** may be employed with an end effector **612** which was described in detail above. In particular, the end effector **612** may be removably coupled to the flexible spine assembly **820** by inserting the trunions **669** on the spine nut **668** into corresponding trunion slots **825** in a distal end **825** of the spine assembly **820**. See FIG. **60**. A distal end **835** of the closure tube segment **832** is configured to be threadably attached to the proximal end **692** of the distal closure tube segment **690** in the above-described manner.

In at least one embodiment, the surgical instrument **810** further includes a knife advancement system **639** that includes knife rod **700** that extends through the spine assembly **820** and has a proximal end portion **702** that drivingly interfaces with a firing transmission **190** that is operably attached to a knife advance trigger **200** in the manner described above. Thus, the surgeon may advance the knife rod **700** distally by pulling the knife advancement trigger **200** as was described above. The knife rod **700** has a bifurcated distal end **704** that includes an upper knife rod segment **706** and a lower knife rod segment **708** that are configured to engage the knife plate **642** in the end effector **612**. See FIG. **60**.

To use the surgical instrument **810**, the end effector **612** is attached to the distal end **823** of the spine assembly **820** by inserting the trunions **669** on the spine nut **668** into their corresponding trunion cradles **825**. Thereafter, the surgeon or clinician may rotate the end effector **612** to thread the distal closure tube segment **690** onto the closure tube segment **832**. The end effector **612** may have the staple cartridge **630** therein or the clinician may install the staple cartridge into the elongated channel **614** at this time. Once the end effector **612** has been attached to the elongated closure tube assembly **830** of the surgical instrument **810**, the surgeon may configure the reconfigurable shaft segment **840** such that the elongated shaft assembly portions are coaxially aligned for insertion through an opening or working channel that extends into the patient (e.g., through a trocar or endoscope, etc. or through an incision in the case of open surgery). Thereafter, the surgeon may reconfigure the reconfigurable shaft segment **840** such that portions thereof are not coaxially aligned with each other to orient the end effector **612** attached thereto in a desired position relative to the target tissue. As with various embodiments described above the jaws **613**, **615** are closed by manipulating the firing trigger **130** relative to the pistol grip **107** of the handle assembly **100**. Once the target tissue has been grasped between the end effector jaws **613**, **615**, the surgeon may "fire" or form the staples **632** into the target tissue by compressing the anvil **620** into the staple cartridge **630** in the manner described above. If the procedure does not require the target tissue to be cut, the surgeon may then release the firing trigger **130** to permit the anvil **620** to move to the open position (under biasing motion from spring **617**) and thereby release the implantable staple cartridge **630** from the end effector **612**. The surgeon may then re-close the end effector jaws **613**, **615** and reconfigure the reconfigurable shaft segment **840** to permit the end effector **612** to be withdrawn through an access passage or working channel. If, however, the surgeon desires to cut the target tissue between the lines of staples **632**, the surgeon may fire the knife assembly **640** by operating the knife advancement trigger **200** in the manner described above to drive the knife member **648** distally through the target tissue. As the knife member **648** moves distally through the end effector **612**, it contacts the staple driving sled **650** which serves to further drive the staples **632** into forming contact with the staple forming surface **622** of the anvil **620** to further form the staples **632**. Thereafter, the surgeon may open the end effector **612** to release the cut/staple target tissue and implantable staple cartridge **630** therefrom.

FIGS. **61** and **62** illustrate another surgical instrument embodiment **810'** that is substantially identical to the surgical instrument **810** embodiment described above, except for the reconfigurable shaft segment **850** which comprises a portion of an elongated shaft assembly **830'** that is operably coupled to handle assembly **100** for operating an end effector **612**. In various embodiments, the reconfigurable shaft segment **850** comprises a plurality of movably interconnected tubular links **852**. Each tubular link **852** may be fabricated from, for example, Nylon, Acrylonitrile butadiene styrene (ABS), polycarbonate with or without glass or carbon fill, etc. and have a tubular body portion **854**. The tubular body portion **854** may have a sphere-like or ball-like coupler portion **856** formed thereon that has a spine-receiving passage **858** therethrough. In addition, the tubular spine-receiving passage **858** extends into a hollow socket **860** formed in the tubular body portion **854** that is sized to movably receive the ball-like coupler portion **856** of an adjacent tubular link **852**. The ball-like coupler portions **856** are sized relative to the sockets **860** to permit the ball-like coupler portion **856** to be snapped therein and retained in a desired configuration wherein the shaft segment is in a substantially straight line to configurations wherein the shaft **850** may have a curved (FIG. **62**) or serpentine-like configuration (FIG. **61**).

While the ball-like coupler portions **856** and sockets **860** may be sized relative to each other to create a small amount of frictional force therebetween that can retain the segment **850** in a desired orientation until an external force is applied thereto, the embodiment depicted in FIGS. **60** and **61**, employs a locking system **862** to releasably retain or immovably lock the tubular links **852** together in a desired configuration. As can be seen in those Figures, the locking means **862** comprises at least one, and preferably a plurality of, flexible latch nubs or members **864** formed on the perimeter of the tubular link **852** adjacent one end **853** thereof. In a preferred embodiment, four latch nubs **864** are employed. Other embodiments could have 1, 2, 3 or more than four latch nubs **864**. Each tubular link **852** further comprises a locking member **866** that corresponds to each latch nub **864** adjacent the other end **865** of the link **852**.

Each locking member **866** has a latch-receiving notch **868** therein configured to releasably receive a portion of the corresponding latch nub **864** formed on an adjacent tubular link **852** therein.

To use the surgical instrument **810'**, the end effector **612** is attached to the distal end **823** of the spine assembly **820** in the manner described above. The distal closure tube segment **690** of the end effector **612** is threaded onto the closure tube segment **832**. Once the end effector **612** has been attached to the elongated closure tube assembly **830** of the surgical instrument **810'**, the surgeon may configure the reconfigurable shaft segment **850** such that the elongated shaft assembly portions are coaxially aligned for insertion through an opening or working channel that extends into the patient (e.g., through a trocar or endoscope, etc. or through an incision—in the case of open surgery). Thereafter, the surgeon may employ, for example, a grasping instrument **869** to configure the movable links **852** of the reconfigurable shaft segment **850** to a desired orientation and then press the appropriate locking nubs **864** on each link **852** into their corresponding latch receiving notch **868** to lock the links **852** in the desired orientation. See FIG. **62**. As with various embodiments described above, the jaws **613**, **615** are closed by manipulating the firing trigger **130** relative to the pistol grip **107** of the handle assembly **100**. Once the target tissue has been grasped between the end effector jaws **613**, **615**, the surgeon may "fire" or form the staples **632** into the target tissue by compressing the anvil **620** into the staple cartridge **630** in the manner described above. If the procedure does not require the target tissue to be cut, the surgeon may then release the firing trigger **130** to permit the anvil **620** to move to the open position (under biasing motion from spring **617**) and thereby release the implantable staple cartridge **630** from the end effector **612**. The surgeon may then re-close the end effector jaws **613**, **615** and use the grasping instrument **869** to remove the locking nubs **864** from their corresponding latch receiving notches **868** to permit the links **852** to be aligned in such a manner to permit the device to be withdrawn through an access passage or working channel. If, however, the surgeon desires to cut the target tissue between the lines of staples **632**, the surgeon may fire the knife assembly **640** by operating the knife advancement trigger **200** in the manner described above to drive the knife member **648** distally through the target tissue. As the knife member **648** moves distally through the end effector **612**, it contacts the staple driving sled **650** which serves to further drive the staples **632** into forming contact with the staple forming surface **622** of the anvil **620** to further form the staples **632**. Thereafter, the surgeon may open the end effector **612** to release the cut/stapled target tissue and implantable staple cartridge **630** therefrom.

FIGS. **63-68** illustrate another surgical instrument embodiment **810"** that is substantially identical to the surgical instrument embodiments **810**, **810'** described above, except for the reconfigurable shaft segment **870** and related locking system **882** of the elongated shaft assembly. In various embodiments, the reconfigurable shaft segment **870** comprises a plurality of movably interconnected tubular links **872** and is coupled to a proximal shaft segment **871** that is coupled to the mounting bushing **60** rotatably supported within the handle assembly **100** as discussed in detail above. Each tubular link **872** may be fabricated from, for example, Nylon, Acrylonitrile butadiene styrene (ABS), polycarbonate, etc. and have a tubular body portion **874**. See FIG. **67**. The tubular body portion **874** may have a sphere-like or ball-like coupler portion **876** formed thereon that has a spine-receiving passage **878** extending therethrough. In addition, the tubular spine-receiving passage **878** extends into a hollow socket **880** formed in the tubular body portion **854** that is sized to movably receive the ball-like coupler portion **876** of an adjacent tubular link **872**. The ball-like coupler portions **876** are sized relative to the sockets **880** to permit the ball-like coupler portion **876** to be snapped therein and retained in a desired configuration wherein the reconfigurable shaft segment **870** is in a substantially straight line (FIG. **67**) to configurations wherein the shaft **870** may have a curved (FIG. **68**) or serpentine-like configuration.

While the ball-like coupler portions **876** and sockets **880** may be, in at least one embodiment, sized relative to each other to create a small amount of frictional force therebetween that can retain tubular links **872** of the reconfigurable shaft segment **870** in desired orientations until an external force is applied thereto, the embodiment depicted in FIGS. **63-68**, employs a locking system **882** for releasably retaining or immovably locking the tubular links **872** together in a desired configuration. As can be seen in FIGS. **67** and **68**, the locking means **882** comprises at least one, and preferably two, selectively expandable locking bladders **884** that extend through the tubular links **872** in diametrically opposed positions. In various embodiments, the locking bladders **884** may be fabricated from, for example, Nylon film, etc. and be adapted to receive pressurized fluid from a source of pressurized fluid **886**. In the embodiment depicted in FIG. **64**, the source of pressurized fluid **886** comprises fluid pump arrangement **888** that is adapted to supply air under pressure into the locking bladders **884**. In particular, in at least one embodiment, the fluid pump arrangement **888** comprises a cylinder **889** that has a piston **890** therein. The piston **890** has an O-ring or other seal arrangement **891** around its perimeter and is attached to a threaded pump handle **892** that threadably engages a portion of the handle assembly **100**. Thus, by screwing the pump handle **892** into the handle assembly **100**, air in the cylinder **890** is pumped under pressure through a supply conduit **893** that extends from the cylinder **890** to a manifold assembly **894** that is received on the spine assembly **820**. The air pressure may be relieved in the locking bladders **884** by screwing the pump handle **894** in an opposite direction.

As can be seen in FIG. **65**, the manifold assembly **894** comprises an annular manifold area **895** that is sealed on each side by O-rings or other seals **896**. The annular manifold area **895** communicates with a supply line **897** that extends through the proximal shaft segment **871** and which is coupled for discharge into the locking bladders **884**. Such arrangement serves to supply pressurized air into the locking bladders **884** while facilitating the rotational travel of the spine assembly **820** about the longitudinal axis A-A relative to the handle assembly **100**. As used herein, the term pressurized fluid may comprise, for example, air, saline or preferably glycerine. In alternative embodiments, the tubular members may be filled with a very low durometer rubber or elastomer. When a pressure is applied to the rubber material, it will deform filing the voids and locking the shaft in much the same way as the fluid embodiment does.

To use the surgical instrument **810"**, the end effector **612** is attached to the distal end **823** of the spine assembly **820'** in the manner described above. The distal closure tube segment **690** of the end effector **612** is threaded onto the closure tube segment **832**. Once the end effector **612** has been attached to the elongated shaft assembly **830"** of the surgical instrument **810"**, the surgeon may configure the reconfigurable shaft segment **870** such that the elongated shaft assembly portions **830"** are coaxially aligned for

insertion through an opening or working channel that extends into the patient (e.g., through a trocar or endoscope, etc. or through an incision—in the case of open surgery). Thereafter, the surgeon may employ, for example, a grasping instrument to configure the movable links **872** of the reconfigurable shaft segment **870** to a desired orientation. Once the reconfigurable shaft segment **870** has been oriented in a desired orientation, the surgeon may then screw in the pump handle **892** into the handle housing **100** to pressurize the locking bladders **884** to lock the movable links **872** in position as shown in FIG. **68**. As with various embodiments described above, the jaws **613**, **615** are closed by manipulating the firing trigger **130** relative to the pistol grip **107** of the handle assembly **100**. Once the target tissue has been grasped between the end effector jaws **613**, **615**, the surgeon may "fire" or form the staples **632** into the target tissue by compressing the anvil **620** into the staple cartridge **630** in the manner described above. If the procedure does not require the target tissue to be cut, the surgeon may then release the firing trigger **130** to permit the anvil **620** to move to the open position (under biasing motion from spring **617**) and thereby release the implantable staple cartridge **630** from the end effector **612**. The surgeon may then re-close the end effector jaws **613**, **615** and release the pressure in the locking bladders **884** by screwing the pump handle **892** in an opposite direction. A grasping instrument may be employed to manipulate the movable links **872** to a substantially coaxially aligned orientation (FIG. **67**) or other orientation required to enable the device to be withdrawn from the patient. If, however, the surgeon desires to cut the target tissue between the lines of staples **632**, the surgeon may fire the knife assembly **640** by operating the knife advancement trigger **200** in the manner described above to drive the knife member **648** distally through the target tissue. As the knife member **648** moves distally through the end effector **612**, it contacts the staple driving sled **650** which serves to further drive the staples **632** into forming contact with the staple forming surface **622** of the anvil **620** to further form the staples **632**. Thereafter, the surgeon may open the end effector **612** to release the cut/stapled target tissue and implantable staple cartridge **630** therefrom.

The various embodiments disclosed herein that include a reconfigurable shaft segment represent a vast improvement over traditional articulatable surgical instrument arrangements that employ lockable articulation joints. Such surgical instruments are typically limited to 1 or 2 degrees of freedom for placement of the end effector at the transection site. The various embodiments of the present invention allow for a wider range of possible end effector positions and therefore provide the surgeon with much more flexibility when using the device through a single access port.

The unique and novel features of the various surgical staple cartridges and the surgical instruments of the present invention enable the staples in those cartridges to be arranged in one or more linear or non-linear lines. A plurality of such staple lines may be provided on each side of an elongated slot that is centrally disposed within the staple cartridge for receiving the tissue cutting member therethrough. In one arrangement, for example, the staples in one line may be substantially parallel with the staples in adjacent line(s) of staples, but offset therefrom. In still other embodiments, one or more lines of staples may be non-linear in nature. That is, the base of at least one staple in a line of staples may extend along an axis that is substantially transverse to the bases of other staples in the same staple line. For example, as will be discussed in further detail below, in alternative embodiments, the lines of staples on each side of the elongated slot may have a zigzag appearance. Such non-linear staple arrangements may be made possible due to the fact that the staples are not driven upwardly into the anvil. Instead in these various embodiments, the anvil is brought into forming contact with the tips of the non-moving staples. Such non-linear staple arrangements may attain better tissue fastening results with less staples than various linear staple arrangements employed in prior staple cartridges wherein the staples are actually driven upwardly into forming contact with the anvil.

FIG. **69** illustrates use of a surgical staple cartridge embodiment **900** in an end effector embodiment **612'** of the present invention. The end effector **612'** may be used in connection with the surgical instrument **610** in the various manners described above. The end effector **612'** may be identical to end effector **612** as described above except for the differences described below. As can be seen in FIGS. **69** and **70**, an embodiment of the surgical staple cartridge **900** has a cartridge body **902** that has a centrally disposed elongated slot **904** extending through a proximal end **903** to an area adjacent a distal end **605**. The elongated slot **904** is configured to permit knife body **646** of the surgical instrument **610** to axially move therethrough during a tissue cutting operation in the manner described above. In at least one embodiment, the cartridge body **902** consists of a compressible hemostat material such as, for example, oxidized regenerated cellulose ("ORC") or a bio-absorbable foam fabricated from, for example, PGA (Polyglycolic acid, sold under the trademark Vicryl), PCL (polycaprolactone), PLA or PLLA (Polyactic acid), PDS, (Polydioxanone), PHA (polyhydroxyalkanoate), PGCL (poliglecaprone 25, sold under the trademark Monocryl) or a composite of PGA, PCL, PLA and PDS in which lines **920**, **930** of unformed staples **922** are supported. However, the cartridge body **902** may be fabricated from other materials that serve to support the unformed staples **922** in a desired orientation such that they may be compressed as the anvil **910** is brought into contact therewith. As with various other embodiments described above, the staple cartridge **900** is implantable and is left attached to the stapled tissue after the stapling procedure has been completed. In at least some embodiments, in order to prevent the staples **922** from being affected and the hemostat material from being activated during the introduction and positioning process, the entire cartridge **900** may be coated or wrapped in a biodegradable film **906** such as a polydioxanon film sold under the trademark PDS® or with a Polyglycerol sebacate (PGS) film or other biodegradable films fabricated from, for example, PGA (Polyglycolic acid, marketed under the trade mark Vicryl), PCL (Polycaprolactone), PLA or PLLA (Polylactic acid), PHA (polyhydroxyalkanoate), PGCL (poliglecaprone 25, sold under the trademark Monocryl) or a composite of PGA, PCL, PLA, PDS that would be impermeable until ruptured. The cartridge body **902** of staple cartridge **900** is sized to be removably supported within the elongated channel **614** of the end effector **612'**.

In the embodiment depicted in FIGS. **69**, **73**, and **74**, the surgical staple cartridge **900** operably supports a first line **920** of staples **922** on one lateral side **907** of the elongated slot **904** and a second line **930** of staples **922** on the other lateral side **909** of the elongated slot **904**. In various embodiments, the staples **922** may be fabricated from a metal material such as, for example, Titanium, Titanium alloys (e.g., 6Al-4V Titanium, 3al-2.5V Titanium), Stainless Steel, etc. and have a staple base **924** and two upstanding staple legs **926** protruding therefrom. Each staple leg **926** may have a tissue-piercing tip **928** formed thereon. In the first line **920**

of staples **922**, the staple base **924** of at least one staple **922** overlaps the staple base of another staple **922**. In a preferred embodiment, the staple base **924** of each staple **922** overlaps the staple bases **924** of two adjacent staples **922**, except for the base **924** of the last staple **922** on each end of the first staple line **920**. See FIG. **73**. Thus, the first staple line **920** has a substantially non-linear shape. More particularly, when viewed from above, the first staple line **920** has a substantially zigzag appearance.

As can be seen in FIG. **72**, the anvil **90** has two sequential longitudinal staple forming pockets **912** that each has a substantial zigzag shape that corresponds to the shape of the first line **920** of staples **922** such that, when the anvil **910** is brought into forming contact with the staples **922**, the legs **926** thereof are formed as shown in FIG. **74**. Thus, the distal leg of one staple shares the same pocket as the proximal leg of the next staple longitudinally. Such arrangement allows for a denser pocket pattern, even to a point where the staples themselves interact (e.g., are folded over one another). In prior staple pocket arrangements, in general, there has to be between 0.005 and 0.015 inches of metal/space from one set of pockets to the next. This embodiment of the present invention, however, has a spacing arrangement from 0 to 0.02 inches of interference/overlap (essentially a –0.020") because one staple mates with the next staple, for example. Such arrangements allow for 15-30% more staples in the same space. Furthermore, when the staples interlock, there is less need for multiple lateral rows of staples. Prior arrangements commonly employ three rows on each side of the tissue cut line to prevent the existing of an open path through which blood may pass. Lines of interlocking staples are less likely to leave paths through which blood may pass. Another distinct advantage provided by the various interlocking staple arrangements of the present invention relates to improved "burst strength" which relates to the amount of force required to tear a staple line open.

Another staple forming pocket arrangement of the present invention may comprise a common staple forming pocket. As used herein, the term "common staple forming pocket" means that one forming pocket can form all of the staples in a single line of staples as opposed to prior anvil designs wherein a discrete forming pocket is provided for each leg of each staple to be formed.

FIG. **75** illustrates yet another staple embodiment **922'** wherein the base **924'** has an offset portion **928** to facilitate a tighter overlap of the bases **924'**. As indicated above, the staple cartridge **900** has a second line **930** of staples **922** supported on a second lateral side **909** of the elongated slot **904**. The second line **930** of staples **922** is substantially identical to the first line **920** of staples **922**. Thus, the anvil **910** has a second common staple forming pocket **912** that corresponds to the second line of staples **930** for forming contact therewith. In alternative embodiments, however, the second line **930** of staples **922** may differ from the first line **920** of staples in shape and, perhaps, number of staples.

FIG. **71** illustrates a surgical staple cartridge **900'** that is substantially identical to the staple cartridge **900** described above, with the exception of the lines **920'**, **930'** of staples **922** supported therein. For example, in this embodiment, the line **920'** of staples **922** are arranged relative to each other such that a base axis S-S of at least one staple base **924** is substantially transverse to the base axis S-S of the staple base **924** of at least one other adjacent staple **922**. Such predetermined pattern of staples, when viewed from above, comprises a substantially zigzag arrangement. In the embodiment depicted in FIG. **76**, the respective bases **924** of staples **922** may additionally have a base support member **927** overmolded thereon as shown. In various embodiments, the base support member **927** may be fabricated from, for example, non-absorbable plastic such as Polyether ether ketone "PEEK" or absorbable plastic such as, for example, Polyglycolic acid "PGA", Polylactic acid "PLA" or "PLLA", Polydioxanone "PDS", PCL (polycaprolactone), PHA (polyhydroxyalkanoate), PGCL (poliglecaprone 25, sold under the trademark Monocryl) or various composite mixes if PGS, PDS, PLA, PGA, and PCL. The base support members **927** facilitate interlocking between the staples without making the staples themselves overlap. Thus, such arrangements could form staples with "B" shapes or inverted "W" shapes without the legs of the staples themselves overlapping. However, the crowns are connected by the base support members so they act like overlapping staples. Such arrangements allow the combined pockets to have two discrete paths for each leg.

The embodiment depicted in FIG. **77** employs a staple line **920"** wherein the legs **926** of adjacent staples **922** are coupled together by a coupler portion **929** molded or otherwise attached thereto. Each coupler portion **929** may be fabricated from, for example, Polyether ether ketone "PEEK" or absorbable plastic such as, for example, Polyglycolic acid "PGA", Polylactic acid "PLA" or "PLLA", Polydioxanone "PDS", PCL (polycaprolactone), PHA (polyhydroxyalkanoate), PGCL (poliglecaprone 25, sold under the trademark Monocryl) or various composite mixes if PGS, PDS, PLA, PGA, and PCL. Such staple line **920"** has substantial zigzag appearance when viewed from above. While the various surgical staple cartridge embodiments **900**, **900'** have been explained with reference to use with the end effectors **612'** and the surgical stapling instrument **610**, it will be understood that the staple cartridges **900**, **900'** may be effectively employed with the various other end effectors and surgical instruments described hereinabove, with appropriate staple forming pocket arrangements being provided in the anvils of those instruments in order to achieved the desired amount of staple formation upon movement of the anvils into forming contact with the staples.

FIGS. **78** and **79** illustrate another surgical staple cartridge **940** embodiment supported in an elongated channel **14** of a surgical instrument **10** of the present invention. In at least one embodiment, the surgical staple cartridge **940** includes a cartridge body **942** that has a centrally disposed elongated slot **944** extending at least partially therethrough. The elongated slot **944** is configured to permit a knife body of the surgical instrument **10** to axially move therethrough during a tissue cutting operation in the manner described above. In various embodiments, the cartridge body **942** consists of a compressible hemostat material such as, for example, oxidized regenerated cellulose ("ORC") or a bio-absorbable foam of the types described above or below in which lines **946**, **948**, **950**, **952** of unformed staples **922** are supported. In at least some embodiments, in order to prevent the staples **922** from being affected and the hemostat material from being activated during the introduction and positioning process, the entire cartridge **940** may be coated or wrapped in a biodegradable film **954** such as a polydioxanon film sold under the trademark PDS® or with a Polyglycerol sebacate (PGS) film or other biodegradable films fabricated from, for example, PGA (Polyglycolic acid, marketed under the trade mark Vicryl), PCL (Polycaprolactone), PLA or PLLA (Polylactic acid), PHA (polyhydroxyalkanoate), PGCL (poliglecaprone 25, sold under the trademark Monocryl) or a composite of PGA, PCL, PLA, PDS that would be impermeable until ruptured.

In the embodiment depicted in FIG. **78**, the cartridge **940** further includes a cartridge support member **960** that is coupled to the cartridge body **942**. In various embodiments, the cartridge support member **960** may be fabricated from a rigid material such as, for example, Titanium, Stainless Steel, Aluminum, any alloy of the foregoing, etc. and may be partially embedded within the cartridge body **942**. In various embodiments, the cartridge support member **960** may be held in place by, for example, film **954**. In still other embodiments wherein a limited bond is desired, sporadic use of cyanoacylate could be used to "glue" the two components together. In yet other embodiments, the cartridge body **942** may be heated and "welded" or "fused" to the cartridge support member **960**. In various embodiments, the cartridge support member **960** forms at least a portion of the bottom surface of the cartridge body **942** for mating with the elongated channel **14**. In a preferred embodiment, the cartridge support member **960** has one or more snap features **962** protruding therefrom for releasably coupling the cartridge support member **960** to the elongated channel **14**. Other forms of snap features/fastener arrangements may be employed for releasably coupling the cartridge support member **960** to the elongated channel **14**.

In various embodiments, the cartridge support member **960** has a series of support ridges **964**, **966**, **968**, **970**, **972**, **974**, **976** formed thereon to provide some lateral support to the bases **924** of the staples **922** in the staple lines **946**, **948**, **950**, **952** as shown in FIG. **78**. Thus, in at least some embodiments, the support ridges are substantially coextensive with the staple lines. FIG. **80** illustrates an alternative staple cartridge embodiment **940'** that is substantially identical to cartridge **940**, except for the inclusion of upstanding fin portions **978**, **979**, **980**, **981**, **982**, **983** that protrude from the support ridges **964**, **966**, **968**, **970**, **972**, **976**, respectively to provide additional lateral support to the staples **922**. In various embodiments, the fin portions may be integrally formed with the cartridge support member **960** and have a height that is about % or less of the height of the cartridge. Thus, in preferred embodiments, for example, any standing features supporting the foam cannot extend above the maximum compression height of the foam. Thus, if the cartridge is designed, for example, to compress to ⅓ of its original height when fired, the fins would between 66% of the uncompressed height, all the way down to 10% of uncompressed height.

In use, once the staples **922** have been formed through contact with the anvil **20** in the manner described above, the anvil **20** is opened and the end effector **12** is pulled away from the stapled tissue. As the end effector **12** is pulled away from the stapled tissue, the cartridge body **942** remains fastened to the stapled tissue and is then separated from the cartridge support member **960** which remains coupled to the elongated channel **14**. In various embodiments, the cartridge support member **960** is provided with a color that differs from the color of the material comprising the cartridge body **942** as well as the color of the elongated channel **14**. Such arrangement provides the surgeon with an easily recognizable indication that no staple cartridge is present within the end effector. Thus, the surgeon will not inadvertently attempt to reinsert/use the end effector without first installing a new staple cartridge therein. To do so, the surgeon simply disconnects the snap features of the cartridge support member **960** from the elongated channel **14** to enable the cartridge support member **960** of a new staple cartridge **940** to be placed therein. While the staple cartridges **940**, **940'** have been explained with reference to surgical instrument **10**, it will be understood that those cartridges may be effectively employed with many of the other surgical instrument embodiments disclosed herein without departing from the spirit and scope of the present invention.

FIGS. **81** and **82** illustrate use of a surgical instrument embodiment **10** in connection with an end effector **990** that is substantially identical to end effector **12** described above except for a closure lockout arrangement **991** that is movably coupled to or otherwise supported within the elongated channel **14**. In various embodiments, the closure lockout arrangement **991** includes a lockout arm **992** that has a distal end **993** and a proximal end **994**. The lockout arm **992** is pivotally coupled to the elongated channel about a pivot member or trunion **995**. The distal end portion has a leaf spring **996** or other biasing member attached thereto to bias the lockout arm **992** into an actuated or locking position wherein the proximal end portion **994** engages the distal end **141** of the first firing collar **141** to prevent the first firing collar **140** to be distally advanced to a "fired" position. However, when a staple cartridge **30** is installed in the elongated channel **14**, the staple cartridge **30** causes the lockout arm **992** to move into an unactuated or unlocked position such that the firing collar **140** may be advanced distally past the lockout arm **992** to complete the staple firing process. See FIG. **81**.

When in the locked position, the firing collar **140** cannot be advanced distally to complete the firing process. In addition, the firing trigger **130** cannot be advanced to the fully fired position wherein the knife lockout bar **210** is moved to an unlocked position to thereby enable the surgeon to advance the knife bar **172**. Thus, when there is no cartridge present within the end effector **990**, the closure lockout arrangement **991** is in the locked position which ultimately prevents the knife bar **172** from being advanced. As such, the surgeon is unable to advance the knife bar **172** to cut tissue unless a cartridge **30** is present within the end effector **990**. It will be understood that the closure lockout arrangement **991** as described above may be effectively incorporated into many of the surgical instrument embodiments disclosed herein without departing from the spirit and scope of the present invention.

In various embodiments, a staple cartridge can comprise a cartridge body and a plurality of staples stored within the cartridge body. In use, the staple cartridge can be introduced into a surgical site and positioned on a side of the tissue being treated. In addition, a staple-forming anvil can be positioned on the opposite side of the tissue. In various embodiments, the anvil can be carried by a first jaw and the staple cartridge can be carried by a second jaw, wherein the first jaw and/or the second jaw can be moved toward the other. Once the staple cartridge and the anvil have been positioned relative to the tissue, the staples can be ejected from the staple cartridge body such that the staples can pierce the tissue and contact the staple-forming anvil. Once the staples have been deployed from the staple cartridge body, the staple cartridge body can then be removed from the surgical site. In various embodiments disclosed herein, a staple cartridge, or at least a portion of a staple cartridge, can be implanted with the staples. In at least one such embodiment, as described in greater detail further below, a staple cartridge can comprise a cartridge body which can be compressed, crushed, and/or collapsed by the anvil when the anvil is moved from an open position into a closed position. When the cartridge body is compressed, crushed, and/or collapsed, the staples positioned within the cartridge body can be deformed by the anvil. Alternatively, the jaw supporting the staple cartridge can be moved toward the anvil into a closed position. In either event, in various embodi-

ments, the staples can be deformed while they are at least partially positioned within the cartridge body. In certain embodiments, the staples may not be ejected from the staple cartridge while, in some embodiments, the staples can be ejected from the staple cartridge along with a portion of the cartridge body.

Referring now to FIGS. **83**A-**83**D, a compressible staple cartridge, such as staple cartridge **1000**, for example, can comprise a compressible, implantable cartridge body **1010** and, in addition, a plurality of staples **1020** positioned in the compressible cartridge body **1010**, although only one staple **1020** is depicted in FIGS. **83**A-**83**D. FIG. **83**A illustrates the staple cartridge **1000** supported by a staple cartridge support, or staple cartridge channel, **1030**, wherein the staple cartridge **1000** is illustrated in an uncompressed condition. In such an uncompressed condition, the anvil **1040** may or may not be in contact with the tissue T. In use, the anvil **1040** can be moved from an open position into contact with the tissue T as illustrated in FIG. **83**B and position the tissue T against the cartridge body **1010**. Even though the anvil **1040** can position the tissue T against a tissue-contacting surface **1019** of staple cartridge body **1010**, referring again to FIG. **83**B, the staple cartridge body **1010** may be subjected to little, if any, compressive force or pressure at such point and the staples **1020** may remain in an unformed, or unfired, condition. As illustrated in FIGS. **83**A and **83**B, the staple cartridge body **1010** can comprise one or more layers and the staple legs **1021** of staples **1020** can extend upwardly through these layers. In various embodiments, the cartridge body **1010** can comprise a first layer **1011**, a second layer **1012**, a third layer **1013**, wherein the second layer **1012** can be positioned intermediate the first layer **1011** and the third layer **1013**, and a fourth layer **1014**, wherein the third layer **1013** can be positioned intermediate the second layer **1012** and the fourth layer **1014**. In at least one embodiment, the bases **1022** of the staples **1020** can be positioned within cavities **1015** in the fourth layer **1014** and the staple legs **1021** can extend upwardly from the bases **1022** and through the fourth layer **1014**, the third layer **1013**, and the second layer **1012**, for example. In various embodiments, each deformable leg **1021** can comprise a tip, such as sharp tip **1023**, for example, which can be positioned in the second layer **1012**, for example, when the staple cartridge **1000** is in an uncompressed condition. In at least one such embodiment, the tips **1023** may not extend into and/or through the first layer **1011**, wherein, in at least one embodiment, the tips **1023** may not protrude through the tissue-contacting surface **1019** when the staple cartridge **1000** is in an uncompressed condition. In certain other embodiments, the sharp tips **1023** may be positioned in the third layer **1013**, and/or any other suitable layer, when the staple cartridge is in an uncompressed condition. In various alternative embodiments, a cartridge body of a staple cartridge may have any suitable number of layers such as less than four layers or more than four layers, for example.

In various embodiments, as described in greater detail below, the first layer **1011** can be comprised of a buttress material and/or plastic material, such as polydioxanone (PDS) and/or polyglycolic acid (PGA), for example, and the second layer **1012** can be comprised of a bioabsorbable foam material and/or a compressible hemostatic material, such as oxidized regenerated cellulose (ORC), for example. In various embodiments, one or more of the first layer **1011**, the second layer **1012**, the third layer **1013**, and the fourth layer **1014** may hold the staples **1020** within the staple cartridge body **1010** and, in addition, maintain the staples **1020** in alignment with one another. In various embodiments, the third layer **1013** can be comprised of a buttress material, or a fairly incompressible or inelastic material, which can be configured to hold the staple legs **1021** of the staples **1020** in position relative to one another. Furthermore, the second layer **1012** and the fourth layer **1014**, which are positioned on opposite sides of the third layer **1013**, can stabilize, or reduce the movement of, the staples **1020** even though the second layer **1012** and the fourth layer **1014** can be comprised of a compressible foam or elastic material. In certain embodiments, the staple tips **1023** of the staple legs **1021** can be at least partially embedded in the first layer **1011**. In at least one such embodiment, the first layer **1011** and the third layer **1013** can be configured to co-operatively and firmly hold the staple legs **1021** in position. In at least one embodiment, the first layer **1011** and the third layer **1013** can each be comprised of a sheet of bioabsorbable plastic, such as polyglycolic acid (PGA) which is marketed under the trade name Vicryl, polylactic acid (PLA or PLLA), polydioxanone (PDS), polyhydroxyalkanoate (PHA), poliglecaprone 25 (PGCL) which is marketed under the trade name Monocryl, polycaprolactone (PCL), and/or a composite of PGA, PLA, PDS, PHA, PGCL and/or PCL, for example, and the second layer **1012** and the fourth layer **1014** can each be comprised of at least one hemostatic material or agent.

Although the first layer **1011** can be compressible, the second layer **1012** can be substantially more compressible than the first layer **1011**. For example, the second layer **1012** can be about twice as compressible, about three times as compressible, about four times as compressible, about five times as compressible, and/or about ten times as compressible, for example, as the first layer **1011**. Stated another way, the second layer **1012** may compress about two times, about three times, about four times, about five times, and/or about ten times as much as first layer **1011**, for a given force. In certain embodiments, the second layer **1012** can be between about twice as compressible and about ten times as compressible, for example, as the first layer **1011**. In at least one embodiment, the second layer **1012** can comprise a plurality of air voids defined therein, wherein the amount and/or size of the air voids in the second layer **1012** can be controlled in order to provide a desired compressibility of the second layer **1012**. Similar to the above, although the third layer **1013** can be compressible, the fourth layer **1014** can be substantially more compressible than the third layer **1013**. For example, the fourth layer **1014** can be about twice as compressible, about three times as compressible, about four times as compressible, about five times as compressible, and/or about ten times as compressible, for example, as the third layer **1013**. Stated another way, the fourth layer **1014** may compress about two times, about three times, about four times, about five times, and/or about ten times as much as third layer **1013**, for a given force. In certain embodiments, the fourth layer **1014** can be between about twice as compressible and about ten times as compressible, for example, as the third layer **1013**. In at least one embodiment, the fourth layer **1014** can comprise a plurality of air voids defined therein, wherein the amount and/or size of the air voids in the fourth layer **1014** can be controlled in order to provide a desired compressibility of the fourth layer **1014**. In various circumstances, the compressibility of a cartridge body, or cartridge body layer, can be expressed in terms of a compression rate, i.e., a distance in which a layer is compressed for a given amount of force. For example, a layer having a high compression rate will compress a larger distance for a given amount of compressive force applied to the layer as compared to a layer having a lower compression

rate. This being said, the second layer **1012** can have a higher compression rate than the first layer **1011** and, similarly, the fourth layer **1014** can have a higher compression rate than the third layer **1013**. In various embodiments, the second layer **1012** and the fourth layer **1014** can be comprised of the same material and can comprise the same compression rate. In various embodiments, the second layer **1012** and the fourth layer **1014** can be comprised of materials having different compression rates. Similarly, the first layer **1011** and the third layer **1013** can be comprised of the same material and can comprise the same compression rate. In certain embodiments, the first layer **1011** and the third layer **1013** can be comprised of materials having different compression rates.

As the anvil **1040** is moved toward its closed position, the anvil **1040** can contact tissue T and apply a compressive force to the tissue T and the staple cartridge **1000**, as illustrated in FIG. **83**C. In such circumstances, the anvil **1040** can push the top surface, or tissue-contacting surface **1019**, of the cartridge body **1010** downwardly toward the staple cartridge support **1030**. In various embodiments, the staple cartridge support **1030** can comprise a cartridge support surface **1031** which can be configured to support the staple cartridge **1000** as the staple cartridge **1000** is compressed between the cartridge support surface **1031** and the tissue-contacting surface **1041** of anvil **1040**. Owing to the pressure applied by the anvil **1040**, the cartridge body **1010** can be compressed and the anvil **1040** can come into contact with the staples **1020**. More particularly, in various embodiments, the compression of the cartridge body **1010** and the downward movement of the tissue-contacting surface **1019** can cause the tips **1023** of the staple legs **1021** to pierce the first layer **1011** of cartridge body **1010**, pierce the tissue T, and enter into forming pockets **1042** in the anvil **1040**. As the cartridge body **1010** is further compressed by the anvil **1040**, the tips **1023** can contact the walls defining the forming pockets **1042** and, as a result, the legs **1021** can be deformed or curled inwardly, for example, as illustrated in FIG. **83**C. As the staple legs **1021** are being deformed, as also illustrated in FIG. **83**C, the bases **1022** of the staples **1020** can be in contact with or supported by the staple cartridge support **1030**. In various embodiments, as described in greater detail below, the staple cartridge support **1030** can comprise a plurality of support features, such as staple support grooves, slots, or troughs **1032**, for example, which can be configured to support the staples **1020**, or at least the bases **1022** of the staples **1020**, as the staples **1020** are being deformed. As also illustrated in FIG. **83**C, the cavities **1015** in the fourth layer **1014** can collapse as a result of the compressive force applied to the staple cartridge body **1010**. In addition to the cavities **1015**, the staple cartridge body **1010** can further comprise one or more voids, such as voids **1016**, for example, which may or may not comprise a portion of a staple positioned therein, that can be configured to allow the cartridge body **1010** to collapse. In various embodiments, the cavities **1015** and/or the voids **1016** can be configured to collapse such that the walls defining the cavities and/or walls deflect downwardly and contact the cartridge support surface **1031** and/or contact a layer of the cartridge body **1010** positioned underneath the cavities and/or voids.

Upon comparing FIG. **83**B and FIG. **83**C, it is evident that the second layer **1012** and the fourth layer **1014** have been substantially compressed by the compressive pressure applied by the anvil **1040**. It may also be noted that the first layer **1011** and the third layer **1013** have been compressed as well. As the anvil **1040** is moved into its closed position, the anvil **1040** may continue to further compress the cartridge body **1010** by pushing the tissue-contacting surface **1019** downwardly toward the staple cartridge support **1030**. As the cartridge body **1010** is further compressed, the anvil **1040** can deform the staples **1020** into their completely-formed shape as illustrated in FIG. **83**D. Referring to FIG. **83**D, the legs **1021** of each staple **1020** can be deformed downwardly toward the base **1022** of each staple **1020** in order to capture at least a portion of the tissue T, the first layer **1011**, the second layer **1012**, the third layer **1013**, and the fourth layer **1014** between the deformable legs **1021** and the base **1022**. Upon comparing FIGS. **83**C and **83**D, it is further evident that the second layer **1012** and the fourth layer **1014** have been further substantially compressed by the compressive pressure applied by the anvil **1040**. It may also be noted upon comparing FIGS. **83**C and **83**D that the first layer **1011** and the third layer **1013** have been further compressed as well. After the staples **1020** have been completely, or at least sufficiently, formed, the anvil **1040** can be lifted away from the tissue T and the staple cartridge support **1030** can be moved away, and/or detached from, the staple cartridge **1000**. As depicted in FIG. **83**D, and as a result of the above, the cartridge body **1010** can be implanted with the staples **1020**. In various circumstances, the implanted cartridge body **1010** can support the tissue along the staple line. In some circumstances, a hemostatic agent, and/or any other suitable therapeutic medicament, contained within the implanted cartridge body **1010** can treat the tissue over time. A hemostatic agent, as mentioned above, can reduce the bleeding of the stapled and/or incised tissue while a bonding agent or tissue adhesive can provide strength to the tissue over time. The implanted cartridge body **1010** can be comprised of materials such as ORC (oxidized regenerated cellulous), protein matrix, polyglycolic acid (PGA) which is marketed under the trade name Vicryl, polylactic acid (PLA or PLLA), polydioxanone (PDS), polyhydroxyalkanoate (PHA), poliglecaprone 25 (PGCL) which is marketed under the trade name Monocryl, polycaprolactone (PCL), and/or a composite of PGA, PLA, PDS, PHA, PGCL and/or PCL, for example. In certain circumstances, the cartridge body **1010** can comprise an antibiotic and/or anti-microbial material, such as colloidal silver and/or triclosan, for example, which can reduce the possibility of infection in the surgical site.

In various embodiments, the layers of the cartridge body **1010** can be connected to one another. In at least one embodiment, the second layer **1012** can be adhered to the first layer **1011**, the third layer **1013** can be adhered to the second layer **1012**, and the fourth layer **1014** can be adhered to the third layer **1013** utilizing at least one adhesive, such as fibrin and/or protein hydrogel, for example. In certain embodiments, although not illustrated, the layers of the cartridge body **1010** can be connected together by interlocking mechanical features. In at least one such embodiment, the first layer **1011** and the second layer **1012** can each comprise corresponding interlocking features, such as a tongue and groove arrangement and/or a dovetail joint arrangement, for example. Similarly, the second layer **1012** and the third layer **1013** can each comprise corresponding interlocking features while the third layer **1013** and the fourth layer **1014** can each comprise corresponding interlocking features. In certain embodiments, although not illustrated, the staple cartridge **1000** can comprise one or more rivets, for example, which can extend through one or more layers of the cartridge body **1010**. In at least one such embodiment, each rivet can comprise a first end, or head, positioned adjacent to the first layer **1011** and a second head

positioned adjacent to the fourth layer **1014** which can be either assembled to or formed by a second end of the rivet. Owing to the compressible nature of the cartridge body **1010**, in at least one embodiment, the rivets can compress the cartridge body **1010** such that the heads of the rivets can be recessed relative to the tissue-contacting surface **1019** and/or the bottom surface **1018** of the cartridge body **1010**, for example. In at least one such embodiment, the rivets can be comprised of a bioabsorbable material, such as polyglycolic acid (PGA) which is marketed under the trade name Vicryl, polylactic acid (PLA or PLLA), polydioxanone (PDS), polyhydroxyalkanoate (PHA), poliglecaprone 25 (PGCL) which is marketed under the trade name Monocryl, polycaprolactone (PCL), and/or a composite of PGA, PLA, PDS, PHA, PGCL and/or PCL, for example. In certain embodiments, the layers of the cartridge body **1010** may not be connected to one another other than by the staples **1020** contained therein. In at least one such embodiment, the frictional engagement between the staple legs **1021** and the cartridge body **1010**, for example, can hold the layers of the cartridge body **1010** together and, once the staples have been formed, the layers can be captured within the staples **1020**. In certain embodiments, at least a portion of the staple legs **1021** can comprise a roughened surface or rough coating which can increase the friction forces between the staples **1020** and the cartridge body **1010**.

As described above, a surgical instrument can comprise a first jaw including the staple cartridge support **1030** and a second jaw including the anvil **1040**. In various embodiments, as described in greater detail further below, the staple cartridge **1000** can comprise one or more retention features which can be configured to engage the staple cartridge support **1030** and, as a result, releasably retain the staple cartridge **1000** to the staple cartridge support **1030**. In certain embodiments, the staple cartridge **1000** can be adhered to the staple cartridge support **1030** by at least one adhesive, such as fibrin and/or protein hydrogel, for example. In use, in at least one circumstance, especially in laparoscopic and/or endoscopic surgery, the second jaw can be moved into a closed position opposite the first jaw, for example, such that the first and second jaws can be inserted through a trocar into a surgical site. In at least one such embodiment, the trocar can define an approximately 5 mm aperture, or cannula, through which the first and second jaws can be inserted. In certain embodiments, the second jaw can be moved into a partially-closed position intermediate the open position and the closed position which can allow the first and second jaws to be inserted through the trocar without deforming the staples **1020** contained in the staple cartridge body **1010**. In at least one such embodiment, the anvil **1040** may not apply a compressive force to the staple cartridge body **1010** when the second jaw is in its partially-closed intermediate position while, in certain other embodiments, the anvil **1040** can compress the staple cartridge body **1010** when the second jaw is in its partially-closed intermediate position. Even though the anvil **1040** can compress the staple cartridge body **1010** when it is in such an intermediate position, the anvil **1040** may not sufficiently compress the staple cartridge body **1010** such that the anvil **1040** comes into contact with the staples **1020** and/or such that the staples **1020** are deformed by the anvil **1040**. Once the first and second jaws have been inserted through the trocar into the surgical site, the second jaw can be opened once again and the anvil **1040** and the staple cartridge **1000** can be positioned relative to the targeted tissue as described above.

In various embodiments, referring now to FIGS. **84**A-**84**D, an end effector of a surgical stapler can comprise an implantable staple cartridge **1100** positioned intermediate an anvil **1140** and a staple cartridge support **1130**. Similar to the above, the anvil **1140** can comprise a tissue-contacting surface **1141**, the staple cartridge **1100** can comprise a tissue-contacting surface **1119**, and the staple cartridge support **1130** can comprise a support surface **1131** which can be configured to support the staple cartridge **1100**. Referring to FIG. **84**A, the anvil **1140** can be utilized to position the tissue T against the tissue contacting surface **1119** of staple cartridge **1100** without deforming the staple cartridge **1100** and, when the anvil **1140** is in such a position, the tissue-contacting surface **1141** can be positioned a distance **1101***a* away from the staple cartridge support surface **1131** and the tissue-contacting surface **1119** can be positioned a distance **1102***a* away from the staple cartridge support surface **1131**. Thereafter, as the anvil **1140** is moved toward the staple cartridge support **1130**, referring now to FIG. **84**B, the anvil **1140** can push the top surface, or tissue-contacting surface **1119**, of staple cartridge **1100** downwardly and compress the first layer **1111** and the second layer **1112** of cartridge body **1110**. As the layers **1111** and **1112** are compressed, referring again to FIG. **84**B, the second layer **1112** can be crushed and the legs **1121** of staples **1120** can pierce the first layer **1111** and enter into the tissue T. In at least one such embodiment, the staples **1120** can be at least partially positioned within staple cavities, or voids, **1115** in the second layer **1112** and, when the second layer **1112** is compressed, the staple cavities **1115** can collapse and, as a result, allow the second layer **1112** to collapse around the staples **1120**. In various embodiments, the second layer **1112** can comprise cover portions **1116** which can extend over the staple cavities **1115** and enclose, or at least partially enclose, the staple cavities **1115**. FIG. **84**B illustrates the cover portions **1116** being crushed downwardly into the staple cavities **1115**. In certain embodiments, the second layer **1112** can comprise one or more weakened portions which can facilitate the collapse of the second layer **1112**. In various embodiments, such weakened portions can comprise score marks, perforations, and/or thin cross-sections, for example, which can facilitate a controlled collapse of the cartridge body **1110**. In at least one embodiment, the first layer **1111** can comprise one or more weakened portions which can facilitate the penetration of the staple legs **1121** through the first layer **1111**. In various embodiments, such weakened portions can comprise score marks, perforations, and/or thin cross-sections, for example, which can be aligned, or at least substantially aligned, with the staple legs **1121**.

When the anvil **1140** is in a partially closed, unfired position, referring again to FIG. **84**A, the anvil **1140** can be positioned a distance **1101***a* away from the cartridge support surface **1131** such that a gap is defined therebetween. This gap can be filled by the staple cartridge **1100**, having a staple cartridge height **1102***a*, and the tissue T. As the anvil **1140** is moved downwardly to compress the staple cartridge **1100**, referring again to FIG. **84**B, the distance between the tissue contacting surface **1141** and the cartridge support surface **1131** can be defined by a distance **1101***b* which is shorter than the distance **1101***a*. In various circumstances, the gap between the tissue-contacting surface **1141** of anvil **1140** and the cartridge support surface **1131**, defined by distance **1101***b*, may be larger than the original, undeformed staple cartridge height **1102***a*. As the anvil **1140** is moved closer to the cartridge support surface **1131**, referring now to FIG. **84**C, the second layer **1112** can continue to collapse and the distance between the staple legs **1121** and the forming pockets **1142** can decrease. Similarly, the distance between the tissue-contacting surface **1141** and the cartridge support

surface **1131** can decrease to a distance **1101***c* which, in various embodiments, may be greater than, equal to, or less than the original, undeformed cartridge height **1102***a*. Referring now to FIG. **84**D, the anvil **1140** can be moved into a final, fired position in which the staples **1120** have been fully formed, or at least formed to a desired height. In such a position, the tissue-contacting surface **1141** of anvil **1140** can be a distance **1101***d* away from the cartridge support surface **1131**, wherein the distance **1101***d* can be shorter than the original, undeformed cartridge height **1102***a*. As also illustrated in FIG. **84**D, the staple cavities **1115** may be fully, or at least substantially, collapsed and the staples **1120** may be completely, or at least substantially, surrounded by the collapsed second layer **1112**. In various circumstances, the anvil **1140** can be thereafter moved away from the staple cartridge **1100**. Once the anvil **1140** has been disengaged from the staple cartridge **1100**, the cartridge body **1110** can at least partially re-expand in various locations, i.e., locations intermediate adjacent staples **1120**, for example. In at least one embodiment, the crushed cartridge body **1110** may not resiliently re-expand. In various embodiments, the formed staples **1120** and, in addition, the cartridge body **1110** positioned intermediate adjacent staples **1120** may apply pressure, or compressive forces, to the tissue T which may provide various therapeutic benefits.

As discussed above, referring again to the embodiment illustrated in FIG. **84**A, each staple **1120** can comprise staple legs **1121** extending therefrom. Although staples **1120** are depicted as comprising two staple legs **1121**, various staples can be utilized which can comprise one staple leg or, alternatively, more than two staple legs, such as three staple legs or four staple legs, for example. As illustrated in FIG. **84**A, each staple leg **1121** can be embedded in the second layer **1112** of the cartridge body **1110** such that the staples **1120** are secured within the second layer **1112**. In various embodiments, the staples **1120** can be inserted into the staple cavities **1115** in cartridge body **1110** such that the tips **1123** of the staple legs **1121** enter into the cavities **1115** before the bases **1122**. After the tips **1123** have been inserted into the cavities **1115**, in various embodiments, the tips **1123** can be pressed into the cover portions **1116** and incise the second layer **1112**. In various embodiments, the staples **1120** can be seated to a sufficient depth within the second layer **1112** such that the staples **1120** do not move, or at least substantially move, relative to the second layer **1112**. In certain embodiments, the staples **1120** can be seated to a sufficient depth within the second layer **1112** such that the bases **1122** are positioned or embedded within the staple cavities **1115**. In various other embodiments, the bases **1122** may not be positioned or embedded within the second layer **1112**. In certain embodiments, referring again to FIG. **84**A, the bases **1122** may extend below the bottom surface **1118** of the cartridge body **1110**. In certain embodiments, the bases **1122** can rest on, or can be directly positioned against, the cartridge support surface **1130**. In various embodiments, the cartridge support surface **1130** can comprise support features extending therefrom and/or defined therein wherein, in at least one such embodiment, the bases **1122** of the staples **1120** may be positioned within and supported by one or more support grooves, slots, or troughs, **1132**, for example, in the staple cartridge support **1130**, as described in greater detail further below.

Further to the above, referring now to FIG. **85**, the bases **1122** of the staples **1120** can be positioned directly against the support surface **1131** of staple cartridge support **1130**. In various embodiments, including embodiments where the staple bases **1122** comprise circular or arcuate bottom surfaces **1124**, for example, the staple bases **1122** may move or slide along the staple cartridge support surface **1131**. Such sliding can occur when the anvil **1140** is pressed against the tips **1123** of the staple legs **1121** during the staple forming process. In certain embodiments, as described above and referring now to FIG. **86**, the staple cartridge support **1130** can comprise one or more support slots **1132** therein which can be configured to eliminate, or at least reduce, the relative movement between the staple bases **1122** and the cartridge support surface **1131**. In at least one such embodiment, each support slot **1132** can be defined by a surface contour which matches, or at least substantially matches, the contour of the bottom surface of the staple positioned therein. For example, the bottom surface **1124** of the base **1122** depicted in FIG. **86** can comprise a circular, or at least substantially circular, surface and the support slot **1132** can also comprise a circular, or at least substantially circular, surface. In at least one such embodiment, the surface defining the slot **1132** can be defined by a radius of curvature which is greater than or equal to a radius of curvature which defines bottom surface **1124**. Although the slots **1132** may assist in preventing or reducing relative sliding movement between the staples **1120** and the staple cartridge support **1130**, the slots **1132** may also be configured to prevent or reduce relative rotational movement between the staples **1120** and the staple cartridge support **1130**. More particularly, in at least one embodiment, the slots **1132** can be configured to closely receive the bases **1122** in order to prevent or reduce the rotation of the staples **1120** about axes **1129**, for example, such that the staples **1120** do not rotate or twist when they are being deformed.

In various embodiments, further to the above, each staple **1120** can be formed from a round, or an at least substantially round, wire. In certain embodiments, the legs and the base of each staple can be formed from a wire having a non-circular cross-section, such as a rectangular cross-section, for example. In at least one such embodiment, the staple cartridge support **1130** can comprise corresponding non-circular slots, such as rectangular slots, for example, configured to receive the bases of such staples. In various embodiments, referring now to FIG. **87**, each staple **1120** can comprise a crown, such as a crown **1125**, for example, overmolded onto a base **1122** wherein each crown **1125** can be positioned within a support slot in the staple cartridge support **1130**. In at least one such embodiment, each crown **1125** can comprise a square and/or rectangular cross-section, for example, which can be configured to be received within square and/or rectangular slots **1134**, for example, in the staple cartridge support **1130**. In various embodiments, the crowns **1125** can be comprised of a bioabsorbable plastic, such as polyglycolic acid (PGA) which is marketed under the trade name Vicryl, polylactic acid (PLA or PLLA), polydioxanone (PDS), polyhydroxyalkanoate (PHA), poliglecaprone 25 (PGCL) which is marketed under the trade name Monocryl, polycaprolactone (PCL), and/or a composite of PGA, PLA, PDS, PHA, PGCL and/or PCL, for example, and can be formed around the bases **1122** of the staples **1120** by an injection molding process, for example. Various crowns and methods for forming various crowns are disclosed in U.S. patent application Ser. No. 11/541,123, entitled SURGICAL STAPLES HAVING COMPRESSIBLE OR CRUSHABLE MEMBERS FOR SECURING TISSUE THEREIN AND STAPLING INSTRUMENTS FOR DEPLOYING THE SAME, filed on Sep. 29, 2006, now U.S. Pat. No. 7,794,475, the entire disclosure of which is incorporated be reference herein. Referring again to FIG. **87**, the slots **1134** can further comprise lead-ins, or bevels,

1135 which can be configured to facilitate the insertion of the crowns 1125 into the slots 1134. In various embodiments, the bases and/or crowns of the staples 1120 may be positioned within the slots 1134 when the staple cartridge 1100 is assembled to the staple cartridge support 1130. In certain embodiments, the crowns 1125 of the staples 1120 may be aligned with the slots 1134 when the staple cartridge 1100 is assembled to the staple cartridge support 1130. In at least one such embodiment, the crowns 1125 may not enter into the slots 1134 until a compressive force is applied to the staple legs 1121 and the bases and/or crowns of the staples 1120 are pushed downwardly into the slots 1134.

In various embodiments, referring now to FIGS. 88 and 89, a staple cartridge, such as staple cartridge 1200, for example, can comprise a compressible, implantable cartridge body 1210 comprising an outer layer 1211 and an inner layer 1212. Similar to the above, the staple cartridge 1200 can comprise a plurality of staples 1220 positioned within the cartridge body 1210. In various embodiments, each staple 1220 can comprise a base 1222 and one or more staple legs 1221 extending therefrom. In at least one such embodiment, the staple legs 1221 can be inserted into the inner layer 1212 and seated to a depth in which the bases 1222 of the staples 1220 abut and/or are positioned adjacent to the bottom surface 1218 of the inner layer 1212, for example. In the embodiment depicted in FIGS. 88 and 89, the inner layer 1212 does not comprise staple cavities configured to receive a portion of the staples 1220 while, in other embodiments, the inner layer 1212 can comprise such staple cavities. In various embodiments, further to the above, the inner layer 1212 can be comprised of a compressible material, such as bioabsorbable foam and/or oxidized regenerated cellulose (ORC), for example, which can be configured to allow the cartridge body 1210 to collapse when a compressive load is applied thereto. In various embodiments, the inner layer 1212 can be comprised of a lyophilized foam comprising polylactic acid (PLA) and/or polyglycolic acid (PGA), for example. The ORC may be commercially available under the trade name Surgicel and can comprise a loose woven fabric (like a surgical sponge), loose fibers (like a cotton ball), and/or a foam. In at least one embodiment, the inner layer 1212 can be comprised of a material including medicaments, such as freeze-dried thrombin and/or fibrin, for example, contained therein and/or coated thereon which can be water-activated and/or activated by fluids within the patient's body, for example. In at least one such embodiment, the freeze-dried thrombin and/or fibrin can be held on a Vicryl (PGA) matrix, for example. In certain circumstances, however, the activatable medicaments can be unintentionally activated when the staple cartridge 1200 is inserted into a surgical site within the patient, for example. In various embodiments, referring again to FIGS. 88 and 89, the outer layer 1211 can be comprised of a water impermeable, or at least substantially water impermeable, material such that liquids do not come into contact with, or at least substantially contact, the inner layer 1212 until after the cartridge body 1210 has been compressed and the staple legs have penetrated the outer layer 1211 and/or after the outer layer 1211 has been incised in some fashion. In various embodiments, the outer layer 1211 can be comprised of a buttress material and/or plastic material, such as polydioxanone (PDS) and/or polyglycolic acid (PGA), for example. In certain embodiments, the outer layer 1211 can comprise a wrap which surrounds the inner layer 1212 and the staples 1220. More particularly, in at least one embodiment, the staples 1220 can be inserted into the inner layer 1212 and the outer layer 1211 can be wrapped around the sub-assembly comprising the inner layer 1212 and the staples 1220 and then sealed.

In various embodiments, referring now to FIGS. 90 and 91, a staple cartridge, such as staple cartridge 1300, for example, can comprise a compressible, implantable cartridge body 1310 including an outer layer 1311 and an inner layer 1312. Similar to the above, the staple cartridge 1300 can further comprise staples 1320 positioned within the cartridge body 1310 wherein each staple 1320 can comprise a base 1322 and one or more legs 1321 extending therefrom. Similar to staple cartridge 1200, the bases 1322 of staples 1320 can extend below the bottom surface 1318 of the inner layer 1312 and the outer layer 1311 can surround the bases 1322. In at least one such embodiment, the outer layer 1311 can be sufficiently flexible so as to envelop each staple base 1322 such that the outer layer 1311 conforms to the contour of the bases 1322. In at least one alternative embodiment, referring again to FIG. 89, the outer layer 1211 can be sufficiently rigid such that it extends around the bases 1222 without conforming to each base 1222. In any event, in various embodiments, the outer layer 1311 can be positioned intermediate the bases 1322 of staples 1320 and a staple cartridge support surface, such as support surfaces 1031 or 1131, for example, supporting the staple cartridge 1300. In at least one such embodiment, the outer layer 1311 can be positioned intermediate the bases 1322 and support slots, such as slots 1032 or 1132, for example, defined in the staple cartridge support surface. In at least one such embodiment, further to the above, the outer layer 1311 can be configured to limit the movement of the bases 1322 and/or increase the coefficient of friction between the bases 1322 and the staple cartridge support surface and/or support slots in order to reduce relative movement therebetween. In various alternative embodiments, referring now to FIGS. 92 and 93, the outer layer of a staple cartridge, such as staple cartridge 1400, for example, may not entirely surround the staples positioned therein. In at least one such embodiment, an outer layer 1411 of a compressible, implantable cartridge body 1410 may be assembled to the inner layer 1412 before the staple legs 1421 of staples 1420 are inserted into the cartridge body 1410. As a result of the above, the bases 1422 of staples 1420 may extend outside of the outer layer 1411 and, in at least one such embodiment, the bases 1422 may be positioned directly into the support slots 1032 or 1132 within the staple cartridge support surfaces 1031 or 1131, for example. In various embodiments, the staple legs 1421 may incise the outer layer 1411 when they are inserted therethrough. In various circumstances, the holes created by the staple legs 1421 may closely surround the staple legs 1421 such that very little, if any, fluid can leak between the staple legs 1421 and the outer layer 1411 which can reduce the possibility of, or prevent, the medicament contained within the staple cartridge body 1410 from being activated and/or leaking out of the cartridge body 1410 prematurely.

As discussed above, referring again to FIGS. 88 and 89, the legs 1221 of the staples 1220 can be embedded within the cartridge body 1210 and the bases 1222 of staples 1220 may extend outwardly from the bottom surface 1218 of the inner layer 1212. In various embodiments, further to the above, the inner layer 1212 may not comprise staple cavities configured to receive the staples 1220. In various other embodiments, referring now to FIGS. 94 and 95, a staple cartridge, such as staple cartridge 1500, for example, may comprise a compressible, implantable cartridge body 1510 comprising staple cavities 1515 which can be configured to receive at least a portion of the staples 1520 therein. In at least one such embodiment, a top portion of the staple legs

1521 of the staples 1520 may be embedded in the inner layer 1512 while a bottom portion of the staple legs 1521, and the bases 1522, may be positioned within the staple cavities 1515. In certain embodiments, the bases 1522 may be entirely positioned in the staple cavities 1515 while, in some embodiments, the bases 1522 may at least partially extend below the bottom surface 1518 of the inner layer 1512. Similar to the above, the outer layer 1511 may enclose the inner layer 1512 and the staples 1520 positioned therein. In certain other embodiments, referring now to FIG. 96, a staple cartridge 1600 may comprise staples 1620 positioned within staple cavities 1615 in a compressible, implantable cartridge body 1610 wherein at least a portion of the staples 1620 are not enclosed by the outer layer 1611. In at least one such embodiment, each staple 1620 can comprise staple legs 1621 which are at least partially embedded in the inner layer 1612 and, in addition, bases 1622 which extend outwardly around the outer layer 1611.

In various embodiments, referring now to FIGS. 97 and 98, a staple cartridge, such as staple cartridge 1700, for example, can comprise a compressible, implantable cartridge body 1710 and a plurality of staples 1720 at least partially positioned within the cartridge body 1710. The cartridge body 1710 can comprise an outer layer 1711, an inner layer 1712, and, in addition, an alignment matrix 1740 which can be configured to align and/or retain the staples 1720 in position within the cartridge body 1710. In at least one embodiment, the inner layer 1712 can comprise a recess 1741 which can be configured to receive the alignment matrix 1740 therein. In various embodiments, the alignment matrix 1140 can be press-fit within the recess 1741 and/or otherwise suitably secured to the inner layer 1712 utilizing at least one adhesive, such as fibrin and/or protein hydrogel, for example. In at least one embodiment, the recess 1741 can be configured such that the bottom surface 1742 of alignment matrix 1740 is aligned, or at least substantially aligned, with the bottom surface 1718 of the inner layer 1712. In certain embodiments, the bottom surface 1742 of the alignment matrix can be recessed with respect to and/or extend from the bottom surface 1718 of the second layer 1712. In various embodiments, each staple 1720 can comprise a base 1722 and one or more legs 1721 extending from the base 1722, wherein at least a portion of the staple legs 1721 can extend through the alignment matrix 1740. The alignment matrix 1740 can further comprise a plurality of apertures and/or slots, for example, extending therethrough which can be configured to receive the staple legs 1721 therein. In at least one such embodiment, each aperture can be configured to closely receive a staple leg 1721 such that there is little, if any, relative movement between the staple leg 1721 and the sidewalls of the aperture. In certain embodiments, the alignment matrix apertures may not extend entirely through the alignment matrix 1740 and the staple legs 1721 may be required to incise the alignment matrix 1740 as the staple legs 1721 are pushed therethrough.

In various embodiments, the alignment matrix 1740 can be comprised of a molded plastic body which, in at least one embodiment, can be stiffer or less compressible than the inner layer 1712 and/or the outer layer 1711. In at least one such embodiment, the alignment matrix 1740 can be comprised of a plastic material and/or any other suitable material, such as polydioxanone (PDS) and/or polyglycolic acid (PGA), for example. In certain embodiments, the alignment matrix 1740 can be assembled to the inner layer 1712 and the staple legs 1721 can thereafter be inserted through the alignment matrix 1740 and embedded into the inner layer 1712. In various embodiments, the bottom surface 1742 of the alignment matrix 1740 can comprise one or more grooves, slots, or troughs, for example, which can be configured to at least partially receive the bases 1722 of the staples 1720. Similar to the above, the outer layer 1711 can then be placed around the subassembly comprising the inner layer 1712, the alignment matrix 1740, and the staples 1720. Alternatively, the outer layer 1711 can be placed around a subassembly comprising the inner layer 1712 and the alignment matrix 1740 wherein the staples 1720 can be thereafter inserted through the outer layer 1711, the alignment matrix 1740, and the inner layer 1712. In any event, as a result of the above, the inner layer 1712, the alignment matrix 1740, and/or the outer layer 1711 can be configured to retain the staples 1720 in position until and/or after they are deformed by an anvil as described above. In at least one such embodiment, the alignment matrix 1740 can serve to hold the staples 1720 in place before the staple cartridge 1700 is implanted within a patient and, in addition, secure the tissue along the staple line after the staple cartridge 1700 has been implanted. In at least one embodiment, the staples 1720 may be secured within the alignment matrix 1740 without being embedded in the inner layer 1712 and/or the outer layer 1711, for example.

In various embodiments, referring now to FIGS. 99-105, a staple cartridge, such as staple cartridge 1800, for example, can be assembled by compressing an inner layer 1812, inserting staples, such as staples 1820, for example, into the inner layer 1812, and wrapping the inner layer 1812 with an outer layer 1811. Referring primarily to FIG. 99, a compressible inner layer 1812 is illustrated as comprising a plurality of staple cavities 1815 defined therein, although other embodiments are envisioned in which the inner layer 1812 does not comprise staple cavities, as described above. Referring now to FIG. 100, the compressible inner layer 1812 can be positioned intermediate a transfer plate 1850 and a support plate 1860 and compressed between the compression surfaces 1852 and 1862 thereof, respectively. As illustrated in FIG. 100, the top and bottom surfaces of the inner layer 1812 can be compressed toward one another and, in response thereto, the inner layer 1812 can bulge outwardly in the lateral directions. In certain embodiments, the inner layer 1812 can be compressed to a height which is approximately one-third of its original height, for example, and can have a height or thickness between approximately 0.06" and approximately 0.08" in its compressed state, for example. As also illustrated in FIG. 100, the transfer plate 1850 can further comprise a plurality of staples, such as staples 1820, for example, positioned within a plurality of staple wells 1853. In addition, the transfer plate 1850 can further comprise a plurality of drivers 1851 which can be configured to push the staples 1820 upwardly and out of the staple wells 1853. Referring now to FIG. 101, the drivers 1851 can be utilized to push the staple legs 1821 of the staples 1820 into and through the compressed inner layer 1812. In various embodiments, the drivers 1851 can be configured such that the top surfaces thereof are positioned flush, or at least nearly flush, with the compression surface 1852 of the transfer plate 1850 when the staples 1820 have been fully deployed from the staple wells 1853 of transfer plate 1850. In certain embodiments, as also illustrated in FIG. 101, the support plate 1860 can comprise a plurality of receiving apertures 1861 which can be configured to receive the staple legs 1821, or at least the tips of the staple legs 1821, after they are pushed through the inner layer 1812. The receiving apertures 1861, or the like, may be necessitated in embodiments where the inner layer 1812 has been compressed to a height which is shorter than the height of

the staples **1820** and, thus, when the staples **1820** have been fully ejected from the staple wells **1853**, the staple legs **1821** may protrude from the top surface of the compressed inner layer **1812**. In certain other embodiments, the inner layer **1812** may be compressed to a height which is taller than the height of the staples **1820** and, as a result, the receiving apertures **1861** in support plate **1860** may be unnecessary.

After the staples **1820** have been inserted into the inner layer **1812**, referring now to FIG. **102**, the support plate **1860** can be moved away from the transfer plate **1850** in order to allow the inner layer **1812** to decompress. In such circumstances, the inner layer **1812** can resiliently re-expand to its original, or at least near-original, uncompressed height. As the inner layer **1812** re-expands, the height of the inner layer **1812** can increase such that it exceeds the height of the staples **1820** and such that the staple legs **1821** of the staples **1820** no longer protrude from the top surface of the inner layer **1812**. In various circumstances, the receiving apertures **1861** can be configured to hold the staple legs **1821** in position at least until the support plate **1860** has been sufficiently moved away such that the legs **1821** are no longer positioned within the receiving apertures **1861**. In such circumstances, the receiving apertures **1861** can assist in maintaining the relative alignment of the staples **1820** within the inner layer **1812** as it re-expands. In various circumstances, the inner layer **1812** and the staples **1820** positioned therein can comprise a subassembly **1801** which, referring now to FIG. **103**, can be inserted into an outer layer **1811**, for example. In at least one such embodiment, the outer layer **1811** can comprise a cavity **1802** defined therein which can be configured to receive the subassembly **1801** therein. In various circumstances, a tool, such as pliers **1855**, for example, can be utilized to pull the outer layer **1811** onto the subassembly **1801**. Once the subassembly **1801** has been sufficiently positioned within the outer layer **1811**, referring now to FIG. **104**, the outer layer **1811** can be sealed. In various embodiments, the outer layer **1811** can be sealed utilizing the application of heat energy to a portion thereof. More particularly, in at least one embodiment, the outer layer **1811** can be comprised of a plastic material wherein the open end of the outer layer **1811** can be heat-staked by one or more heated elements, or irons, **1856** in order to bond and/or seal the perimeter of the open end of the outer layer **1811** together. In at least one such embodiment, referring now to FIG. **105**, an excess portion **1857** of the outer layer **1811** can be removed and the staple cartridge **1800** can then be used as described herein.

As described above, a staple cartridge can be positioned within and/or secured to a staple cartridge attachment portion. In various embodiments, referring now to FIGS. **106** and **107**, a staple cartridge attachment portion can comprise a staple cartridge channel, such as staple cartridge channel **1930**, for example, which can be configured to receive at least a portion of a staple cartridge, such as staple cartridge **1900**, for example, therein. In at least one embodiment, the staple cartridge channel **1930** can comprise a bottom support surface **1931**, a first lateral support wall **1940**, and a second lateral support wall **1941**. In use, the staple cartridge **1900** can be positioned within the staple cartridge channel **1930** such that the staple cartridge **1900** is positioned against and/or adjacent to the bottom support surface **1931** and positioned intermediate the first lateral support wall **1940** and the second lateral support wall **1941**. In certain embodiments, the first lateral support wall **1940** and the second lateral support wall **1941** can define a lateral gap therebetween. In at least one such embodiment, the staple cartridge **1900** can comprise a lateral width **1903** which is the same as and/or wider than the lateral gap defined between the support walls **1940** and **1941** such that a compressible, implantable cartridge body **1910** of the staple cartridge **1900** can fit securely between the walls **1940** and **1941**. In certain other embodiments, the lateral width **1903** of the staple cartridge **1900** can be shorter than the gap defined between the first and second side walls **1940** and **1941**. In various embodiments, at least a portion of the walls **1940** and **1941** and the bottom support surface **1931** can be defined by a stamped metal channel while, in at least one embodiment, at least a portion of the lateral support wall **1940** and/or lateral support wall **1941** can be comprised of a flexible material, such as an elastomeric material, for example. Referring primarily to FIG. **106**, the first side wall **1940** and the second side wall **1941** of the staple cartridge channel **1930** can each be comprised of a rigid portion **1933** extending upwardly from the bottom support surface **1931** and a flexible portion **1934** extending upwardly from the rigid portions **1933**.

In various embodiments, further to the above, the cartridge body **1910** of staple cartridge **1900** can be comprised of one or more compressible layers, such as first layer **1911** and second layer **1912**, for example. When the cartridge body **1910** is compressed against the bottom support surface **1931** by an anvil, as described above, the side portions of the cartridge body **1910** can expand laterally. In embodiments where the staple cartridge **1930** is comprised of rigid side walls, the lateral expansion of the cartridge body **1910** can be prevented, or at least limited, by the rigid side walls and, as a result, a significant amount of internal pressure, or stress, can be developed within the cartridge body **1910**. In embodiments where at least a portion of the staple cartridge **1930** is comprised of flexible side walls, the flexible side walls can be configured to flex laterally and permit the side portions of the cartridge body **1910** to expand laterally, thereby reducing the internal pressure, or stress, generated within the cartridge body **1910**. In embodiments where the cartridge channel does not comprise lateral side walls, or comprises lateral sidewalls which are relatively shorter than the staple cartridge, the side portions of the staple cartridge may expand laterally uninhibited, or at least substantially uninhibited. In any event, referring now to FIG. **107**, a staple cartridge channel **2030** can comprise lateral sidewalls **2040** and **2041** which can be entirely comprised of a flexible material, such as an elastomeric material, for example. The staple cartridge channel **2030** can further comprise lateral slots **2033** extending along the sides of the bottom support surface **2031** of the staple cartridge channel **2030** which can be configured to receive and secure at least a portion of the lateral sidewalls **2040** and **2041** therein. In certain embodiments, the lateral side walls **2040** and **2041** can be secured in the slots **2033** via a snap-fit and/or press-fit arrangement while, in at least some embodiments, the lateral side walls **2040** and **2041** can be secured in the slots **2033** by one or more adhesives. In at least one embodiment, the sidewalls **2040** and **2041** may be detachable from the bottom support surface **2031** during use. In any event, a compressible, implantable cartridge body **2010** can be detached and/or disengaged from the lateral side walls **2040** and **2041** when the cartridge body **2010** is implanted with the staples **2020**.

In various embodiments, referring now to FIG. **108**, a surgical instrument can comprise a shaft **2150** and an end effector extending from the distal end of the shaft **2150**. The end effector can comprise, similar to the above, a staple cartridge channel **2130**, an anvil **2140** movable between an open position and a closed position, and a staple cartridge **2100** positioned intermediate the staple cartridge channel **2130** and the anvil **2140**. Also similar to the above, the staple

cartridge **2100** can comprise a compressible, implantable cartridge body **2110** and a plurality of staples **2120** positioned in the cartridge body **2110**. In various embodiments, the staple cartridge channel **2130** can comprise, one, a bottom support surface **2131** against which the staple cartridge **2100** can be positioned, two, a distal end **2135** and, three, a proximal end **2136**. In at least one embodiment, as illustrated in FIG. **108**, the staple cartridge **2100** can comprise a first end **2105** which can be positionable in the distal end **2135** of the staple cartridge channel **2130** and a second end **2106** which can be positionable in the proximal end **2136** of the staple cartridge channel **2130**. In various embodiments, the distal end **2135** of the staple cartridge channel **2130** can comprise at least one distal retention feature, such as a retention wall **2137**, for example, and, similarly, the proximal end **2136** can comprise at least one proximal retention feature, such as a retention wall **2138**, for example. In at least one such embodiment, the distal retention wall **2137** and the proximal retention wall **2138** can define a gap therebetween which can be equal to or less than the length of the staple cartridge **2100** such that the staple cartridge **2100** can fit securely within the staple cartridge channel **2130** when the staple cartridge **2100** is inserted therein.

In various embodiments, referring again to FIGS. **88** and **89**, a staple cartridge, such as staple cartridge **1200**, for example, can comprise a flat, or at least substantially flat, tissue-contacting surface **1219**. In at least one such embodiment, the staple cartridge body **1210** of staple cartridge **1200** can comprise a first end **1205** which can be defined by a first height, or thickness, **1207** and a second end **1206** which can be defined by a second height, or thickness, **1208**, wherein the first height **1207** can be equal to, or at least substantially equal to, the second height **1208**. In certain embodiments, the cartridge body **1210** can comprise a constant, or at least substantially constant, height, or thickness, between the first end **1205** and the second end **1206**. In at least one such embodiment, the tissue-contacting surface **1219** can be parallel, or at least substantially parallel, to the bottom surface **1218** of the cartridge body **1210**. In various embodiments, referring once again to FIG. **108**, the first end **2105** of the cartridge body **2110** of staple cartridge **2100** can be defined by a first height **2107** which is different than a second height **2108** of the second end **2106**. In the illustrated embodiment, the first height **2107** is larger than the second height **2108**, although the second height **2108** could be larger than the first height **2107** in alternative embodiments. In various embodiments, the height of the cartridge body **2110** can decrease linearly and/or geometrically between the first end **2105** and the second end **2106**. In at least one such embodiment, the tissue-contacting surface **2119**, which extends between the first end **2105** and the second end **2106**, can be oriented along an angle defined therebetween. In at least one such embodiment, the tissue-contacting surface **2119** may not be parallel to the bottom surface **2118** of the cartridge body **2110** and/or parallel to the support surface **2131** of the staple cartridge channel **2130**.

In various embodiments, referring again to FIGS. **108** and **109**, the anvil **2140** can comprise a tissue-contacting surface **2141** which can be parallel, or at least substantially parallel, to the support surface **2131** of the staple cartridge channel **2130** when the anvil **2140** is in a closed position, as illustrated in FIG. **109**. When the anvil **2140** is in a closed position, the anvil **2140** can be configured to compress the first end **2105** of the staple cartridge **2100** more than the second end **2106** owing to the taller height of the first end **2105** and the shorter height of the second end **2106**. In some circumstances, including circumstances where the tissue T positioned intermediate the tissue contacting surfaces **2119** and **2141** has a constant, or at least substantially constant, thickness, the pressure generated within the tissue T and the cartridge **2100** can be greater at the distal end of the end effector than the proximal end of the end effector. More particularly, when the tissue T between the anvil **2140** and the staple cartridge **2100** has a substantially constant thickness, the tissue T positioned intermediate the distal end **2145** of the anvil **2140** and the first end **2105** of the staple cartridge **2100** can be more compressed than the tissue T positioned intermediate the proximal end **2146** of the anvil **2140** and the second end **2106** of the staple cartridge **2100**. In various embodiments, a pressure gradient can be generated within the tissue T between the proximal end and the distal end of the end effector. More particularly, in at least one embodiment, when the tissue T between the anvil **2140** and the staple cartridge **2100** has a substantially constant thickness and the height of the staple cartridge **2100** decreases linearly from the distal end to the proximal end of the end effector, the pressure within the tissue T can decrease linearly from the distal end of the end effector to the proximal end of the end effector. Similarly, in at least one embodiment, when the tissue T between the anvil **2140** and the staple cartridge **2100** has a substantially constant thickness and the height of the staple cartridge **2100** decreases geometrically from the distal end to the proximal end of the end effector, the pressure within the tissue T can decrease geometrically from the distal end of the end effector to the proximal end of the end effector.

In various embodiments, referring again to FIG. **108**, the tissue T positioned intermediate the staple cartridge **2100** and the anvil **2140** may not have a constant thickness throughout. In at least one such circumstance, the tissue T positioned between the proximal end **2146** of the anvil **2140** and the second end **2106** of the staple cartridge **2100** may be thicker than the tissue T positioned between the distal end **2145** of the anvil **2140** and the first end **2105** of the staple cartridge **2100**. In such circumstances, as a result, the thicker tissue T may be generally positioned above the shorter proximal end **2106** of the staple cartridge **2100** and the thinner tissue T may be generally positioned above the taller distal end **2105**. In use, the firing collar **2152** of the shaft **2150** can be advanced distally along the shaft spine **2151** such that the firing collar **2152** engages the cam portion **2143** of the anvil **2140** and rotates the anvil **2140** toward the staple cartridge **2100** as illustrated in FIG. **109**. Once the anvil **2140** has been rotated into a fully-closed position, the tissue T may be compressed between the tissue-contacting surfaces **2119** and **2141** and, even though the height of the staple cartridge **2100** may not be constant between the proximal and distal ends of the end effector, the pressure or compressive forces applied to the tissue T may be constant, or at least substantially constant, thereacross. More particularly, as the thinner tissue T may be associated with the taller height of the staple cartridge **2100** and the thicker tissue T may be associated with the shorter height of the staple cartridge **2100**, the cumulative, or summed, height of the tissue T and the staple cartridge **2100** may be constant, or at least substantially constant, between the proximal and distal ends of the end effector and, as a result, the compression of this cumulative height by the anvil **2140** may be constant, or at least substantially constant, thereacross.

In various embodiments, referring again to FIGS. **108** and **109**, the staple cartridge **2100** can comprise an asymmetrical configuration. In at least one such embodiment, for example, the height of the staple cartridge **2100** at the first end **2105**

thereof may be higher than the height of the staple cartridge **2100** at the second end **2106** thereof. In certain embodiments, the staple cartridge **2100** and/or the staple cartridge channel **2130** can comprise one or more alignment and/or retention features which can be configured to assure that the staple cartridge **2100** can only be positioned within the staple cartridge channel **2130** in one orientation, i.e., an orientation in which the first end **2105** is positioned in the distal end **2135** of the staple cartridge channel **2130** and the second end **2106** is positioned in the proximal end **2136**. In various alternative embodiments, the staple cartridge **2100** and/or the staple cartridge channel **2130** can comprise one or more alignment and/or retention features which can be configured to permit the staple cartridge **2100** to be positioned within the staple cartridge channel **2130** in more than one orientation. Referring now to FIG. **110**, for example, the staple cartridge **2100** can be positioned within the staple cartridge channel **2130** such that the first end **2105** of the staple cartridge **2100** can be positioned in the proximal end **2136** of the staple cartridge channel **2130** and the second end **2106** can be positioned in the distal end **2135**. In various embodiments, as a result, the shorter height of the staple cartridge **2100** can be positioned proximate the distal retention wall **2137** and the taller height of the staple cartridge **2100** can be positioned proximate to the proximal retention wall **2138**. In at least one such embodiment, the staple cartridge **2100** can be suitably arranged to apply a constant, or at least substantially constant, clamping pressure to tissue T having a thicker portion within the distal end of the end effector and a thinner portion within the proximal end of the end effector. In various embodiments, the staple cartridge **2100**, for example, can be selectively oriented within the staple cartridge channel **2130**. In at least one such embodiment, the alignment and/or retention features of the staple cartridge **2100** can be symmetrical and a surgeon can selectively orient the staple cartridge **2100** within the staple cartridge channel **2130** in the orientations depicted in FIG. **108** and FIG. **110**, for example.

Further to the above, the implantable cartridge body **2110** can comprise a longitudinal axis **2109** which, when the staple cartridge **2100** is positioned in the staple cartridge channel **2130**, can extend between the proximal and distal ends of the end effector. In various embodiments, the thickness of the cartridge body **2110** can generally decrease and/or generally increase between the first end **2105** and the second end **2106** along the longitudinal axis **2109**. In at least one such embodiment, the distance, or height, between the bottom surface **2118** and the tissue-contacting surface **2119** can generally decrease and/or generally increase between the first end **2105** and the second end **2106**. In certain embodiments, the thickness of the cartridge body **2110** can both increase and decrease along the longitudinal axis **2109**. In at least one such embodiment, the thickness of the cartridge body **2110** can comprise one or more portions which increase in thickness and one or more portions which can decrease in thickness. In various embodiments, referring again to FIG. **110**, the staple cartridge **2100** can comprise a plurality of staples **2120** positioned therein. In use, as described above, the staples **2120** can be deformed when the anvil **2140** is moved into a closed position. In certain embodiments, each staple **2120** can have the same, or at least substantially the same, height. In at least one such embodiment, the height of a staple can be measured from the bottom of the base of the staple to the top, or tip, of the tallest leg of the staple, for example.

In various embodiments, the staples within a staple cartridge can have different staple heights. In at least one such embodiment, a staple cartridge can comprise a first group of staples having a first staple height which are positioned in a first portion of a compressible cartridge body and a second group of staples having a second staple height which are positioned in a second portion of the compressible cartridge body. In at least one embodiment, the first staple height can be taller than the second staple height and the first group of staples can be positioned in the first end **2105** of the staple cartridge **2100** while the second group of staples can be positioned in the second end **2106**. Alternatively, the taller first group of staples can be positioned in the second end **2106** of the staple cartridge **2100** while the shorter second group of staples can be positioned in the first end **2105**. In certain embodiments, a plurality of staple groups, each group having a different staple height, can be utilized. In at least one such embodiment, a third group having an intermediate staple height can be positioned in the cartridge body **2110** intermediate the first group of staples and the second group of staples. In various embodiments, each staple within a staple row in the staple cartridge can comprise a different staple height. In at least one embodiment, the tallest staple within a staple row can be positioned on a first end of a staple row and the shortest staple can be positioned on an opposite end of the staple row. In at least one such embodiment, the staples positioned intermediate the tallest staple and the shortest staple can be arranged such that the staple heights descend between the tallest staple and the shortest staple, for example.

In various embodiments, referring now to FIG. **111**, an end effector of a surgical stapler can comprise an anvil **2240**, a staple cartridge channel **2230**, and a staple cartridge **2200** supported by the staple cartridge channel **2230**. The staple cartridge **2200** can comprise a compressible, implantable cartridge body **2210** and a plurality of staples, such as staples **2220***a* and staples **2220***b*, for example, positioned therein. In various embodiments, the staple cartridge channel **2230** can comprise a cartridge support surface **2231** and a plurality of staple support slots, such as support slots **2232***a* and **2232***b*, for example, defined therein. In at least one such embodiment, the staple cartridge **2200** can comprise two outer rows of staples **2220***a* and two inner rows of staples **2220***b*, wherein the support slots **2232***a* can be configured to support the staples **2220***a* and the support slots **2232***b* can be configured to support the staples **2220***b*. Referring to FIGS. **111** and **112**, the anvil **2240** can comprise a plurality of staple forming pockets **2242** defined therein which can be configured to receive and deform the staples **2220***a* and **2220***b* when the anvil **2240** is moved toward the staple cartridge **2200**. In at least one such embodiment, the bottom surfaces of the support slots **2232***a* can be a first distance **2201***a* away from the top surfaces of the staple forming pockets **2242** while the bottom surfaces of the support slots **2232***b* can be a second distance **2201***b* away from the top surfaces of the staple forming pockets **2242**. In at least one such embodiment, the support slots **2232***b* are positioned closer to the anvil **2240** owing to the raised step in the support surface **2231** in which they are defined. Owing to the different distances **2201***a* and **2201***b*, in various embodiments, the outer rows of staples **2220***a* and the inner rows of staples **2220***b* can be deformed to different formed heights. In various circumstances, staples deformed to different formed heights can apply different clamping pressures or forces to the tissue T being stapled. In addition to the above, the staples can begin with different unformed staple heights. In at least one such embodiment, referring again to FIG. **111**, the outer staples **2220***a* can have an initial, unformed height which is greater than the initial, unformed

height of the inner staples **2220***b*. As illustrated in FIGS. **111** and **112**, the inner staples **2220***b*, which have a shorter unformed height than the outer staples **2220***a*, can also have a shorter formed height than the outer staples **2220***b*. In various alternative embodiments, the inner staples **2220***b* may have a taller unformed height than the outer staples **2220***a* yet have a shorter deformed staple height than the outer staples **2220***a*.

In various embodiments, further to the above, the anvil **2240** can be moved into a closed position, as illustrated in FIG. **112**, in order to compress the cartridge body **2210** and deform the staples **2220***a* and **2220***b*. In certain embodiments, a surgical stapler comprising the end effector depicted in FIGS. **111** and **112**, for example, can further comprise a cutting member which can be configured to transect the tissue T positioned intermediate the anvil **2240** and the staple cartridge **2200**. In at least one such embodiment, the anvil **2240**, the staple cartridge channel **2230** and/or the staple cartridge **2200** can define a slot configured to slidably receive a cutting member therein. More particularly, the anvil **2240** can comprise a slot portion **2249**, the staple cartridge channel **2230** can comprise a slot portion **2239**, and the staple cartridge **2200** can comprise a slot portion **2203** which can be aligned, or at least substantially aligned, with one another when the anvil **2240** is in a closed, or at least substantially closed, position. In various embodiments, the cutting member can be moved from the proximal end of the end effector toward the distal end of the end effector after the anvil **2240** has been closed and the staples **2220***a*, **2220***b* have been deformed. In at least one embodiment, the cutting member can be moved independently of the staple deformation process. In certain embodiments, the cutting member can be advanced at the same time that the staples are being deformed. In any event, in at least one embodiment, the cutting member can be configured to incise the tissue along a path positioned intermediate the inner rows of staples **2220***b*.

In various embodiments, as illustrated in FIG. **112**, the inner staples **2220***b* can be formed to a shorter height than the outer staples **2220***a* wherein the inner staples **2220***b* can apply a larger clamping pressure or force to the tissue adjacent to the cut line created by the cutting member. In at least one such embodiment, the larger clamping pressure or force created by the inner staples **2220***b* can provide various therapeutic benefits such as reducing bleeding from the incised tissue T while the smaller clamping pressure created by the outer staples **2220***a* can provide flexibility within the stapled tissue. In various embodiments, referring again to FIGS. **111** and **112**, the anvil **2240** can further comprise at least one piece of buttress material, such as buttress material **2260**, for example, attached thereto. In at least one such embodiment, the legs of the staples **2220***a*, **2220***b* can be configured to incise the buttress material **2260** and/or pass through apertures in the buttress material **2260** when the staple cartridge **2200** is compressed by the anvil **2240** and thereafter contact the staple forming pockets **2242** in the anvil **2240**. As the legs of the staples **2220***a*, **2220***b* are being deformed, the legs can contact and/or incise the buttress material **2260** once again. In various embodiments, the buttress material **2260** can improve the hemostasis of and/or provide strength to the tissue being stapled.

In various embodiments, referring again to FIGS. **111** and **112**, the bottom surface of the cartridge body **2210** can comprise a stepped contour which matches, or at least substantially matches, the stepped contour of the cartridge support surface **2231**. In certain embodiments, the bottom surface of the cartridge body **2210** can deform to match, or at least substantially match, the contour of the cartridge support surface **2231**. In various embodiments, referring now to FIG. **113**, an end effector, similar to the end effector depicted in FIG. **111**, for example, can comprise a staple cartridge **2300** positioned therein. The staple cartridge **2300** can comprise a compressible, implantable body **2310** comprising an inner layer **2312** and an outer layer **2311** wherein, further to the above, the outer layer **2311** can be comprised of a water impermeable material in at least one embodiment. In various embodiments, the outer layer **2311** can extend around the staples **2220***a*, **2220***b* and can be positioned intermediate the staples **2220***a*, **2220***b* and the support slots **2232***a*, **2232***b*, respectively. In various embodiments, referring now to FIG. **114**, an end effector, similar to the end effector depicted in FIG. **111**, for example, can comprise a staple cartridge **2400** positioned therein. Similar to the staple cartridge **2300**, the compressible, implantable cartridge body **2410** of staple cartridge **2400** can comprise an inner layer **2412** and an outer layer **2411**; however; in at least one embodiment, the cartridge body **2410** may not comprise a cutting member slot therein. In at least one such embodiment, the cutting member may be required to incise the inner layer **2412** and/or the outer layer **2411**, for example, as it is advanced through the staple cartridge.

In various embodiments, referring now to FIG. **115**, an end effector of a surgical stapler can comprise an anvil **2540**, a staple cartridge channel **2530**, and a staple cartridge **2500** positioned in the staple cartridge channel **2530**. Similar to the above, the staple cartridge **2500** can comprise a compressible, implantable cartridge body **2510**, outer rows of staples **2220***a*, and inner rows of staples **2220***b*. The staple cartridge channel **2530** can comprise a flat, or an at least substantially flat, cartridge support surface **2531** and staple support slots **2532** defined therein. The anvil **2540** can comprise a stepped surface **2541** and a plurality of staple forming pockets, such as forming pockets **2542***a* and **2542***b*, for example, defined therein. Similar to the above, the forming pockets **2542***a* and the support slots **2532** can define a distance therebetween which is greater than the distance between the forming pockets **2452***b* and the support slots **2532**. In various embodiments, the anvil **2540** can further comprise a piece of buttress material **2560** attached to the stepped surface **2541** of the anvil **2540**. In at least one such embodiment, the buttress material **2560** can conform, or at least substantially conform, to the stepped surface **2541**. In various embodiments, the buttress material **2560** can be removably attached to the surface **2541** by at least one adhesive, such as fibrin and/or protein hydrogel, for example. In certain embodiments, the cartridge body **2510** can also comprise a stepped profile which, in at least one embodiment, parallels, or at least substantially parallels, the stepped surface **2541** of the anvil **2540**. More particularly, in at least one embodiment, the anvil **2540** can comprise steps **2548** extending toward the staple cartridge **2500** wherein the steps **2548** can comprise a step height which equals, or at least substantially equals, the step height of the steps **2508** extending from the cartridge body **2510**. In at least one such embodiment, as a result of the above, the amount of the compressible cartridge body **2510** that can be captured in the first staples **2220***a* can be different than the amount of the compressible cartridge body **2510** that can be captured in the second staples **2220***b*, for example.

In various embodiments, referring now to FIG. **116**, an end effector can comprise an anvil **2640**, a staple cartridge channel **2530**, and a staple cartridge **2600** positioned therebetween. The staple cartridge **2600** can comprise a compressible, implantable cartridge body **2610** including an

inner layer **2612**, an outer layer **2611**, and a plurality of staples, such as staples **2220***a* and **2200***b*, for example, positioned therein. In various embodiments, the anvil **2640** can comprise a plurality of staple forming pockets **2642** in surface **2641** and the staple cartridge channel **2530** can comprise a plurality of staple forming slots **2532** defined in the support surface **2531**. As illustrated in FIG. **116**, the anvil surface **2641** can be parallel, or at least substantially parallel, to the cartridge support surface **2531** wherein each forming pocket **2642** can be positioned an equal, or at least substantially equal, distance away from an opposing and corresponding staple support slot **2532**. In various embodiments, the staple cartridge **2600** can comprise staples having the same, or at least substantially the same, initial, unformed staple height and, in addition, the same, or at least substantially the same, formed staple height. In certain other embodiments, the outer rows of staples can comprise staples **2220***a* and the inner rows of staples can comprise staples **2220***b* wherein, as discussed above, the staples **2220***a* and **2220***b* can have different unformed staple heights. When the anvil **2640** is moved toward the staple cartridge **2600** into a closed position, the staples **2220***a* and **2220***b* can be formed such that they have the same, or at least substantially the same, formed staple height. In at least one such embodiment, as a result of the above, the formed outer staples **2220***a* and the inner staples **2220***b* may have the same, or at least substantially the same, amount of compressible cartridge body **2610** contained therein; however, as the outer staples **2220***a* have a taller unformed staple height than the inner staples **2220***b* and may have the same formed staple height nonetheless, a greater clamping pressure can be generated in the outer staples **2220***a* than the inner staples **2220***b*, for example.

In various embodiments, referring now to FIG. **117**, an end effector of a surgical stapler can comprise an anvil **2740**, a staple cartridge channel **2530**, and a staple cartridge **2700** positioned within the staple cartridge channel **2530**. Similar to the above, the staple cartridge **2700** can comprise a compressible, implantable cartridge body **2710** comprising an inner layer **2712**, an outer layer **2711**, and a plurality of staples, such as staples **2220***a* and **2220***b*, for example, positioned therein. In at least one embodiment, the thickness of the cartridge body **2710** can vary across its width. In at least one such embodiment, the cartridge body **2710** can comprise a center portion **2708** and side portions **2709**, wherein the center portion **2708** can comprise a thickness which is greater than the thickness of the side portions **2709**. In various embodiments, the thickest portion of the cartridge body **2710** can be located at the center portion **2708** while the thinnest portion of the cartridge body **2710** can be located at the side portions **2709**. In at least one such embodiment, the thickness of the cartridge body **2710** can decrease gradually between the center portion **2708** and the side portions **2709**. In certain embodiments, the thickness of the cartridge body **2710** can decrease linearly and/or geometrically between the center portion **2708** and the side portions **2709**. In at least one such embodiment, the tissue-contacting surface **2719** of cartridge body **2710** can comprise two inclined, or angled, surfaces which slope downwardly from the center portion **2708** toward the side portions **2709**. In various embodiments, the anvil **2740** can comprise two inclined, or angled, surfaces which parallel, or at least substantially parallel, the inclined tissue-contacting surfaces **2719**. In at least one embodiment, the anvil **2740** can further comprise at least one piece of buttress material **2760** attached to the inclined surfaces of the anvil **2740**.

In various embodiments, further to the above, the inner rows of staples in the staple cartridge **2700** can comprise the taller staples **2220***a* and the outer rows of staples can comprise the shorter staples **2220***b*. In at least one embodiment, the taller staples **2220***a* can be positioned within and/or adjacent to the thicker center portion **2708** while the staples **2220***b* can be positioned within and/or adjacent to the side portions **2709**. In at least one such embodiment, as a result of the above, the taller staples **2220***a* can capture more material of the implantable cartridge body **2710** than the shorter staples **2220***b*. Such circumstances could result in the staples **2220***a* applying a greater clamping pressure to the tissue T than the staples **2220***b*. In certain embodiments, even though the taller staples **2220***a* may capture more material of the cartridge body **2710** therein than the shorter staples **2220***b*, the taller staples **2220***a* may have a taller formed staple height than the shorter staples **2220***b* owing to the inclined arrangement of the staple forming pockets **2742***a* and **2742***b*. Such considerations can be utilized to achieve a desired clamping pressure within the tissue captured by the staples **2220***a* and **2220***b* wherein, as a result, the clamping pressure in the staples **2220***a* can be greater than, less than, or equal to the clamping pressure applied to the tissue by the staples **2220***b*, for example. In various alternative embodiments to the end effector illustrated in FIG. **117**, the shorter staples **2220***b* can be positioned within and/or adjacent to the thicker center portion **2708** of the cartridge body **2710** and the taller staples **2220***a* can be positioned within and/or adjacent to the thinner side portions **2709**. Furthermore, although the staple cartridge **2700** is depicted as comprising inner and outer rows of staples, the staple cartridge **2700** may comprise additional rows of staples, such as staple rows positioned intermediate the inner and outer rows of staples, for example. In at least one such embodiment, the intermediate staple rows can comprise staples having an unformed staple height which is intermediate the unformed staple heights of the staples **2220***a* and **2220***b* and a formed staple height which is intermediate the formed staple heights of the staples **2220***a* and **2220***b*, for example.

In various embodiments, referring now to FIG. **118**, an end effector of a surgical stapler can comprise an anvil **2840**, a staple cartridge channel **2530**, and a staple cartridge **2800** positioned within the staple cartridge channel **2530**. Similar to the above, the staple cartridge **2800** can comprise a compressible, implantable cartridge body **2810** comprising an inner layer **2812**, an outer layer **2811**, and a plurality of staples, such as staples **2220***a* and **2220***b*, for example, positioned therein. In at least one embodiment, the thickness of the cartridge body **2810** can vary across its width. In at least one such embodiment, the cartridge body **2810** can comprise a center portion **2808** and side portions **2809**, wherein the center portion **2808** can comprise a thickness which is less than the thickness of the side portions **2809**. In various embodiments, the thinnest portion of the cartridge body **2810** can be located at the center portion **2808** while the thickest portion of the cartridge body **2810** can be located at the side portions **2809**. In at least one such embodiment, the thickness of the cartridge body **2810** can increase gradually between the center portion **2808** and the side portions **2809**. In certain embodiments, the thickness of the cartridge body **2810** can increase linearly and/or geometrically between the center portion **2808** and the side portions **2809**. In at least one such embodiment, the tissue-contacting surface **2819** of cartridge body **2810** can comprise two inclined, or angled, surfaces which slope upwardly from the center portion **2808** toward the side portions **2809**.

In various embodiments, the anvil **2840** can comprise two inclined, or angled, surfaces which parallel, or at least substantially parallel, the inclined tissue-contacting surfaces **2819**. In at least one embodiment, the anvil **2840** can further comprise at least one piece of buttress material **2860** attached to the inclined surfaces of the anvil **2840**. In various embodiments, further to the above, the outer rows of staples in the staple cartridge **2800** can comprise the taller staples **2220***a* and the inner rows of staples can comprise the shorter staples **2220***b*. In at least one embodiment, the taller staples **2220***a* can be positioned within and/or adjacent to the thicker side portions **2809** while the staples **2220***b* can be positioned within and/or adjacent to the center portion **2808**. In at least one such embodiment, as a result of the above, the taller staples **2220***a* can capture more material of the implantable cartridge body **2810** than the shorter staples **2220***b*.

As described above with regard to the embodiment of FIG. **111**, for example, the staple cartridge channel **2230** can comprise a stepped support surface **2231** which can be configured to support the staples **2220***a* and **2220***b* at different heights with respect the anvil **2240**. In various embodiments, the staple cartridge channel **2230** can be comprised of metal and the steps in the support surface **2231** may be formed in the support surface **2231** by a grinding operation, for example. In various embodiments, referring now to FIG. **119**, an end effector of a surgical instrument can comprise a staple cartridge channel **2930** comprising a support insert **2935** positioned therein. More particularly, in at least one embodiment, the staple cartridge channel **2930** can be formed such that it has a flat, or at least substantially flat, support surface **2931**, for example, which can be configured to support the insert **2935** which comprises the stepped surfaces for supporting the staples **2220***a* and **2220***b* of the staple cartridge **2200** at different heights. In at least one such embodiment, the insert **2935** can comprise a flat, or at least substantially flat, bottom surface which can be positioned against the support surface **2931**. The insert **2935** can further comprise support slots, grooves, or troughs **2932***a* and **2932***b* which can be configured to support the staples **2220***a* and **2220***b*, respectively, at different heights. Similar to the above, the insert **2935** can comprise a knife slot **2939** defined therein which can be configured to permit a cutting member to pass therethrough. In various embodiments, the staple cartridge channel **2930** can be comprised of the same material as or a different material than the support insert **2935**. In at least one embodiment, the staple cartridge channel **2930** and the support insert **2935** can both be comprised of metal, for example, while, in other embodiments, the staple cartridge channel **2930** can be comprised of metal, for example, and the support insert **2935** can be comprised of plastic, for example. In various embodiments, the support insert **2935** can be fastened and/or welded into the staple cartridge channel **2930**. In certain embodiments, the support insert **2935** can be snap-fit and/or press-fit into the staple cartridge channel **2930**. In at least one embodiment the support insert **2935** can be secured in the staple cartridge channel **2930** using an adhesive.

In various embodiments, referring now to FIG. **120**, an end effector of a surgical stapler can comprise an anvil **3040**, a staple cartridge channel **3030**, and a compressible, implantable staple cartridge **3000** positioned in the staple cartridge channel **3030**. Similar to the above, the anvil **3040** can comprise a plurality of staple-forming pockets **3042** defined therein and a knife slot **3049** which can be configured to slidably receive a cutting member therein. Also similar to the above, the staple cartridge channel **3030** can comprise a plurality of staple support slots **3032** defined therein and a knife slot **3039** which can also be configured to slidably receive a cutting member therein. In various embodiments, the staple cartridge **3000** can comprise a first layer **3011**, a second layer **3012**, and a plurality of staples, such as staples **3020***a* and **3020***b*, for example, positioned therein. In at least one embodiment, the staples **3020***a* can comprise an unformed staple height which is taller than the unformed staple height of the staples **3020***b*. In various embodiments, the first layer **3011** can be comprised of a first compressible material and the second layer **3012** can be comprised of a second compressible material. In certain embodiments, the first compressible material can be compressed at a rate which is higher than the second compressible material while, in certain other embodiments, the first compressible material can be compressed at a rate which is lower than the second compressible material. In at least one embodiment, the first compressible material can be comprised of a resilient material which can comprise a first spring rate and the second compressible material can be comprised of a resilient material which can comprise a second spring rate which is different than the first spring rate. In various embodiments, the first compressible material can comprise a spring rate which is greater than the spring rate of the second compressible material. In certain other embodiments, the first compressible material can comprise a spring rate which is less than the spring rate of the second compressible material. In various embodiments, the first compressible layer can comprise a first stiffness and the second compressible layer can comprise a second stiffness, wherein the first stiffness is different than the second stiffness. In various embodiments, the first compressible layer can comprise a stiffness which is greater than the stiffness of the second compressible layer. In certain other embodiments, the first compressible layer can comprise a stiffness which is less than the stiffness of the second compressible layer.

In various embodiments, referring again to FIG. **120**, the second layer **3012** of the staple cartridge **3000** can comprise a constant, or at least substantially constant, thickness across the width thereof. In at least one embodiment, the first layer **3011** can comprise a thickness which varies across the width thereof. In at least one such embodiment, the first layer **3011** can comprise one or more steps **3008** which can increase the thickness of the cartridge body **3010** in certain portions of the cartridge body **3010**, such as the center portion, for example. Referring again to FIG. **120**, the shorter staples **3020***b* can be positioned in or aligned with the steps **3008**, i.e., the thicker portions of the cartridge body **3010**, and the taller staples **3020***a* can be positioned in or aligned with the thinner portions of the cartridge body **3010**. In various embodiments, as a result of the thicker and thinner portions of the cartridge body **3010**, the stiffness of the cartridge body **3010** can be greater along the inner rows of staples **3020***b* than the outer rows of staples **3020***a*. In various embodiments, the first layer **3011** can be connected to the second layer **3012**. In at least one such embodiment, the first layer **3011** and the second layer **3012** can comprise interlocking features which can retain the layers **3011** and **3012** together. In certain embodiments, the first layer **3011** can comprise a first laminate and the second layer **3012** can comprise a second laminate, wherein the first laminate can be adhered to the second laminate by one or more adhesives. In various embodiments, the staple cartridge **3000** can comprise a knife slot **3003** which can be configured to slidably receive a cutting member therein.

In various embodiments, referring now to FIG. **121**, a staple cartridge **3100** can comprise a compressible, implantable cartridge body **3110** comprising a single layer of compressible material and, in addition, a plurality of staples, such as staples **3020***b*, for example, positioned therein. In at least one embodiment, the thickness of the cartridge body **3110** can vary across the width thereof. In at least one such embodiment, the cartridge body **3110** can comprise steps **3108** extending along the side portions thereof. In various embodiments, referring now to FIG. **122**, a staple cartridge **3200** can comprise a compressible, implantable cartridge body **3210** comprising a single layer of compressible material and, in addition, a plurality of staples, such as staples **3020***b*, for example, positioned therein. In at least one embodiment, the thickness of the cartridge body **3210** can vary across the width thereof. In at least one such embodiment, the cartridge body **3210** can comprise steps **3208** extending along the center portion thereof. In various embodiments, referring now to FIG. **123**, a staple cartridge **3300** can comprise a compressible, implantable cartridge body **3310** wherein, similar to the above, the thickness of the cartridge body **3310** can vary across the width thereof. In at least one embodiment, the thickness of the cartridge body **3310** can increase geometrically between the side portions and the center portion of the cartridge body **3310**. In at least one such embodiment, the thickness of the cartridge body **3310** can be defined by an arcuate or curved profile and can comprise an arcuate or curved tissue-contacting surface **3319**. In certain embodiments, the thickness of the cartridge body **3310**, and the contour of the tissue-contacting surface **3319**, can be defined by one radius of curvature or, alternatively, by several radiuses of curvature, for example. In various embodiments, referring now to FIG. **124**, a staple cartridge **3400** can comprise a compressible, implantable cartridge body **3410** wherein the thickness of the cartridge body **3410** can increase linearly, or at least substantially linearly, between the side portions and the center portion of the cartridge body **3410**.

In various embodiments, referring now to FIG. **125**, a staple cartridge **3500** can comprise a compressible, implantable cartridge body **3510** and a plurality of staples **3520** positioned therein. The implantable cartridge body **3510** can comprise a first inner layer **3512**, a second inner layer **3513**, and an outer layer **3511**. In at least one embodiment, the first inner layer **3512** can comprise a first thickness and the second inner layer **3513** can comprise a second thickness wherein the second inner layer **3513** can be thicker than the first inner layer **3512**. In at least one alternative embodiment, the first inner layer **3512** can be thicker than the second inner layer **3513**. In another alternative embodiment, the first inner layer **3512** can have the same, or at least substantially the same, thickness as the second inner layer **3513**. In certain embodiments, each staple **3520** can comprise a base **3522** and one or more deformable legs **3521** extending from the base **3522**. In various embodiments, each leg **3521** can comprise a tip **3523** which is embedded in the first inner layer **3511** and, in addition, each base **3522** of the staples **3520** can be embedded in the second inner layer **3512**. In at least one embodiment, the first inner layer **3512** and/or the second inner layer **3513** can comprise at least one medicament stored therein and, in various embodiments, the outer layer **3511** can encapsulate and seal the first inner layer **3512** and the second inner layer **3513** such that the medicament does not flow out of the staple cartridge body **3510** until after the outer layer **3511** has been punctured by the staples **3520**. More particularly, further to the above, an anvil can be pushed downwardly against tissue positioned against the tissue-contacting surface **3519** of staple cartridge **3500** such that the cartridge body **3510** is compressed and the surface **3519** is moved downwardly toward, and at least partially below, the staple tips **3523** such that the tips **3523** rupture or puncture the outer layer **3511**. After the outer layer **3511** has been breached by the staple legs **3521**, the at least one medicament M can flow out of the cartridge body **3510** around the staple legs **3521**. In various circumstances, additional compression of the cartridge body **3510** can squeeze additional medicament M out of the cartridge body **3510** as illustrated in FIG. **126**.

In various embodiments, referring again to FIG. **125**, the outer layer **3511** can comprise a water impermeable, or at least substantially impermeable, wrap which can configured to, one, keep the medicament from prematurely flowing out of the staple cartridge **3500** and, two, prevent fluids within a surgical site, for example, from prematurely entering into the staple cartridge **3500**. In certain embodiments, the first inner layer **3512** can comprise a first medicament stored, or absorbed, therein and the second inner layer **3513** can comprise a second medicament stored, or absorbed, therein, wherein the second medicament can be different than the first medicament. In at least one embodiment, an initial compression of the cartridge body **3510**, which causes the rupture of the outer layer **3511**, can generally express the first medicament out of the first inner layer **3512** and a subsequent compression of the cartridge body **3510** can generally express the second medicament out of the second inner layer **3513**. In such embodiments, however, portions of the first medicament and the second medicament may be expressed simultaneously although a majority of the medicament that is initially expressed can be comprised of the first medicament and a majority of the medicament subsequently expressed thereafter can be comprised of the second medicament. In certain embodiments, further to the above, the first inner layer **3512** can be comprised of a more compressible material than the second inner layer **3513** such that the initial compression forces or pressure, which can be lower than the subsequent compression forces or pressure, can cause a larger initial deflection within the first inner layer **3512** than the second inner layer **3513**. This larger initial deflection within the first inner layer **3512** can cause a larger portion of the first medicament to be expressed from the first inner layer **3512** than the second medicament from the second inner layer **3513**. In at least one embodiment, the first inner layer **3512** can be more porous and/or more flexible than the second inner layer **3513**. In at least one such embodiment, the first inner layer **3512** can comprise a plurality of pores, or voids, **3508** defined therein and the second inner layer **3513** can comprise a plurality of pores, or voids, **3509** defined therein wherein, in various embodiments, the pores **3508** can be configured to store the first medicament in the first inner layer **3512** and the pores **3509** can be configured to store the second medicament in the second inner layer **3513**. In certain embodiments, the size and density of the pores **3508** within the first inner layer **3512** and the pores **3509** within the second inner layer **3513** can be selected so as to provide a desired result described herein.

In various embodiments, referring again to FIGS. **125** and **126**, the outer layer **3511**, the first inner layer **3512**, and/or the second inner layer **3513** can be comprised of a bioabsorbable material. In at least one embodiment, the first inner layer **3512** can be comprised of a first bioabsorbable material, the second inner layer **3513** can be comprised of a second bioabsorbable material, and the outer layer **3511** can be comprised of a third bioabsorbable material, wherein the

first bioabsorbable material, the second bioabsorbable material, and/or the third bioabsorbable material can be comprised of different materials. In certain embodiments, the first bioabsorbable material can be bioabsorbed at a first rate, the second bioabsorbable material can be bioabsorbed at a second rate, and the third bioabsorbable material can be bioabsorbed at a third rate, wherein the first rate, the second rate, and/or the third rate can be different. In at least one such embodiment, when a material is bioabsorbed at a particular rate, such a rate can be defined as the amount of material mass that is absorbed by a patient's body over a unit of time. As it is known, the bodies of different patients may absorb different materials at different rates and, thus, such rates may be expressed as average rates in order to account for such variability. In any event, a faster rate may be a rate in which more mass is bioabsorbed for a unit of time than a slower rate. In various embodiments, referring again to FIGS. **125** and **126**, the first inner layer **3512** and/or the second inner layer **3513** can be comprised of a material which bioabsorbs faster than the material comprising the outer layer **3511**. In at least one such embodiment, the first inner layer **3512** and/or the second inner layer **3513** can be comprised of a bioabsorbable foam, tissue sealant, and/or hemostatic material, such as oxidized regenerated cellulose (ORC), for example, and the outer layer **3511** can be comprised of a buttress material and/or plastic material, such as polyglycolic acid (PGA) which is marketed under the trade name Vicryl, polylactic acid (PLA or PLLA), polydioxanone (PDS), polyhydroxyalkanoate (PHA), poliglecaprone 25 (PGCL) which is marketed under the trade name Monocryl, polycaprolactone (PCL), and/or a composite of PGA, PLA, PDS, PHA, PGCL and/or PCL, for example. In such embodiments, the first inner layer **3512** and/or the second inner layer **3513** can immediately treat the tissue and can reduce bleeding from the tissue, for example, wherein the outer layer **3514** can provide longer-term structural support and can be bioabsorbed at a slower rate.

Owing to the slower rate of bioabsorbability of the outer layer **3511**, further to the above, the outer layer **3511** can buttress or structurally reinforce the tissue within the staple line as it heals. In certain embodiments, one of the first inner layer **3512** and the second inner layer **3513** can be comprised of a material which can be bioabsorbed faster than the other such that, in at least one embodiment, one of the layers can provide an initial release of a therapeutic material and the other layer can provide a sustained release of the same therapeutic material and/or a different therapeutic material. In at least one such embodiment, the rate in which a therapeutic material can be released from a layer **3512**, **3513** can be a function of the bioabsorbability of the substrate layer in which the medicament is absorbed or dispersed. For example, in at least one embodiment, the substrate comprising the first inner layer **3512** can be bioabsorbed faster than the substrate comprising the second inner layer **3513** and, as a result, a medicament can be release from the first inner layer **3512** faster than the second inner layer **3513**, for example. In various embodiments, as described herein, one or more of the layers **3511**, **3512**, and **3513** of the cartridge body **3510** can be adhered to one another by at least one adhesive, such as fibrin and/or protein hydrogel, for example. In certain embodiments, the adhesive can be water soluble and can be configured to release the connection between the layers as the staple cartridge **3500** is being implanted and/or some time thereafter. In at least one such embodiment, the adhesive can be configured to bioabsorb faster than the outer layer **3511**, the first inner layer **3512**, and/or the second inner layer **3513**.

In various embodiments, referring now to FIGS. **127** and **128**, a staple cartridge, such as staple cartridge **3600**, for example, can comprise a cartridge body **3610** including a compressible first layer **3611**, a second layer **3612** attached to the first layer **3611**, and a removable compressible layer **3613** attached to the second layer **3612**. In at least one such embodiment, the first layer **3611** can be comprised of a compressible foam material, the second layer **3612** can comprise a laminate material adhered to the first layer **3611** utilizing one or more adhesives, and the third layer **3613** can comprise a compressible foam material removably adhered to the second layer **3612** utilizing one or more adhesives, for example. In various embodiments, the staple cartridge **3600** can further comprise a plurality of staples, such as staples **3620**, for example, positioned in the cartridge body **3610**. In at least one such embodiment, each staple **3620** can comprise a base **3622** positioned in the third layer **3613** and one or more deformable legs **3621** extending upwardly from the base **3622** through the second layer **3612** and into the first layer **3611**, for example. In use, further to the above, the top surface **3619** of the staple cartridge body **3610** can be pushed downwardly by an anvil until the staple legs **3621** penetrate through the top surface **3619** and the targeted tissue and contact the anvil. After the staple legs **3621** have been sufficiently deformed, the anvil can be moved away from the staple cartridge **3600** such that the compressible layers thereof can at least partially re-expand. In various circumstances, the insertion of the staples through the tissue can cause the tissue to bleed. In at least one embodiment, the third layer **3613** can be comprised of an absorbent material, such as protein hydrogel, for example, which can draw blood away from the stapled tissue. In addition to or in lieu of the above, the third layer **3613** can be comprised of a hemostatic material and/or tissue sealant, such as freeze-dried thrombin and/or fibrin, for example, which can be configured to reduce the bleeding from the tissue. In certain embodiments, the third layer **3613** may provide a structural support to the first layer **3611** and the second layer **3612** wherein the third layer **3613** may be comprised of a bioabsorbable material and/or a non-bioabsorbable material. In any event, in various embodiments, the third layer **3613** can be detached from the second layer **3612** after the staple cartridge **3610** has been implanted. In embodiments where the third layer **3613** comprises an implantable-quality material, the surgeon can elect whether to remove the third layer **3613** of the cartridge body **3610**. In at least one embodiment, the third layer **3613** can be configured to be removed from the second layer **3612** in one piece.

In various embodiments, the first layer **3611** can be comprised of a first foam material and the third layer **3613** can be comprised of a second foam material which can be different than the first foam material. In at least one embodiment, the first foam material can have a first density and the second foam material can have a second density wherein the first density can be different than the second density. In at least one such embodiment, the second density can be higher than the first density wherein, as a result, the third layer **3613** may be less compressible, or have a lower compression rate, than the first layer **3611**. In at least one alternative embodiment, the first density can be higher than the second density wherein, as a result, the first layer **3611** may be less compressible, or have a lower compression rate, than the third layer **3613**. In various embodiments, referring now to FIGS. **129** and **130**, a staple cartridge **3700**, similar to the staple cartridge **3600**, can comprise a cartridge body **3710** comprising a first compressible foam layer **3711**, a second layer **3712** attached to the first layer **3711**, and a detachable

third compressible foam layer **3713** removably attached to the second layer **3712**. In at least one such embodiment, the third layer **3713** can comprise a plurality of staple receiving slots, or cut-outs, **3709** which can each be configured to receive at least a portion of a staple **3620**, such as a staple base **3622**, for example, therein. In certain embodiments, the staples **3620** can be configured to slide within the staple receiving slots **3709** or, stated another way, the third layer **3713** can be configured to slide relative to the staples **3620** when the staple cartridge **3700** is positioned against the targeted tissue and compressed by an anvil, for example. In at least one embodiment, the receiving slots **3709** can be configured such that there is clearance between the staples **3620** and the side walls of the receiving slots **3709**. In at least one such embodiment, as a result of the above, the staples **3620** may not capture a portion of the third layer **3713** therein when the staples **3620** are deformed, as illustrated in FIGS. **129** and **130**. In certain other embodiments, the ends of the staple receiving slots **3709** adjacent to the second layer **3712** can be closed by a portion of the third layer **3713** and, as a result, at least a portion of the third layer **3713** can be captured within the staples **3620** when they are deformed. In any event, the third layer **3713** can comprise one or more perforations and/or score marks **3708**, for example, which can be configured to permit the third layer **3713** to be removed from the second layer **3712** in two or more pieces as illustrated in FIG. **129**. In FIG. **129**, one of the pieces of the third layer **3713** is illustrated as being removed by a tool **3755**. In various embodiments, the perforations **3708** can be arranged along a line positioned intermediate a first row of staples and a second row of staples.

In various embodiments, referring again to FIGS. **129** and **130**, the bases **3622** of the staples **3620** can be positioned within the receiving slots **3709** wherein, in at least one embodiment, the side walls of the receiving slots **3709** can be configured to contact and releasable retain the staple legs **3621** in position. In certain embodiments, although not illustrated, the third layer **3713** can comprise an elongated slot surrounding all of the staples within a staple line. In at least one such embodiment, a staple cartridge comprising four staple rows, for example, can comprise an elongate slot aligned with each staple row in the bottom layer of the staple cartridge. Further to the above, at least a portion of the staple cartridge **3600** and/or the staple cartridge **3700** can be implanted within a patient and at least a portion of the staple cartridge can be removable from the patient. In at least one embodiment, referring again to FIGS. **129** and **130**, the first layer **3711** and the second layer **3712** can be captured within the staples **3620** and can be implanted with the staples **3620**, whereas the third layer **3713** can be optionally removed or detached from the staple cartridge **3700**. In various circumstances, the removal of a portion of the implanted staple cartridge can reduce the amount of material that the patient's body has to reabsorb which can provide various therapeutic benefits. In the event that a portion of a staple cartridge is detached and removed, such as by a aparoscopic tool **3755**, for example, the detached staple cartridge portion can be removed from the surgical site through a trocar, such as a trocar having a 5 mm aperture, for example. In certain embodiments, a cartridge body can comprise more than one layer that can be removed. For example, the cartridge body **3710** can comprise a fourth layer wherein the third layer of **3713** of the cartridge body **3710** can be comprised of a hemostatic material and the fourth layer can be comprised of a support layer. In at least one such embodiment, a surgeon can remove the support layer and then elect whether to remove the hemostatic layer, for example.

In various embodiments, referring now to FIG. **131**, a staple cartridge, such as staple cartridge **3800**, for example, can comprise a cartridge body **3810** including an outer layer **3811** and an inner layer **3812**. The inner layer **3812** can be comprised of a compressible foam material and the outer layer **3811** can be at leas partially wrapped around the inner layer **3812**. In at least one embodiment, the outer layer **3811** can comprise a first portion **3811***a* configured to be positioned on a first side of the inner layer **3812** and a second portion **3811***b* configured to be positioned on a second side of the inner layer **3812** wherein the first portion **3811***a* and the second portion **3811***b* can be connected by a flexible hinge, such as hinge **3809**, for example. In at least one such embodiment, at least one adhesive, such as fibrin and/or protein hydrogel, for example, can be applied to the first side and/or the second side of the inner layer **3812** in order to secure the portions of the outer layer **3811** thereto. In various embodiments, the outer layer **3811** can comprise one or more fastening members extending therefrom. In at least one such embodiment, the outer layer **3811** can comprise a plurality of deformable legs **3821** extending from one side of the outer layer **3811** which can be seated in the compressible inner layer **3812**. In at least one such embodiment, the legs **3821** may not protrude from the second side of the inner layer **3812** while, in at least one alternative embodiment, the legs **3821** may at least partially protrude from the inner layer **3812**. When the compressible cartridge body **3810** is compressed, in use, the legs **3821** can be configured to pierce the inner layer **3812** and the second portion **3811***b* of the outer layer **3811**. In certain embodiments, the second portion **3811***b* of the outer layer **3811** can comprise apertures, such as apertures **3808**, for example defined therein which can be configured to receive the staple legs **3821**. In certain embodiments, at least portions of the staple cartridge **3800** can comprise a knife slot **3803** which can be configured to slidably receive a cutting member therein. In at least one such embodiment, the knife slot **3803** may not extend entirely through the thickness of the cartridge body **3810** and, as a result, the cutting member may incise the cartridge body **3810** as it is moved relative thereto.

In various embodiments, referring now to FIG. **132**, a staple cartridge **3900** can comprise, similar to staple cartridge **3800**, a cartridge body **3910** including an inner layer **3812** and an outer layer **3811**, wherein the outer layer **3811** can comprise a first portion **3811***a* positioned adjacent to the first side of the inner layer **3812** and a second portion **3811***b* positioned adjacent to the second side of the inner layer **3812**. In at least one embodiment, similar to the above, the outer layer **3811** can comprise one or more fastening members extending therefrom. In at least one such embodiment, the outer layer **3811** can comprise a plurality of deformable legs **3921** extending from one side of the outer layer **3811** which can be seated in the compressible inner layer **3812**. In certain embodiments, each deformable leg **3921** can comprise at least one hook or barb **3923** protruding therefrom which can be configured to engage the second portion **3811***b* of the outer layer **3811** and, as a result, retain the outer layer **3811** to the inner layer **3812**. In at least one such embodiment, the barbs **3923** can be configured to protrude from the second side of the inner layer **3812** and extend through the apertures **3808** in the second portion **3811***b* of the outer layer **3811** such that the barbs **3923** can engage the outside surface of the outer layer **3811** and lock the outer layer **3811** to the inner layer **3812**. In order to construct the staple cartridge **3900**, the inner layer **3812** may be at least partially com-

pressed in order to cause the barbs to protrude therefrom and enter into the apertures **3808**. In at least one such embodiment, the staple cartridge **3900** can be at least partially pre-compressed when it is inserted into a staple cartridge, for example. In certain embodiments, further to the above, at least a portion of the legs **3921** can be embedded within the first portion **3811***a* of the outer layer **3811** wherein, in at least one embodiment, the outer layer **3811** can be comprised of a plastic material, such as polydioxanone (PDS) and/or polyglycolic acid (PGA), for example, and the plastic material can be overmolded around at least a portion of the legs **3921**.

In various embodiments, referring now to FIGS. **133-137**, a staple cartridge, such as staple cartridge **4000**, for example, can comprise a cartridge body **4010** including a compressible first layer **4011** and a second layer **4012** and, in addition, a plurality of staples **4020** positioned within the cartridge body **4010**. In certain embodiments, referring to FIG. **135**, each staple **4020** can comprise a base **4022** and at least one deformable leg **4023** extending from the base **4022**. In at least one embodiment, referring to FIG. **133**, the staple cartridge **4000** can be positioned between a staple cartridge channel **4030** and an anvil **4040** of an end effector of a surgical stapler wherein the second layer **4012** of the cartridge body **4010** and/or the bases **4022** of the staples **4020** can be positioned against the staple cartridge channel **4030**. In various embodiments, referring now to FIG. **134**, the second layer **4012** can comprise a layer of pledgets **4060** interconnected to one another by a pledget support frame **4061**. In at least one such embodiment, the pledgets **4060** and the pledget support frame **4061** can be comprised of a molded plastic material, such as polyglycolic acid (PGA), for example. Each pledget **4060** can comprise one or more apertures or slots **4062** which can be configured to receive a staple leg **4021** extending therethrough as illustrated in FIGS. **135** and **136**. Each pledget **4060** can further comprise a receiving slot **4063** defined therein which can be configured to receive a base **4022** of a staple **4020**. In various embodiments, referring again to FIG. **134**, the pledgets **4060** and/or pledget support fame **4061** can comprise a plurality of score marks, perforations, or the like which can be configured to allow the pledgets **4060** to become detached from the pledget support frame **4061** at a desired location. Similarly, referring to FIG. **136**, one or more pledgets **4060** can be connected to one another along a line comprising perforations and/or score marks **4064**, for example. In use, the compressible foam layer **4011** can be positioned against the targeted tissue T and the cartridge body **4010** can be compressed by the anvil **4040** such that the anvil **4040** can deform the staples **4020**. When the staples **4020** are deformed, the staple legs **4021** of each staple **4020** can capture the tissue T, a portion of the first layer **4011**, and a pledget **4060** within the deformed staple. When the staple cartridge channel **4030** is moved away from the implanted staple cartridge **4060**, for example, the pledget support frame **4061** can be detached from the pledgets **4060** and/or the pledgets **4060** can be detached from one another. In certain circumstances, the pledgets **4060** can be detached from the frame **4061** and/or each other when the staples **4020** are being deformed by the anvil **4040** as described above.

In various embodiments described herein, the staples of a staple cartridge can be fully formed by an anvil when the anvil is moved into a closed position. In various other embodiments, referring now to FIGS. **138-141**, the staples of a staple cartridge, such as staple cartridge **4100**, for example, can be deformed by an anvil when the anvil is moved into a closed position and, in addition, by a staple driver system which moves the staples toward the closed anvil. The staple cartridge **4100** can comprise a compressible cartridge body **4110** which can be comprised of a foam material, for example, and a plurality of staples **4120** at least partially positioned within the compressible cartridge body **4110**. In various embodiments, the staple driver system can comprise a driver holder **4160**, a plurality of staple drivers **4162** positioned within the driver holder **4160**, and a staple cartridge pan **4180** which can be configured to retain the staple drivers **4162** in the driver holder **4160**. In at least one such embodiment, the staple drivers **4162** can be positioned within one or more slots **4163** in the driver holder **4160** wherein the sidewalls of the slots **4163** can assist in guiding the staple drivers **4162** upwardly toward the anvil. In various embodiments, the staples **4120** can be supported within the slots **4163** by the staple drivers **4162** wherein, in at least one embodiment, the staples **4120** can be entirely positioned in the slots **4163** when the staples **4120** and the staple drivers **4162** are in their unfired positions. In certain other embodiments, at least a portion of the staples **4120** can extend upwardly through the open ends **4161** of slots **4163** when the staples **4120** and staple drivers **4162** are in their unfired positions. In at least one such embodiment, referring primarily now to FIG. **139**, the bases of the staples **4120** can be positioned within the driver holder **4160** and the tips of the staples **4120** can be embedded within the compressible cartridge body **4110**. In certain embodiments, approximately one-third of the height of the staples **4120** can be positioned within the driver holder **4160** and approximately two-thirds of the height of the staples **4120** can be positioned within the cartridge body **4110**. In at least one embodiment, referring to FIG. **138A**, the staple cartridge **4100** can further comprise a water impermeable wrap or membrane **4111** surrounding the cartridge body **4110** and the driver holder **4160**, for example.

In use, the staple cartridge **4100** can be positioned within a staple cartridge channel, for example, and the anvil can be moved toward the staple cartridge **4100** into a closed position. In various embodiments, the anvil can contact and compress the compressible cartridge body **4110** when the anvil is moved into its closed position. In certain embodiments, the anvil may not contact the staples **4120** when the anvil is in its closed position. In certain other embodiments, the anvil may contact the legs of the staples **4120** and at least partially deform the staples **4120** when the anvil is moved into its closed position. In either event, the staple cartridge **4100** can further comprise one or more sleds **4170** which can be advanced longitudinally within the staple cartridge **4100** such that the sleds **4170** can sequentially engage the staple drivers **4162** and move the staple drivers **4162** and the staples **4120** toward the anvil. In various embodiments, the sleds **4170** can slide between the staple cartridge pan **4180** and the staple drivers **4162**. In embodiments where the closure of the anvil has started the forming process of the staples **4120**, the upward movement of the staples **4120** toward the anvil can complete the forming process and deform the staples **4120** to their fully formed, or at least desired, height. In embodiments where the closure of the anvil has not deformed the staples **4120**, the upward movement of the staples **4120** toward the anvil can initiate and complete the forming process and deform the staples **4120** to their fully formed, or at least desired, height. In various embodiments, the sleds **4170** can be advanced from a proximal end of the staple cartridge **4100** to a distal end of the staple cartridge **4100** such that the staples **4120** positioned in the proximal end of the staple cartridge **4100** are fully formed before the staples **4120** positioned in the distal

end of the staple cartridge **4100** are fully formed. In at least one embodiment, referring to FIG. **140**, the sleds **4170** can each comprise at least one angled or inclined surface **4711** which can be configured to slide underneath the staple drivers **4162** and lift the staple drivers **4162** as illustrated in FIG. **141**.

In various embodiments, further to the above, the staples **4120** can be formed in order to capture at least a portion of the tissue T and at least a portion of the compressible cartridge body **4110** of the staple cartridge **4100** therein. After the staples **4120** have been formed, the anvil and the staple cartridge channel **4130** of the surgical stapler can be moved away from the implanted staple cartridge **4100**. In various circumstances, the cartridge pan **4180** can be fixedly engaged with the staple cartridge channel **4130** wherein, as a result, the cartridge pan **4180** can become detached from the compressible cartridge body **4110** as the staple cartridge channel **4130** is pulled away from the implanted cartridge body **4110**. In various embodiments, referring again to FIG. **138**, the cartridge pan **4180** can comprise opposing side walls **4181** between which the cartridge body **4110** can be removably positioned. In at least one such embodiment, the compressible cartridge body **4110** can be compressed between the side walls **4181** such that the cartridge body **4110** can be removably retained therebetween during use and releasably disengaged from the cartridge pan **4180** as the cartridge pan **4180** is pulled away. In at least one such embodiment, the driver holder **4160** can be connected to the cartridge pan **4180** such that the driver holder **4160**, the drivers **4162**, and/or the sleds **4170** can remain in the cartridge pan **4180** when the cartridge pan **4180** is removed from the surgical site. In certain other embodiments, the drivers **4162** can be ejected from the driver holder **4160** and left within the surgical site. In at least one such embodiment, the drivers **4162** can be comprised of a bioabsorbable material, such as polyglycolic acid (PGA) which is marketed under the trade name Vicryl, polylactic acid (PLA or PLLA), polydioxanone (PDS), polyhydroxyalkanoate (PHA), poliglecaprone 25 (PGCL) which is marketed under the trade name Monocryl, polycaprolactone (PCL), and/or a composite of PGA, PLA, PDS, PHA, PGCL and/or PCL, for example. In various embodiments, the drivers **4162** can be attached to the staples **4120** such that the drivers **4162** are deployed with the staples **4120**. In at least one such embodiment, each driver **4162** can comprise a trough configured to receive the bases of the staples **4120**, for example, wherein, in at least one embodiment, the troughs can be configured to receive the staple bases in a press-fit and/or snap-fit manner.

In certain embodiments, further to the above, the driver holder **4160** and/or the sleds **4170** can be ejected from the cartridge pan **4180**. In at least one such embodiment, the sleds **4170** can slide between the cartridge pan **4180** and the driver holder **4160** such that, as the sleds **4170** are advanced in order to drive the staple drivers **4162** and staples **4120** upwardly, the sleds **4170** can move the driver holder **4160** upwardly out of the cartridge pan **4180** as well. In at least one such embodiment, the driver holder **4160** and/or the sleds **4170** can be comprised of a bioabsorbable material, such as polyglycolic acid (PGA) which is marketed under the trade name Vicryl, polylactic acid (PLA or PLLA), polydioxanone (PDS), polyhydroxyalkanoate (PHA), poliglecaprone 25 (PGCL) which is marketed under the trade name Monocryl, polycaprolactone (PCL), and/or a composite of PGA, PLA, PDS, PHA, PGCL and/or PCL, for example. In various embodiments, the sleds **4170** can be integrally formed and/or attached to a drive bar, or cutting member, which pushes the sleds **4170** through the staple cartridge **4100**. In such embodiments, the sleds **4170** may not be ejected from the cartridge pan **4180** and may remain with the surgical stapler while, in other embodiments in which the sleds **4170** are not attached to the drive bar, the sleds **4170** may be left in the surgical site. In any event, further to the above, the compressibility of the cartridge body **4110** can allow thicker staple cartridges to be used within an end effector of a surgical stapler as the cartridge body **4110** can compress, or shrink, when the anvil of the stapler is closed. In certain embodiments, as a result of the staples being at least partially deformed upon the closure of the anvil, taller staples, such as staples having an approximately 0.18" staple height, for example, could be used, wherein approximately 0.12" of the staple height can be positioned within the compressible layer **4110** and wherein the compressible layer **4110** can have an uncompressed height of approximately 0.14", for example.

In various embodiments, referring now to FIGS. **142-145**, a staple cartridge, such as staple cartridge **4200**, for example, can comprise a compressible cartridge body **4210**, a plurality of staples **4220** positioned therein, and a plurality of flexible lateral support members **4234**. In various embodiments, referring now to FIG. **143**, the staple cartridge **4200** can be positioned intermediate an anvil **4240** and a staple cartridge channel **4230** wherein, in at least one embodiment, the lateral support members **4234** can be attached to the staple cartridge channel **4230**. When the anvil **4240** is moved downwardly to compress the cartridge body **4210** and at least partially deform the staples **4220**, as illustrated in FIG. **144**, the side portions of the cartridge body **4210** can bulge laterally and push the lateral support members **4234** outwardly. In at least one such embodiment, the lateral support members **4234** can be attached to the cartridge body **4210** and, when the cartridge body **4210** bulges laterally as described above, the lateral support members **4234** can detach from the cartridge body **4210** as illustrated in FIG. **144**. In at least one embodiment, the lateral support members **4234** can be adhered to the cartridge body **4210** utilizing at least one adhesive, such as fibrin and/or protein hydrogel, for example. Similar to the above, the closing of the anvil **4240** may only partially deform the staples **4220**, wherein the formation of the staples **4220** can be completed by the advancement of one or more sleds **4270** through the staple cartridge **4200** as illustrated in FIG. **145**. In various embodiments, referring now to FIGS. **147** and **148**, the sleds **4270** can be advanced from a proximal end of the staple cartridge **4200** to a distal end of the staple cartridge **4200** by a cutting member **4280**. In at least one such embodiment, the cutting member **4280** can comprise a cutting element, or knife, **4283**, which can be advanced through the tissue T and/or the compressible cartridge body **4210**. In certain embodiments, the cutting member **4280** can comprise camming members **4282** which can travel along the outside surfaces of the jaws **4230** and **4240** and move or hold the jaws in position. In various embodiments, as a result of the above, the staples **4220** can be formed into their final shapes at the same time, or at least substantially the same time, as the tissue T is incised. In at least one such embodiment, the sleds **4270** can be positioned distally with respect to the knife **4283** such that the tissue T is only incised when the proceeding portion of the tissue has been fully stapled, for example.

In various embodiments, referring again to FIGS. **147** and **148**, the sleds **4270** can comprise separate slidable members which are advanced together by the cutting member **4280**. In at least one such embodiment, the sleds **4270** can be contained within the staple cartridge **4200** and the cutting

member **4280** can be advanced into the staple cartridge **4200** by a firing bar **4281** such that the cutting member **4280** engages the sleds **4270** and advances the sleds **4270** distally. In certain embodiments, the sleds **4270** can be connected to one another. In either event, each sled **4270** can comprise an angled surface, or cam, **4271** which can be configured to lift the staples **4220** aligned within a staple row. In certain embodiments, the angled surfaces **4271** can be integrally formed with the cutting member **4280**. In at least one embodiment, referring again to FIGS. **147** and **148**, each staple **4200** can comprise a base, at least one deformable member extending from the base, and a crown **4229** overmolded onto and/or positioned around at least a portion of the base and/or the deformable members of the staple **4200**. In various embodiments, such crowns **4229** can be configured to be driven directly by a sled **4270**, for example. More particularly, in at least one embodiment, the crowns **4229** of staples **4220** can be configured such that the angled surfaces **4271** of the sleds **4270** can slide underneath and directly contact the crowns **4229** without a staple driver positioned therebetween. In such embodiments, each crown **4229** can comprise at least one co-operating angled or inclined surface which can be engaged by an angled surface **4271** of the sleds **4270** such that the co-operating angled surfaces can drive the staples **4220** upwardly when the sleds **4270** are slid underneath the staples **4220**.

In various embodiments, referring now to FIG. **146**, a staple cartridge, such as staple cartridge **4300**, for example, can comprise a compressible body **4310** and a plurality of staples **4320** positioned within the compressible body **4310**. Similar to the above, the staple cartridge **4300** can comprise flexible lateral supports **4334** which can be attached to a staple cartridge channel and/or adhered to the compressible body **4310**. In addition to the above, the flexible lateral supports **4334** can be connected together by one or more struts, or connection members, **4335** which can be configured to hold the lateral supports **4334** together. In use, the connection members **4335** can be configured to prevent, or at least inhibit, the lateral supports **4334** from becoming prematurely detached from the cartridge body **4310**. In certain embodiments, the connection members **4335** can be configured to hold the lateral supports **4334** together after the staple cartridge **4300** has been compressed by an anvil. In such embodiments, the lateral supports **4334** can resist the lateral bulging, or displacement, of the lateral portions of the cartridge body **4310**. In certain embodiments, a cutting member, such as cutting member **4280**, for example, can be configured to transect the connection members **4335** as the cutting member **4280** is moved distally within the cartridge body **4310**. In at least one such embodiment, the cutting member **4280** can be configured to push one or more sleds, such as sleds **4270**, for example, distally in order to form the staples **4320** against an anvil. The sleds **4270** can lead the cutting edge **4283** such that the cutting member **4280** does not transect a connection member **4335** until the staples **4320** adjacent to that connection member **4335** have been fully formed, or at least formed to a desired height. In various circumstances, the connection members **4335**, in co-operation with the lateral supports **4334**, can prevent, or at least reduce, the lateral movement of the compressible cartridge body **4310** and, concurrently, prevent, or at least reduce, the lateral movement of the staples **4320** positioned within the cartridge body **4310**. In such circumstances, the connection members **4335** can hold the staples **4320** in position until after they are deformed and the connection members **4335** can be thereafter cut to release the lateral portions of the cartridge body **4310**. As mentioned above, the lateral supports **4334** can be connected to the staple cartridge channel and, as a result, can be removed from the surgical site with the staple cartridge channel after the staple cartridge **4300** has been implanted. In certain embodiments, the lateral supports **4334** can be comprised of an implantable material and can be left within a surgical site. In at least one embodiment, the connection members **4335** can be positioned intermediate the cartridge body **4310** and the tissue T and, after the connection members **4335** have been detached from the lateral supports **4334**, the connections members **4335** can remain implanted in the patient. In at least one such embodiment, the connection members **4335** can be comprised of an implantable material and, in certain embodiments, the connection members **4335** can be comprised of the same material as the lateral supports **4334**, for example. In various embodiments, the connection members **4335** and/or lateral supports **4334** can be comprised of a flexible bioabsorbable material such as polyglycolic acid (PGA) which is marketed under the trade name Vicryl, polylactic acid (PLA or PLLA), polydioxanone (PDS), polyhydroxyalkanoate (PHA), poliglecaprone 25 (PGCL) which is marketed under the trade name Monocryl, polycaprolactone (PCL), and/or a composite of PGA, PLA, PDS, PHA, PGCL and/or PCL, for example. In various embodiments, a connection member can comprise a sheet of material connecting the lateral supports **4334**. In certain embodiments, a staple cartridge can comprise connection members extending across the top surface of the cartridge body **4310** and, in addition, connection members extending around the bottom surface of the cartridge body **4310**.

In various embodiments, referring now to FIG. **149**, a staple cartridge can comprise staples, such as staples **4420**, for example, which can comprise a wire portion inserted into a crown portion. In at least one embodiment, the wire portion can be comprised of metal, such as titanium and/or stainless steel, for example, and/or plastic, such as polydioxanone (PDS) and/or polyglycolic acid (PGA), for example. In at least one embodiment, the crown portion can be comprised of metal, such as titanium and/or stainless steel, for example, and/or plastic, such as polydioxanone (PDS) and/or polyglycolic acid (PGA), for example. In certain embodiments, the wire portion of each staple **4420** can comprise a base **4422** and deformable legs **4421** extending from the base **4422** wherein the crown portion of each staple **4420** can comprise a crown **4429** which can be configured to receive at least a portion of a base **4422** therein. In order to assemble the portions of each staple **4420**, referring now to FIGS. **150**A-**150**C, the legs **4421** of the wire portion can be inserted into an opening **4426** in a crown **4429** wherein the opening **4426** can be configured to guide the legs **4421** into a base chamber **4427**. The wire portion can be further inserted into the crown **4429** such that the legs **4421** exit the base chamber **4427** and the base **4422** of the wire portion enters into the base chamber **4427**. In at least one such embodiment, the base chamber **4427** can be configured such that the wire portion is rotated within the crown **4429** as the base **4422** enters into the base chamber **4427** such that the staple legs **4421** are pointed in an upward, or at least substantially upward, direction. In various embodiments, referring again to FIG. **149**, the crown **4429** can comprise exit holes **4425** which can be configured to receive the staple legs **4421** therein.

In various embodiments, further to the above, a surgical stapler can comprise a sled **4470** configured to transverse the staple cartridge **4400** and staple cartridge channel **4430** and move the staples **4420** contained within the cartridge body **4410** toward an anvil. In various circumstances, the sled

4470 can be moved from a proximal end of the staple cartridge channel 4430 to a distal end of the cartridge channel 4430 in order to implant the cartridge body 4410 and the staples 4420. In certain circumstances, the sled 4470 can be retracted or returned to the proximal end of the cartridge channel 4430 and another staple cartridge 4400 can be inserted into the cartridge channel 4430. Once the new staple cartridge 4400 has been positioned within the cartridge channel 4430, the sled 4470 can be advanced distally once again. In various embodiments, the surgical stapler may comprise one or more lock-out features which can prevent the sled 4470 from being advanced distally once again without a new staple cartridge 4400 being positioned within the cartridge channel 4430. In at least one such embodiment, referring again to FIG. 149, the staple cartridge channel 4430 can comprise a lock-out shoulder 4439 which can be configured to prevent, or at least limit, the distal movement of the sled 4470. More particularly, the sled 4470 can be configured to abut the shoulder 4439 unless the sled 4470 is at least partially lifted upwardly over the shoulder 4439 by a lift feature 4428, for example, extending between the proximal-most staples 4420 within a staple cartridge 4400. Stated another way, absent the presence of the proximal-most staples 4420 in a new staple cartridge 4400, the sled 4470 cannot be advanced. Thus, when an expended staple cartridge 4400 is present within the cartridge channel 4430, or no staple cartridge 4400 is present in the cartridge channel 4430 at all, the sled 4470 cannot be advanced within the cartridge channel 4430.

Further to the above, referring now to FIG. 151, a staple cartridge, such as staple cartridge 4500, for example, can be positioned within a staple cartridge channel 4530 and can comprise a compressible cartridge body 4510, a plurality of staples 4520 positioned within the cartridge body 4510, and a cartridge pan, or retainer, 4580. In various embodiments, the compressible cartridge body 4510 can comprise an outer layer 4511 and an inner layer 4512 wherein, in at least one embodiment, the outer layer 4511 can sealingly enclose the inner layer 4512. In at least one such embodiment, the outer layer 4511 can extend between the inner layer 4512 and the cartridge pan 4580. In certain other embodiments, the outer layer 4511 may only partially surround the inner layer 4512 and, in at least one such embodiment, the outer layer 4511 and the cartridge pan 4580 can co-operate to encompass, or at least substantially encompass, the inner layer 4512. In various embodiments, further to the above, the staples 4520 can be supported by the cartridge pan 4580 wherein the cartridge pan 4580 can comprise one or more staple support channels configured to support the staples 4520. In certain embodiments, the cartridge pan 4580 can be attached to the cartridge body 4510 wherein, in at least one such embodiment, the cartridge body 4510 can be compressed laterally between opposing side walls of the cartridge pan 4580. In various embodiments, the side walls of the cartridge pan 4580 can support the cartridge body 4510 laterally and, in at least one such embodiment, the cartridge pan 4580 can comprise one or more walls, or fins, 4582 extending upwardly from the bottom support 4583 into the cartridge body 4510. In at least one such embodiment, the cartridge body 4510 can comprise one or more slots, or channels, therein which can be configured to receive and/or interlock with the walls 4582. In various embodiments, the walls 4582 can extend partially, or almost entirely, through the cartridge body 4510. In at least one such embodiment, the walls 4582 can extend longitudinally through the staple cartridge 4500 between a first row of staples 4520 and a second row of staples 4520.

In various embodiments, the cartridge body 4510 and/or the cartridge pan 4580 can comprise co-operating retention features which can provide a snap-fit between the cartridge pan 4580 and the cartridge body 4510. In certain embodiments, the staple cartridge 4500 can be positioned within the cartridge channel 4530 such that the cartridge pan 4580 is positioned against and/or attached to the cartridge channel 4530. In at least one embodiment, the cartridge pan 4580 can be detachably coupled to the cartridge channel 4530 such that, after the staple cartridge 4500 has been compressed by the anvil 4540 and the staples 4520 have been deformed, the cartridge pan 4580 can detach from the cartridge channel 4530 and can be implanted with the cartridge body 4510. In at least one such embodiment, the cartridge pan 4580 can be comprised of a bioabsorbable material such as polyglycolic acid (PGA) which is marketed under the trade name Vicryl, polylactic acid (PLA or PLLA), polydioxanone (PDS), polyhydroxyalkanoate (PHA), poliglecaprone 25 (PGCL) which is marketed under the trade name Monocryl, polycaprolactone (PCL), and/or a composite of PGA, PLA, PDS, PHA, PGCL and/or PCL, for example. In certain embodiments, a surgical stapler can further comprise a firing mechanism and/or driver which can be slid intermediate the staple cartridge channel 4530 and a bottom drive surface on the cartridge pan 4580 which can be configured to lift or eject the cartridge pan 4580 from the cartridge channel 4530. In certain embodiments, the cartridge body 4510 can be detachably coupled to the cartridge pan 4580 such that, after the staple cartridge 4500 has been compressed by the anvil 4540 and the staples 4520 have been deformed, the cartridge body 4510 can detach from the cartridge pan 4580. In at least one such embodiment, the cartridge pan 4580 can remain fixedly engaged with the cartridge channel 4530 such that the cartridge pan 4580 is removed from the surgical site with the cartridge channel 4530. In certain embodiments, a surgical stapler can further comprise a firing mechanism and/or driver which can be slid intermediate the staple cartridge pan 4580 and a bottom drive surface on the cartridge body 4510 which can be configured to lift or eject the cartridge body 4510 from the cartridge pan 4580. In at least one such embodiment, the staple cartridge 4500 can further comprise staple drivers positioned intermediate the cartridge pan 4580 and the staples 4520 such that, as the firing mechanism is slid distally, the staple drivers and the staples 4520 can be driven upwardly toward the anvil. In at least one such embodiment, the staple drivers can be at least partially embedded within the compressible cartridge body 4510.

In various embodiments, similar to the above, the staple cartridge 4500 can comprise a lock-out feature which can be configured to prevent, or at least limit, the distal movement of a cutting member unless a unfired staple cartridge 4500 has been positioned within the staple cartridge channel 4530. In certain embodiments, the staple cartridge pan 4580 can comprise a surface which lifts the cutting member upwardly and over a locking surface within the staple cartridge channel 4530, for example. In the event that a staple cartridge 4500 comprising a cartridge pan 4580 is not present in the cartridge channel 4530, the cutting member cannot be advanced. In at least one embodiment, the proximal-most staples, and/or any other suitable staples, within a staple cartridge 4500 can comprise a lifting surface which can sufficiently lift the cutting member over the locking surface. In addition to or in lieu of the above, various portions of the staple cartridge 4500 can be comprised of materials having different colors. In such embodiments, a surgeon may be able to visually identify when an unfired and/or fired staple cartridge is present in the staple cartridge

channel **4530**. In at least one such embodiment, the outer layer **4511** of the cartridge body **4510** may have a first color, the cartridge pan **4580** may have a second color, and the staple cartridge channel **4530** may have a third color. In the event that the surgeon sees the first color, the surgeon may know that an unfired cartridge **4500** is present in the staple cartridge channel **4530**; in the event that the surgeon sees the second color, the surgeon may know that a fired cartridge **4500** is present in the staple cartridge channel **4530** and that the remaining cartridge pan **4580** needs to be removed; and in the event that the surgeon sees the third color, the surgeon may know that no portion of a staple cartridge **4500** remains within the cartridge channel **4530**.

In various embodiments, referring now to FIG. **152**, a staple cartridge, such as staple cartridge **4600**, for example, can comprise a compressible, implantable cartridge body **4610** and a plurality of staples **4620** positioned therein. The cartridge body **4610** can comprise an outer layer **4611** and an inner layer **4612**. In certain embodiments, the inner layer **4612** can comprise a plurality of pockets, such as pockets, or cavities, **4615**, for example, defined therein which can facilitate the collapse of the cartridge body **4610**. In at least one such embodiment, the inner layer **4612** can comprise a corrugated, or honeycomb-configured, lattice which can be configured to withstand a compressive force, or pressure, as long as the compressive force, or pressure, does not exceed a certain threshold value. When the threshold value has not been exceeded, the inner layer **4612** can deform at a linear, or at least substantially linear, rate with respect to the compressive force, or pressure, being applied. After the compressive force, or pressure, has exceeded the threshold value, the inner layer **4612** can suddenly succumb to large deflections and collapse, or buckle, as a result of the compressive load. In various embodiments, the lattice of the inner layer **4612** can be comprised of a plurality of sub-layers **4612***a* which can be connected together. In at least one embodiment, each sub-layer **4612***a* can comprise a plurality of alternating furrows and ridges, or waves, which can be aligned with the alternating furrows and ridges of an adjacent sub-layer **4612***a*. In at least one such embodiment, the furrows of a first sub-layer **4612***a* can be positioned adjacent to the ridges of a second sub-layer **4612***a* and, similarly, the ridges of the first sub-layer **4612***a* can be positioned adjacent to the furrows of the second sub-layer **4612***a*. In various embodiments, the adjacent sub-layers **4612***a* can be adhered to one another and/or the outer layer **4611** by at least one adhesive, such as fibrin and/or protein hydrogel, for example. FIG. **153** illustrates the staple cartridge **4600** after the cartridge body **4610** has been collapsed and the staples **4620** have been deformed in order to capture and hold tissue T against the cartridge body **4610**.

In various embodiments, referring now to FIGS. **154-156**, a staple cartridge, such as staple cartridge **4700**, for example, can comprise a compressible, implantable cartridge body **4710** and a plurality of staples **4720** positioned within the cartridge body **4710**. Similar to the above, the cartridge body **4710** can comprise an outer layer **4711** and an inner layer **4712**, wherein the inner layer **4712** can comprise a plurality of sub-layers **4712***a*. Also similar to the above, each sub-layer **4712***a* can comprise alternating furrows **4717** and ridges **4718** which can be aligned with one another to define pockets, or cavities, **4715** therebetween. In at least one such embodiment, the furrows **4717** and/or the ridges **4718** can extend along axes which are parallel to one another and/or parallel to a longitudinal axis **4709**. In various embodiments, the staples **4720** can be aligned in a plurality of staple rows which can extend along axes which are parallel to one another and/or parallel to the longitudinal axis **4709**. In various alternative embodiments, referring again to FIGS. **152** and **153**, the staples **4620** contained in the cartridge body **4600** can extend along axes which are traverse or perpendicular with respect to the axes defined by the furrows and ridges of the sub-layers **4612***a*. Referring again to FIGS. **154-156**, the staples **4720** can extend through the furrows **4717** and the ridges **4718** wherein friction forces between the staples **4720** and the sub-layers **4712***a* can hold the staples **4720** within the cartridge body **4710**. In certain embodiments, the plurality of sub-layers **4712***a* can be comprised of a buttress material and/or plastic material, such as polydioxanone (PDS) and/or polyglycolic acid (PGA), for example, which can be configured to hold the staples **4720** in an upright orientation, for example, and/or hold the staples **4720** in alignment with respect to each other as illustrated in FIGS. **154** and **155**. FIG. **156** illustrates the staple cartridge **4700** after the cartridge body **4710** has been collapsed and the staples **4720** have been deformed in order to capture and hold tissue T against the cartridge body **4710**.

In various embodiments, referring again to FIGS. **154-156**, the cartridge body **4710** can resiliently or elastically collapse when it is compressed. In at least one such embodiment, the waves formed within each sub-layer **4712***a* by the furrows **4717** and the ridges **4718** can be flattened, or at least substantially flattened, when the cartridge body **4710** is compressed which can collapse, or at least substantially collapse, the cavities **4715** defined therebetween. In various circumstances, the cartridge body **4710**, or at least portions of the cartridge body **4710**, can resiliently or elastically re-expand after the compressive force, or pressure, has been removed from the cartridge body **4710**. In at least one such embodiment, the connections between the furrows **4717** and the ridges **4718** of adjacent sub-layers **4712***a* can remain intact, or at least substantially intact, when the cartridge body **4710** is compressed such that, after the compression force has been removed from the cartridge body **4710**, the sub-layers **4712***a* can bias themselves away from each other and, as a result, at least partially re-expand the cartridge body **4710**. In certain embodiments, the cartridge body **4710** can be plastically deformed, or crushed, when it is compressed and, as a result, the cartridge body **4710** may not re-expand after the compressive force, or pressure, has been removed from the cartridge body **4710**. In certain embodiments, referring now to FIG. **157**, a staple cartridge, such as staple cartridge **4800**, for example, can comprise a crushable cartridge body **4810** comprising an outer layer **4811** and an inner layer **4812**, wherein the inner layer **4812** can comprise a corrugated, honeycomb-configured, lattice having a plurality of pockets, or cavities, **4815** defined therein. In various embodiments, the walls defining the lattice of inner layer **4812** can comprise one or more weakened, or thin, cross-sections **4819** which can be configured to allow the walls defining the lattice to break when the cartridge body **4810** is compressed. In such circumstances, the cartridge body **4810** can be crushed when the staple cartridge **4800** is implanted.

In various embodiments, referring now to FIGS. **158-160**, a staple cartridge, such as staple cartridge **4900**, for example, can comprise a cartridge body **4910** comprising an outer layer **4911** and a plurality of collapsible elements **4912** positioned intermediate top and bottom portions of the outer layer **4911**, for example. Referring primarily to FIGS. **158** and **159**, the staple cartridge **4900** can further comprise a plurality of staples **4920**, wherein each staple **4920** can be positioned in a collapsible element **4912**. More particularly, each collapsible element **4912** can comprise a first portion **4912***a*, a second portion **4012***b*, and a third portion **4012***c*

which can co-operate to define a cavity **4915** therein which is configured to receive a staple **4920**. In use, further to the above, the staple cartridge **4900** can be positioned within a staple cartridge channel and a compressive force can be applied to the tissue contacting surface **4919** in order to compress the cartridge body **4910**. As the tissue contacting surface **4919** is moved downwardly, the collapsible elements **4912** can collapse. In such circumstances, the second portion **4912***b* of each collapsible element **4912** can collapse into a corresponding first portion **4912***a* and, similarly, the third portion **4912***c* of each collapsible element **4912** can collapse into a corresponding second portion **4912***b*. As the cartridge body **4910** is compressed and the collapsible elements **4912** are collapsed, the staples **4920** positioned within the collapsible elements **4912** can be deformed, as illustrated in FIG. **160**. In various embodiments, the second portion **4912***b* of each collapsible element **4912** can be frictionally engaged and/or press-fit within a corresponding first portion **4912***a* such that, once the compressive force applied to the collapsible element **4912** exceeds the retention force retaining the first portion **4912***a* and the second portion **4912***b* in their extended position (FIG. **159**), the first portion **4912***a* and the second portion **4912***b* can begin to slide relative to one another. Similarly, the third portion **4912***c* of each collapsible element **4912** can be frictionally engaged and/or press-fit within a corresponding second portion **4912***b* such that, once the compressive force applied to the collapsible element **4912** exceeds the retention force retaining the second portion **4912***b* and the third portion **4912***c* in their extended position (FIG. **159**), the second portion **4912***b* and the third portion **4912***c* can begin to slide relative to one another.

In many embodiments described herein, a staple cartridge can comprise a plurality of staples therein. In various embodiments, such staples can be comprised of a metal wire deformed into a substantially U-shaped configuration having two staple legs. Other embodiments are envisioned in which staples can comprise different configurations such as two or more wires that have been joined together having three or more staple legs. In various embodiments, the wire, or wires, used to form the staples can comprise a round, or at least substantially round, cross-section. In at least one embodiment, the staple wires can comprise any other suitable cross-section, such as square and/or rectangular cross-sections, for example. In certain embodiments, the staples can be comprised of plastic wires. In at least one embodiment, the staples can be comprised of plastic-coated metal wires. In various embodiments, a cartridge can comprise any suitable type of fastener in addition to or in lieu of staples. In at least one such embodiment, such a fastener can comprise pivotable arms which are folded when engaged by an anvil. In certain embodiments, two-part fasteners could be utilized. In at least one such embodiment, a staple cartridge can comprise a plurality of first fastener portions and an anvil can comprise a plurality of second fastener portions which are connected to the first fastener portions when the anvil is compressed against the staple cartridge. In certain embodiments, as described above, a sled or driver can be advanced within a staple cartridge in order to complete the forming process of the staples. In certain embodiments, a sled or driver can be advanced within an anvil in order to move one or more forming members downwardly into engagement with the opposing staple cartridge and the staples, or fasteners, positioned therein.

In various embodiments described herein, a staple cartridge can comprise four rows of staples stored therein. In at least one embodiment, the four staple rows can be arranged in two inner staple rows and two outer staple rows. In at least one such embodiment, an inner staple row and an outer staple row can be positioned on a first side of a cutting member, or knife, slot within the staple cartridge and, similarly, an inner staple row and an outer staple row can be positioned on a second side of the cutting member, or knife, slot. In certain embodiments, a staple cartridge may not comprise a cutting member slot; however, such a staple cartridge may comprise a designated portion configured to be incised by a cutting member in lieu of a staple cartridge slot. In various embodiments, the inner staple rows can be arranged within the staple cartridge such that they are equally, or at least substantially equally, spaced from the cutting member slot. Similarly, the outer staple rows can be arranged within the staple cartridge such that they are equally, or at least substantially equally, spaced from the cutting member slot. In various embodiments, a staple cartridge can comprise more than or less than four rows of staples stored within a staple cartridge. In at least one embodiment, a staple cartridge can comprise six rows of staples. In at least one such embodiment, the staple cartridge can comprise three rows of staples on a first side of a cutting member slot and three rows of staples on a second side of the cutting member slot. In certain embodiments, a staple cartridge may comprise an odd number of staple rows. For example, a staple cartridge may comprise two rows of staples on a first side of a cutting member slot and three rows of staples on a second side of the cutting member slot. In various embodiments, the staple rows can comprise staples having the same, or at least substantially the same, unformed staple height. In certain other embodiments, one or more of the staple rows can comprise staples having a different unformed staple height than the other staples. In at least one such embodiment, the staples on a first side of a cutting member slot may have a first unformed height and the staples on a second side of a cutting member slot may have a second unformed height which is different than the first height, for example.

In various embodiments, referring now to FIGS. **161**A-**161**D, an end effector of a surgical stapler can comprise a cartridge attachment portion, such as staple cartridge channel **5030**, for example, a fastener cartridge removably positioned in the staple cartridge channel **5030**, such as staple cartridge **5000**, for example, and a jaw **5040** positioned opposite the staple cartridge **5000** and the staple cartridge channel **5030**. The staple cartridge **5000** can comprise a compressible body **5010** and a plurality of staples **5020**, and/or any other suitable fasteners, at least partially positioned in the compressible body **5010**. In at least one such embodiment, each staple **5020** can comprise a base **5022** and, in addition, legs **5021** extending upwardly from the base **5022**, wherein at least a portion of the legs **5021** can be embedded in the cartridge body **5010**. In various embodiments, the compressible body **5010** can comprise a top, or tissue-contacting, surface **5019** and a bottom surface **5018**, wherein the bottom surface **5018** can be positioned against and supported by a support surface **5031** of the staple cartridge channel **5030**. Similar to the above, the support surface **5031** can comprise a plurality of support slots **5032** (FIG. **161**D), for example, defined therein which can be configured to receive and support the bases **5022** of the staples **5020**. In various embodiments, the end effector of the surgical stapler can further comprise a retention matrix, such as retention matrix **5050**, for example, which can be configured to engage the staples **5020** and capture tissue therebetween. In at least one such embodiment, the retention matrix **5050** can be removably mounted to the jaw **5040**. In

use, once the staple cartridge **5000** has been positioned within the staple cartridge channel **5030**, the jaw **5040**, and the retention matrix **5050** attached thereto, can be moved toward the staple cartridge **5000** and the staple cartridge channel **5030**. In at least one embodiment, the jaw **5040** can be moved downwardly along an axis **5099** such that the jaw **5040** and the staple cartridge channel **5030** remain parallel, or at least substantially parallel, to one another as the jaw **5040** is closed. More particularly, in at least one such embodiment, the jaw **5040** can be closed in a manner such that a tissue-contacting surface **5051** of the retention matrix **5050** is parallel, or at least substantially parallel, to the tissue-contacting surface **5019** of the staple cartridge **5000** as the jaw **5040** is moved toward the staple cartridge **5000**.

In various embodiments, referring now to FIG. **161**A, the retention matrix **5050** can be detachably secured to the jaw **5040** such that there is little, if any, relative movement between the retention matrix **5050** and the jaw **5040** when the retention matrix **5050** is attached to the jaw **5040**. In at least one embodiment, the jaw **5040** can comprise one or more retention features which can be configured to hold the retention matrix **5050** in position. In at least one such embodiment, the retention matrix **5050** can be snap-fit and/or press-fit into the jaw **5040**. In certain embodiments, the retention matrix **5050** can be adhered to the jaw **5040** utilizing at least one adhesive. In any event, the jaw **5040** can be moved into a position in which the retention matrix **5050** is in contact with the tissue T and the tissue T is positioned against the tissue-contacting surface **5019** of the staple cartridge **5000**. When the tissue T is positioned against the staple cartridge **5000** by the jaw **5040**, the compressible body **5010** of the staple cartridge **5000** may or may not be compressed by the jaw **5040**. In either circumstance, in various embodiments, the legs **5021** of the staples **5200** may not protrude through the tissue-contacting surface **5019** of the staple cartridge **5000** as illustrated in FIG. **161**A. Furthermore, as also illustrated in FIG. **161**A, the jaw **5040** can hold the tissue T against the compressible body **5010** without engaging the retention matrix **5050** with the staples **5020**. Such embodiments can permit a surgeon to open and close the jaw **5040** multiple times in order to obtain a desired positioning of the end effector within a surgical site, for example, without damaging the tissue T. Other embodiments are envisioned, however, where the staple tips **5023** can protrude from the tissue-contacting surface **5019** prior to the cartridge body **5010** being compressed by the anvil **5040**. Once the end effector has been suitably positioned, referring now to FIG. **161**B, the jaw **5040** can be moved downwardly toward the staple cartridge channel **5030** such that the compressible body **5010** is compressed by the anvil **5040** and such that the tissue-contacting surface **5019** is pushed downwardly relative to the staples **5020**. As the tissue-contacting surface **5019** is pushed downwardly, the tips **5023** of the staple legs **5021** can pierce the tissue-contacting surface **5019** and pierce at least a portion of the tissue T. In such circumstances, the retention matrix **5050** may be positioned above the staples **5020** such that the retention apertures **5052** of retention matrix **5050** are aligned, or at least substantially aligned, with the tips **5023** of the staple legs **5021**.

As the retention matrix **5050** is pushed downwardly along the axis **5099**, referring now to FIG. **161**C, the staple legs **5021** of staples **5020** can enter into the retention apertures **5052**. In various embodiments, the staple legs **5021** can engage the side walls of the retention apertures **5052**. In certain embodiments, as described in greater detail below, the retention matrix **5050** can comprise one or more retention members extending into and/or around the retention apertures **5052** which can engage the staple legs **5021**. In either event, the staple legs **5021** can be retained in the retention apertures **5052**. In various circumstances, the tips **5023** of the staple legs **5021** can enter into the retention apertures **5052** and can frictionally engage the retention members and/or the side walls of the apertures **5052**. As the retention matrix **5050** is pushed toward the bases **5022** of the staples **5020**, the staple legs **5021** can slide relative to the side walls and/or the retention members. As a result of the above, sliding friction forces can be created between the staple legs **5021** and the retention matrix **5050** wherein such sliding friction forces can resist the insertion of the retention matrix **5050** onto the staples **5020**. In various embodiments, the sliding friction forces between the retention matrix **5050** and the staples **5020** can be constant, or at least substantially constant, as the retention matrix **5050** is slid downwardly along the staple legs **5021** of the staples **5020**. In certain embodiments, the sliding friction forces may increase and/or decrease as the retention matrix **5050** is slid downwardly along the staple legs **5021** owing to variations in geometry of the staple legs **5021**, the retention apertures **5052**, and/or the retention members extending into and/or around the retention apertures **5052**, for example. In various embodiments, the insertion of the retention matrix **5050** onto the staples **5020** can also be resisted by the compressible body **5010** of the staple cartridge **5000**. More particularly, the compressible body **5010** can be comprised of an elastic material, for example, which can apply a resistive force to the retention matrix **5050** which increases as the distance in which the compressible body **5010** is compressed increases. In at least one such embodiment, the increase in the resistive force generated by the cartridge body **5010** can be linearly proportional, or at least substantially linearly proportional, with respect to the distance in which the cartridge body **5010** is compressed. In certain embodiments, the increase in the resistive force generated by the cartridge body **5010** can be geometrically proportional with respect to the distance in which the cartridge body **5010** is compressed.

In various embodiments, further to the above, a sufficient firing force can be applied to the jaw **5040** and the retention matrix **5050** in order to overcome the resistive and friction forces described above. In use, the retention matrix **5050** can be seated to any suitable depth with respect to the staples **5020**. In at least one embodiment, the retention matrix **5050** can be seated to a depth with respect to the bases **5022** of the staples **5020** in order to secure two or more layers of tissue together and generate compressive forces, or pressure, within the tissue. In various circumstances, the system comprising the retention matrix **5050** and the staples **5020** can allow a surgeon to select the amount of compressive forces, or pressure, that is applied the tissue by selecting the depth in which the retention matrix **5050** is seated. For example, the retention matrix **5050** can be pushed downwardly toward the staple bases **5022** of the staples **5020** until the retention matrix **5050** is seated a certain depth **5011** away from the bottom of the support slots **5032**, wherein a shorter depth **5011** can result in higher compressive forces, or pressure, being applied to the tissue T than a taller depth **5011** which can result in lower compressive forces, or pressure, being applied to the tissue T. In various embodiments, the compressive forces, or pressures, applied to the tissue T can be linearly proportional, or at least substantially linearly proportional, to the depth **5011** in which the retention matrix **5050** is seated. In various circumstances, the compressive forces, or pressure, applied to the tissue T can depend on the thickness of the tissue T positioned between

the retention matrix **5050** and the staple cartridge **5020**. More particularly, for a given distance **5011**, the presence of thicker tissue T can result in higher compression forces, or pressure, than the presence of thinner tissue T.

In various circumstances, further to the above, a surgeon can adjust the depth in which the retention matrix **5050** is seated in order to account for thicker and/or thinner tissue positioned within the end effector and to apply a certain or predetermined pressure to the tissue T regardless of the tissue thickness. For example, the surgeon can seat the retention matrix **5050** to a shorter depth **5011** when fastening thinner tissue T or a taller depth **5011** when fastening thicker tissue T in order to arrive at the same, or at least substantially the same, compression pressure within the tissue. In certain embodiments, further to the above, a surgeon can selectively determine the amount of compressive pressure to apply to the tissue T positioned between the retention matrix **5050** and the staple cartridge **5010**. In various circumstances, a surgeon can engage the retention matrix **5050** with the staples **5020** and position the retention matrix **5050** a first distance away from the bases **5022** of the staples **5020** in order to apply a first compressive pressure to the tissue. The surgeon can alternatively position the retention matrix **5050** a second distance away from the bases **5022**, which is shorter than the first distance, in order to apply a second compressive pressure to the tissue which is greater than the first pressure. The surgeon can alternatively position the retention matrix **5050** a third distance away from the bases **5022**, which is shorter than the second distance, in order to apply a third compressive pressure to the tissue which is greater than the second pressure. In various embodiments, the fastening system comprising the retention matrix **5050** and the staples **5020** can be configured to permit a surgeon to apply a wide range of compressive pressures to the targeted tissue.

In various embodiments, referring now to FIG. **161**D, the staple legs **5021** can be inserted through the retention matrix **5050** such that the staple leg tips **5023** extend above the top surface of the retention matrix **5050**. In at least one embodiment, referring again to FIG. **161**C, the jaw **5040** can further comprise clearance apertures **5042** defined therein which can be configured to receive the staple leg tips **5023** as they pass through the retention apertures **5052** in the retention matrix **5050**. In at least one such embodiment, the clearance apertures **5042** can be aligned with the retention apertures **5052** such that the legs **5021** do not contact the jaw **5040**. In various embodiments, the clearance apertures **5042** can have a sufficient depth such that the staple legs **5021** do not contact the jaw **5040** regardless of the distance in which the retention matrix **5050** is seated. After the retention matrix **5050** has been engaged with the staples **5020** and seated to a desired position, referring now to FIG. **161**D, the staple cartridge channel **5030** and the jaw **5040** can be moved away from the tissue T. More particularly, the staple cartridge channel **5030** can be detached from the implanted staple cartridge **5000** and the anvil **5040** can be detached from the implanted retention matrix **5050**. As the jaw **5040** is moved away from the retention matrix **5050** and the staple supports **5032** are moved away from the staple bases **5022**, the distance **5011** between the retention matrix **5050** and the bottom of the bases **5022** can be maintained eventhough the jaw **5040** and the staple cartridge channel **5030** are no longer providing support thereto. In various embodiments, the static friction forces between the staple legs **5021** and the retention matrix **5050** can be sufficient to maintain the retention matrix **5050** in position despite a biasing force being applied to the retention matrix **5050** by the compressed cartridge body **5010** and/or the compressed tissue T. In at least one such embodiment, the cartridge body **5010** can be comprised of a resilient material which, when compressed, can apply an elastic biasing force to the retention matrix **5050** and the staples **5020** in a manner which tends to push the retention matrix **5050** and the staples **5020** apart, although such movement is opposed by the frictional engagement between the staple legs **5021** and the retention matrix **5050**.

In various embodiments, as described above, a retention matrix can comprise a plurality of retention apertures, wherein each retention aperture can be configured to receive a leg of a fastener therein. In at least one embodiment, referring now to FIG. **162**, a portion of a retention matrix **5150** is illustrated therein which can comprise a retention aperture **5152** defined by a perimeter **5156**. In various embodiments, the perimeter **5156** of the aperture **5152** can comprise a circular, or at least substantially circular, profile and/or any other suitable profile. In certain embodiments, the retention matrix **5150** can comprise one or more retention members, such as retention members **5153**, for example, which extend into the aperture **5152** and can be configured to engage a fastener leg when the fastener leg is inserted therethrough. In at least one such embodiment, each retention member **5153** can comprise a cantilever which extends inwardly toward a center axis **5159**, i.e., toward the center of the aperture **5152**. In various embodiments, each cantilever can comprise a first end which is attached to the retention matrix body **5158** and a second end which forms the perimeter **5156** of the retention aperture **5152**. In certain embodiments, the perimeter **5156** of a retention aperture **5152** can be defined by a first diameter, or width, and a fastener leg can be defined by a second diameter, or width, wherein the second diameter can be larger than the first diameter. In at least one such embodiment, the fastener leg can be configured to contact and deflect one or more of the retention members **5153** in order to increase the diameter of the retention aperture **5152** as the fastener leg is being inserted therethrough. In certain embodiments, further to the above, the fastener leg can define a perimeter which is larger than the perimeter **5156** of the retention aperture **5152** such that the fastener leg can expand the perimeter **5156** when the fastener leg is inserted therein.

In various embodiments, referring again to FIG. **162**, the aperture **5152** can be defined by the deformable members **5153**, wherein each deformable member **5153** can be configured to deflect relative to, or independently of, the other deformable members **5153**. In at least one such embodiment, adjacent deformable members **5153** can be separated by slots **5154** which can be configured to permit each deformable member **5153** to flex relative to the others. In certain embodiments, each slot **5154** can comprise a first end **5155** in the retention matrix body **5158**, a second end opening into the retention aperture **5152**, and a constant, or at least substantially constant, width extending between the first end **5155** and the second end. In various other embodiments, the width of each slot **5154** may not be constant and each slot **5154** may increase and/or decrease in width between the first and second ends thereof. In certain embodiments, the first ends **5155** of the slots **5154** can comprise an enlarged portion, such as a circular portion, which can provide, one, strain relief to the bases of the deformable members **5153** attached to the retention matrix body **5158** and, two, means for increasing the flexibility of the deformable members **5153**. In various embodiments, the geometry of the deformable members **5153**, and/or slots **5154**, can be selected so as to provide the deformable members **5153** with a desired

flexibility. In certain embodiments, for example, the slots **5154** can be lengthened in order to create longer deformable members **5153** which can be more flexible than deformable members **5153** having a shorter length. In at least one embodiment, the width of each deformable member **5153** can be selected so as to provide a desired flexibility thereof. More particularly, deformable members having a thinner width can be more flexible than deformable members having a thicker width. In certain embodiments, referring again to FIG. **162**, the first ends of the cantilevers of deformable members **5153** attached to the retention matrix body **5158** can be wider than the second ends of the cantilevers. In at least one such embodiment, the cantilevers can be tapered in a linear, or at least substantially linear, manner between the first and second ends thereof.

In various embodiments, referring again to FIG. **162**, the retention matrix body **5158** can comprise a flat, or at least substantially flat, sheet of material having a tissue-contacting surface **5151** and a top surface **5157**. In at least one such embodiment, the tissue-contacting surface **5151** and the top surface **5157** can be parallel, or at least substantially parallel, to one another. In various embodiments, each deformable member **5153** can comprise a first portion **5153***a* and a second portion **5153***b*, wherein the first portion **5153***a* can extend in a first direction and the second portion **5153***b* can extend in a different, or second, direction. In at least one such embodiment, the retention matrix body **5158** can define a plane and the first portions **5153***a* of the deformable members **5153** can lie within such a plane. In various embodiments, the second portions **5153***b* of the deformable members **5153** can extend at an angle relative to the first portions **5153***a*. In at least one such embodiment, the second portions **5153***b* can extend in directions which are pointed away from the top surface **5157** of the retention matrix body **5158** and, in certain embodiments, the second portions **5153***b* can converge toward the central axis **5159** of the retention aperture **5152**. In any event, in various embodiments, the second portions **5153***b* can be configured to deflect away from the central axis **5159** when the fastener leg is inserted therethrough. In embodiments where a staple leg **5021** of a staple **5020** is inserted into a retention aperture **5152**, the deformable members **5153** can deform in a direction which is generally away from the bases **5122** of the staples **5120**. In certain embodiments, as a result, the deformable members **5153** can deflect in a general direction which is the same as, or at least substantially the same as, the direction in which the staple legs **5021** are being inserted.

In various embodiments, referring again to FIG. **162**, the second portions **5153***b* of the deformable members **5153** can each comprise a sharp tip, for example, which can be configured to slide against a staple leg **5021** as the staple leg **5021** is inserted therein. The sharp tips of the second portions **5153***b* can also be configured to bite into the staple leg **5021** in the event that the staple leg **5021** were to be pulled in the opposite direction, i.e., in a direction which would remove the staple leg **5021** from the retention aperture **5052**. In certain circumstances, the second portions **5153***b* can be inclined at an angle relative to the side of the staple leg **5021** which is greater than 90 degrees and, as a result, the second portions **5153***b* may dig, or burrow, into the side of the staple leg **5021** when the staple leg **5021** experiences a force which tends to withdraw the staple leg **5021** from the retention aperture **5052**. In certain embodiments, the staple legs **5021** can comprise indentations and/or concavities, such as microindentations, for example, in the surfaces thereof which can be configured to receive the tips of the deformable members **5053**, for example, therein. In at least one such embodiment, the tips of the deformable members **5053** can catch in and burrow into the indentations in the staple legs **5021** when a withdrawing force is applied to the staple legs **5021**. In various embodiments, as a result of the burrowing of the second portions **5153***b* into the staple legs **5021**, forces acting to remove the staple legs **5021** from the retention apertures **5022** may only seat the second portions **5153***b* deeper into the staple legs **5021** and increase the force required to remove the staple legs **5021**. Furthermore, owing to the upward inclination of the second portions **5153***b*, in at least one embodiment, the second portions **5153***b* can be more permissive to the insertion of a staple leg **5021** within a retention aperture **5152** and more resistive to withdrawal of the staple leg **5021**. In at least one embodiment, as a result, the force required to insert a staple leg **5021** into a retention aperture **5022** may be less than the force required to remove the staple leg **5021** from the retention aperture **5022**. In various embodiments, the force needed to remove the staple leg **5021** from the retention aperture **5022** can be approximately 50 percent greater than the force needed to insert the staple leg **5021** into the retention aperture **5022**, for example. In various other embodiments, the force needed to remove the staple leg **5021** may between approximately 10 percent and approximately 100 percent greater than the force needed to insert the staple leg **5021**, for example. In certain embodiments, the force needed to remove the staple leg **5021** may be approximately 100 percent, approximately 150 percent, approximately 200 percent, and/or greater than approximately 200 percent larger than the force needed to insert the staple leg **5021**, for example.

In certain embodiments, referring again to FIG. **162**, the second portions **5153***b* can be arranged circumferentially around the aperture **5152** and can define a pocket therebetween. More particularly, the second portions **5153***b* can define a pocket **5160** which can be configured to receive the tip of the fastener leg when it is inserted into the retention aperture **5152**. In various embodiments, the second portions **5153***b* of the deformable members **5153** can comprise an annular, or an at least substantially annular, contour which can co-operatively define an annular, or at least substantially annular, profile of the pocket **1560**, for example. In at least one such embodiment, the second portions **5153***b* can define a conical or frustoconical pocket. In various embodiments, the pocket can be defined by a suitable number of deformable members, such as four deformable members **5153** (FIG. **162**), six deformable members **5153** (FIG. **163**), or eight deformable members **5153** (FIG. **164**), for example. In certain embodiments, referring now to FIG. **165**, the deformable members of a retention matrix, such as retention matrix **5250**, for example, can form a pyramidal shape, or an at least substantially pyramidal shape, for example. In various embodiments, a retention matrix **5250** can comprise a plurality of retention apertures, such as retention aperture **5252**, for example, which can be defined by a perimeter **5256**. In various embodiments, the perimeter **5256** can comprise a polygonal, or at least substantially polygonal, profile and/or any other suitable profile. In certain embodiments, the retention matrix **5250** can comprise one or more retention members, such as retention members **5253**, for example, which extend into the aperture **5252** and can be configured to engage a fastener leg when the fastener leg is inserted therethrough. In at least one such embodiment, each retention member **5253** can comprise a cantilever which extends inwardly toward a center axis **5259**, i.e., toward the center of the aperture **5252**. In various embodiments, each cantilever can comprise a first end which is attached to the

retention matrix body **5258** and a second end which forms the perimeter **5256** of the retention aperture **5252**. In certain embodiments, the perimeter **5256** of a retention aperture **5252** can be defined by a first diameter, or width, and a fastener leg can be defined by a second diameter, or width, wherein the second diameter can be larger than the first diameter. In at least one such embodiment, the fastener leg can be configured to contact and deflect one or more of the retention members **5253** in order to increase the diameter of the retention aperture **5252** as the fastener leg is being inserted therethrough. In certain embodiments, further to the above, the fastener leg can define a perimeter which is larger than the perimeter **5256** of the retention aperture **5252** such that the fastener leg can expand the perimeter **5256** when the fastener leg is inserted therein.

In various embodiments, referring again to FIG. **165**, the aperture **5252** can be defined by the deformable members **5253**, wherein each deformable member **5253** can be configured to deflect relative to, or independently of, the other deformable members **5253**. In at least one such embodiment, adjacent deformable members **5253** can be separated by slots **5254** which can be configured to permit each deformable member **5253** to flex relative to the others. In various embodiments, the retention matrix body **5258** can comprise a flat, or at least substantially flat, sheet of material having a tissue-contacting surface **5251** and a top surface **5257**. In at least one such embodiment, the tissue-contacting surface **5251** and the top surface **5257** can be parallel, or at least substantially parallel, to one another. In various embodiments, each deformable member **5253** can comprise a first portion **5253***a* and a second portion **5253***b*, wherein the first portion **5253***a* can extend in a first direction and the second portion **5253***b* can extend in a different, or second, direction. In at least one such embodiment, the retention matrix body **5258** can define a plane and the first portions **5253***a* of the deformable members **5253** can lie within such a plane. In various embodiments, the second portions **5253***b* of the deformable members **5253** can extend at an angle relative to the first portions **5253***a*. In at least one such embodiment, the second portions **5253***b* can extend in directions which are pointed away from the top surface **5257** of the retention matrix body **5258** and, in certain embodiments, the second portions **5253***b* can converge toward the central axis **5259** of the retention aperture **5252**. In any event, in various embodiments, the second portions **5253***b* can be configured to deflect away from the central axis **5259** when the fastener leg is inserted therethrough. In certain embodiments, referring again to FIG. **165**, the second portions **5253***b* can be arranged circumferentially around the aperture **5252** and can define a pocket therebetween. More particularly, the second portions **5253***b* can define a pocket which can be configured to receive the tip of the fastener leg when it is inserted into the retention aperture **5252**. In various embodiments, the second portions **5253***b* of the deformable members **5253** can define a polygonal, or an at least substantially polygonal, pocket, for example. In various embodiments, the pocket can be defined by a suitable number of deformable members, such as four deformable members **5253** (FIG. **165**) which can define a square, six deformable members **5253** (FIG. **166**) which can define a hexagon, or eight deformable members **5253** (FIG. **167**) which can define an octagon, for example.

In various embodiments, referring now to FIG. **168**, a retention matrix, such as retention matrix **5350**, for example, can be formed from a flat, or an at least substantially flat, sheet of material such as titanium and/or stainless steel, for example. In at least one such embodiment, a plurality of apertures **5352** can be formed in the body **5358** of the retention matrix **5350** by one or more stamping processes. The sheet of material can be positioned in a stamping die which, when actuated, can punch out certain portions of the material in order to form slots **5354**, apertures **5355** of slots **5354**, and/or the perimeter **5356** of the retention aperture **5352**, for example. The stamping die can also be configured to bend the deformable members **5353** in a suitable configuration. In at least one such embodiment, the stamping die can deform the second portions **5353***b* upwardly relative to the first portions **5353***a* along a crease line **5353***c*. In various embodiments, referring now to FIG. **169**, a retention matrix, such as retention matrix **5450**, for example, can comprise a plurality of retention apertures **5452**. Similar to the above, the perimeter **5456** of each retention aperture **5452** can be defined by a plurality of deformable members **5453** separated by slots, or slits, **5454**. In at least one such embodiment, the entirety of each deformable member **5453** can be bent upwardly wherein the free ends of the cantilevers comprising the deformable members **5453** can define the perimeter **5456**. In various embodiments, the retention matrix **5450** can comprise a plurality of apertures **5455** surrounding, or at least substantially surrounding, the retention aperture **5452**. In at least one such embodiment, the apertures **5455** can be arranged in a circular array surrounding or enclosing a perimeter defined by the fixed ends of the cantilevers of the deformable members **5453**. In certain embodiments, each aperture **5455** can comprise a circular, or at least substantially circular, perimeter and/or any other suitable perimeter. In use, the apertures **5455** can provide, one, strain relief to the bases of the deformable members **5453** attached to the retention matrix body **5458** and, two, means for increasing the flexibility of the deformable members **5453**. In various embodiments, larger apertures **5455** can provide more flexibility to the deformable members **5453** as compared to smaller apertures **5455**. Furthermore, apertures **5455** which are closer to the deformable members **5453** can provide more flexibility as compared to apertures **5455** which are further away.

In various embodiments, referring now to FIG. **170**, a retention matrix, such as retention matrix **5550**, for example, can comprise a plurality of retention apertures **5552**. Each retention aperture **5552** can comprise an elongate slot **5554** having enlarged circular, or at least substantially circular, ends **5555**. In at least one such embodiment, the ends **5555** can be defined by a diameter which is wider than the slot **5554**. In certain embodiments, the elongate slot **5554** and the ends **5555** can positioned along, and/or centered along, a longitudinal axis **5559**. In various embodiments, the slot **5554** and the ends **5555** can define two opposing tabs **5553** which can be configured to engage a leg of a fastener and deflect as the fastener leg is inserted therethrough. In at least one embodiment, ends **5555** having a larger perimeter, or diameter, can define longer tabs **5553** which can be more flexible than tabs **5553** defined by ends **5555** having a smaller perimeter, or diameter. In various embodiments, the ends **5555** can have the same perimeter and diameter and, in at least one such embodiment, each tab **5553** can be symmetrical about an axis which is perpendicular, or at least substantially perpendicular, to the longitudinal axis **5559**. Alternatively, the ends **5555** can have different perimeters and/or diameters wherein, in at least one embodiment, each tab **5553** may not be symmetrical about its axis. In at least one such alternative embodiment, the tabs **5553** may twist about their axes as the fastener leg is inserted through the retention aperture **5552**. In various embodiments, referring now to FIG. **171**, a retention matrix, such as retention matrix

5650, for example, can comprise a plurality of retention apertures 5652. Each retention aperture 5652 can comprise an elongate slot 5654 comprising circular, or at least substantially circular, ends 5655. In at least one such embodiment, the elongate slot 5654 and the ends 5655 can be positioned along, and/or centered along, a longitudinal axis 5659. In various embodiments, each end 5655 can be defined by a diameter which is the same as, or at least substantially the same as, the width of the slot 5654.

In various embodiments, referring now to FIG. 172, a retention matrix, such as retention matrix 5750, for example, can comprise a plurality of retention apertures 5752. Each retention aperture 5752 can comprise a plurality of slots, such as slots 5754, for example, having enlarged ends 5755. In at least one such embodiment, the slots 5754 and the ends 5755 can be positioned along and/or centered along longitudinal axes 5759. In various embodiments, the axes 5759 can extend in directions which are perpendicular or transverse to one another. In certain embodiments, the slots 5754 and the ends 5755 can define four tabs 5753, for example, which can be configured to engage a fastener leg and deflect when the fastener leg is inserted through the retention aperture 5752. In at least one embodiment, each tab 5753 can comprise a triangular, or at least substantially triangular, configuration, such as an equilateral triangle, for example. In various other embodiments, referring now to FIG. 173, a retention matrix, such as retention matrix 5850, for example, can comprise a plurality of retention apertures 5852. Each retention aperture 5852 can comprise a plurality of slots, such as slots 5854, for example, having ends 5855, wherein the slots 5854 and the ends 5855 can be positioned along and/or centered along longitudinal axes 5859. In various embodiments, the axes 5859 can extend in directions which are perpendicular or transverse to one another. In certain embodiments, the slots 5854 and the ends 5855 can define tabs 5853 which can be configured to engage a fastener leg and deflect when the fastener leg is inserted through the retention aperture 5852. In at least one embodiment, each tab 5853 can comprise an arcuate profile. More particularly, each tab 5853 can comprise a curved end, as opposed to a pointed end depicted in FIG. 170, which can be configured to contact the fastener leg.

In various embodiments, referring now to FIG. 174, a retention matrix, such as retention matrix 5950, for example, can comprise a plurality of retention apertures 5952. Each retention aperture 5952 can comprise a plurality of slots, such as slots 5954, for example, wherein each slot 5954 can extend along, and/or can be centered along, an axis 5959. In various embodiments, the axes 5959 can be transverse to each other and, in at least one such embodiment, the axes 5959 can be arranged such that all of the axes 5959 extend through a center of the retention aperture 5952 and are spaced equidistantly, or at least substantially equidistantly, from each other. In at least one embodiment, each slot 5954 can comprise an open end facing the center of the retention aperture 5952 and a second, or closed, end 5955 at the opposite end of the slot 5954. Similar to the above, the slots 5954 and the ends 5955 can define three tabs 5953, for example, which can be configured to engage a fastener leg and deflect when the fastener leg is inserted into the retention aperture 5952. In various embodiments, each tab 5953 can comprise an arcuate configuration extending between adjacent ends 5955 of the slots 5954. In various embodiments, referring now to FIG. 175, a retention matrix, such as retention matrix 6050, for example, can comprise a plurality of retention apertures 6052. Each retention aperture 6052 can comprise a tab 6053 which can be configured to engage a fastener leg and to deflect when the fastener leg is inserted into the retention aperture 6052. In at least one such embodiment, the tab 6053 can comprise a base fixed to the retention matrix body 6058 and a free end comprising an arcuate or curved profile 6056 which can be configured to contact the fastener leg. In certain embodiments, the fastener leg can be a staple leg comprised of a round wire wherein the curved profile 6056 can be configured to match, or at least substantially match, a curved outer surface of the round wire.

In various embodiments, referring again to FIG. 175, the retention matrix body 6058 can comprise a plurality of slots 6054 and apertures 6055 which can be configured to define the tab 6053 and various portions of the retention aperture 6052. In at least one embodiment, the tab 6053 can comprise a rectangular configuration comprising parallel, or at least substantially parallel, sides. In certain embodiments, referring now to FIG. 176, a retention matrix, such as retention matrix 6150, for example, can comprise a plurality of retention apertures 6152. Each retention aperture 6152 can comprise a tab 6153 which can be configured to engage a fastener leg and to deflect when the fastener leg is inserted into the retention aperture 6152. In at least one such embodiment, the tab 6153 can comprise a base fixed to the retention matrix body 6158 and a free end comprising an arcuate or curved profile 6156 which can be configured to contact the fastener leg. In various embodiments, the retention matrix body 6158 can comprise a plurality of slots 6154 and apertures 6155 which can be configured to define the tab 6153 and various portions of the retention aperture 6152. In at least one embodiment, the tab 6153 can comprise a tapered configuration comprising arcuate sides. In at least one such embodiment, the tab 6153 can taper geometrically with the base being wider than the free end, for example.

In various embodiments, as described above, a fastening system can comprise a plurality of staples comprising staple legs which are inserted through a plurality of retention apertures in a retention matrix. In certain embodiments, as described in greater detail below, the staples can be held in a first jaw and the retention matrix can be held in a second jaw, wherein at least one of the first jaw and the second jaw can be moved toward the other. In various circumstances, the staples positioned within the first jaw can be secured therein such that the staple legs are aligned with the retention apertures when the retention matrix is engaged with the staple legs. In certain embodiments, referring to FIGS. 177 and 178, a fastener system can comprise a staple cartridge 6200, for example, positioned in a first jaw of a surgical stapler and a retention matrix 6250, for example, positioned in a second jaw of the surgical stapler. Referring now to FIGS. 184 and 185, further to the above, the retention matrix 6250 can comprise a plurality of retention apertures 6252, wherein each retention aperture 6252 can comprise a perimeter 6256 defined by one or more deflectable members 6253. In at least one such embodiment, further to the above, the deflectable members 6253 defining each aperture 6252 can define a pocket 6201. In various embodiments, each pocket 6201 can comprise a curved and/or concave surface, for example, which can be configured to guide a tip of a staple leg into the aperture 6252 in the event that the staple leg is misaligned with the retention aperture 6252 and initially contacts the deflectable members 6253 and/or the tissue-contacting surface 6251, for example.

In various embodiments, further to the above, the fastening system can further comprise a plurality of staples 6220 comprising staple legs 6221 which can be inserted through the retention apertures 6252 in the retention matrix 6250. In at least one such embodiment, each staple 6220 can com-

prise a substantially U-shaped configuration, for example, comprising a base **6222** from which the staple legs **6221** can extend upwardly. In various embodiments, referring now to FIGS. **180** and **181**, the retention apertures **6252** in the retention matrix **6250** can be arranged in two parallel, or at least substantially parallel, longitudinal rows, for example, which can extend along, or parallel to, a longitudinal axis of the retention matrix. In certain embodiments, the retention apertures **6252** in a first row can be offset, or staggered, with respect to the retention apertures **6252** in a second row. In at least one such embodiment, each staple **6220** can comprise a first staple leg **6221** positioned in a retention aperture **6252** in the first row of and a second staple leg **6221** positioned in a retention aperture **6252** in the second row wherein, as a result, the bases **6222** can extend in a direction which is transverse to the longitudinal axis of the retention matrix **6250**. In at least one such embodiment, the staples **6220** can be parallel, or at least substantially parallel, to one another. More particularly, a base **6222***a* of a staple **6220***a* be parallel to, or at least substantially parallel to, a base **6222***b* of a staple **6220***b* which can be parallel to, or at least substantially parallel to, a base **6222***c* of a staple **6220***c*, for example. In at least one embodiment, the staple legs **6221***a* of staple **6220***a* can define a plane which is parallel to, or at least substantially parallel to, a plane defined by the staple legs **6221***b* of staple **6220***b* which can be parallel to, or at least substantially parallel to, a plane defined by the staple legs **6221** of staple **6220***c*, for example.

In various embodiments, referring now to FIGS. **177** and **179**, the staple cartridge **6200** can comprise a plurality of staples **6220** and, in addition, an alignment matrix **6260** comprising a plurality of alignment guides, such as slots, grooves, and/or apertures, for example, which can be configured to align the staples **6220**. In various circumstances, the alignment matrix **6260** can be configured such that the staple legs **6221** of the staples **6220** are aligned with the retention apertures **6252** in the retention matrix **6250** before the retention matrix **6250** is engaged with the staple legs **6221**. In various embodiments, referring now to FIGS. **182** and **183**, the alignment matrix **6260** can comprise a plurality of alignment apertures **6262** which can be configured to closely receive the staple legs **6221** of the staples **6220**. In at least one such embodiment, each staple **6220** can comprise a base **6222** and two staple legs **6221** extending from the base **6222** wherein the bases **6222** of the staples **6220** can extend around a bottom surface **6264** of the retention matrix **6260** and the staple legs **6221** can extend upwardly through the alignment apertures **6262**. In certain embodiments, each alignment aperture **6262** can be circular, or at least substantially circular, and can be defined by a diameter which is equal to or slightly larger than the diameter of the staple leg **6221** extending therethrough. In various embodiments, the alignment matrix **6260** can further comprise a plurality of raised members **6263** which can extend upwardly from the top surface **6261** of the alignment matrix **6260** and surround, or at least partially surround, the alignment apertures **6262**. In certain embodiments, the raised members **6263** can provide for longer alignment apertures **6262** wherein, in various circumstances, longer apertures **6262** can provide more control over the alignment of the staple legs **6221** than shorter apertures **6262**.

In use, in various embodiments, a first jaw supporting the staple cartridge **6200** can be positioned on one side of the tissue that is to be stapled and a second jaw supporting the retention matrix **6250** can be positioned on the other side of the tissue. Once the jaws have been suitably positioned relative to the tissue, in certain embodiments, the second jaw and the retention matrix **6250** can be moved toward the staple cartridge **6200**. As the staple legs **6221** are being inserted through the retention apertures **6252** of the retention matrix **6250**, in various embodiments, a tissue-contacting, or bottom, surface **6251** of the retention matrix **6250** can contact the tissue and press the tissue against the tissue-contacting, or top, surface **6261** of the alignment matrix **6260**. In various other embodiments, as described in greater detail further below, the staple cartridge **6200** can further comprise a compressible cartridge body positioned above the top surface **6261** of the alignment matrix **6260**, for example, which can contact the tissue. In certain embodiments, referring again to FIGS. **179** and **183**, the alignment matrix **6260** can further comprise one or more apertures **6203** defined therein which, when the alignment matrix **6260** is positioned against tissue, can be configured to receive a portion of the tissue therein. In embodiments where a compressible cartridge body is positioned above and/or against the alignment matrix **6260**, a portion of the compressible cartridge body can enter into the apertures **6203** when the cartridge body is compressed. Similarly, the retention matrix **6250** can comprise a plurality of apertures **6202** which can be configured to receive at least a portion of the tissue therein when the retention matrix **6250** is positioned against the tissue.

As the staple legs **6221** of the staples **6220** are inserted through the retention apertures **6252** of the retention matrix **6250**, further to the above, the tips of the staple legs **6221** may protrude upwardly from the top surface **6257** of the retention matrix **6250**. In various circumstances, as described above, the tips of the staple legs **6221** may remain unbent after they have been inserted through the retention apertures **6252**. In certain embodiments, referring now to FIGS. **186-189**, a fastening system comprising the staple cartridge **6200** and the retention matrix **6250** may further comprise a plurality of protective caps or covers, such as caps **6270**, for example, which can be assembled to the staple legs **6221** protruding above the retention matrix **6250**. In various embodiments, each cap **6270** can entirely, or at least partially, cover the sharp end of a staple leg **6221** such that the sharp end does not contact tissue positioned adjacent thereto. In at least one embodiment, referring now to FIG. **189**, each cap **6270** can comprise an aperture **6271** defined therein which can be configured to closely receive a tip of a staple leg **6221** therein. In various embodiments, the caps **6270** can be comprised of an elastomeric material, such as silicone, polyisoprene, sanoprene, and/or natural rubber, for example. In at least one embodiment, the aperture **6271** can comprise a perimeter or diameter which is smaller than the perimeter or diameter of the staple leg **6221** inserted therein. In at least one such embodiment, the aperture **6271** in the protective cap **6270** can expand in order to receive the staple leg **6221** therein. In various alternative embodiments, the caps **6270** may not comprise apertures and the tips of the staple legs **6221** can be configured to incise the caps **6270** as the legs **6221** are inserted therein. In any event, in various embodiments, each cap **6270** can be seated onto a staple leg **6221** until the base **6272** of the cap **6270** abuts, or is positioned adjacent to, the top surface **6257** of the retention matrix **6250**. In various circumstances, the caps **6270** can be configured such that they are seated snugly onto the tips of the staple legs **6221** such that they are not easily removed therefrom. In certain embodiments, each cap **6270** can comprise a conical, or at least substantially conical, outer surface, for example. In various embodiments, the caps **6270**

can comprise any suitable shape, such as shapes comprising a parabolic, or at least substantially parabolic, outer surface, for example.

In various embodiments, the fastener system described above, for example, could be deployed using the surgical stapler depicted in FIGS. **190-192**, for example. In various embodiments, the end effector can comprise a first jaw, or staple cartridge channel, **6230** which can be configured to support the staple cartridge **6200** therein and a second jaw **6240** which can be configured to support the retention matrix **6250** and the plurality of protective caps **6270**. Referring primarily to FIG. **190**, which illustrates the second jaw **6240** in an open configuration, the jaws **6230** and **6240** can be positioned relative to tissue T such that the tissue T is positioned intermediate the retention matrix **6250** and the staple cartridge **6200**. In various embodiments, as discussed above, the staple cartridge **6200** can further comprise a compressible cartridge body, such as cartridge body **6210**, for example, in which the staples **6220** and the alignment matrix **6260** can be positioned. In at least one such embodiment, the tissue T can be positioned against a top surface of the cartridge body **6210**. In certain embodiments, the second jaw **6240** can comprise a plurality of recesses, or apertures, **6245** configured to receive the plurality of protective caps **6270** and, in addition, one or more retention features, or retainers, which can be configured to hold the retention matrix **6250** in position over the caps **6270**. In at least one such embodiment, the retention matrix **6250** can be configured to retain the caps **6270** in the apertures **6245**. In various embodiments, referring now to FIG. **202**, each aperture **6245** can be configured to receive a portion of, or the entirety of, a cap **6270** therein. In certain embodiments, the apertures **6245** can be sufficiently sized and configured such that the caps **6270** can be secured therein by at least one of a press-fit and/or snap fit arrangement, for example. In some embodiments, at least one adhesive could be utilized to secure the caps **6270** in the apertures **6245**. In at least one such embodiment, such an adhesive could be selected such that caps **6270** can detach from the second jaw **6240** after the caps **6270** have been engaged with the staple legs **6221** and the second jaw **6240** is moved away from the implanted fastener assembly. In certain embodiments, referring now to FIG. **203**, the second jaw **6240** can further comprise at least one cover sheet **6246** which can be assembled to the second jaw **6240** and can extend over and retain the caps **6270** in the apertures **6245**. In at least one such embodiment, at least a portion of the cover sheet **6246** can be secured to the jaw **6240** utilizing at least one adhesive, for example. In use, in at least one embodiment, the cover sheet **6246** can be at least partially detached from the jaw **6240** before the end effector is inserted into a surgical site. In certain embodiments, the cover sheet **6246** can be comprised of an implantable material, such as PDS and/or PGA, for example, which can be incised by the staple legs **6221** as the staple legs **6221** emerge from the retention matrix **6250**. In at least one such embodiment, the cover sheet **6246** can be secured in the fastening system intermediate the covers **6270** and the retention matrix **6250**.

Further to the above, referring now to FIG. **191**, the jaw **6240** can be moved from an open position to a closed position in which the tissue T is positioned against the retention matrix **6250** and the cartridge body **6210**. In such a position, the retention matrix **6250** may not yet be engaged with the staples **6220**. In various embodiments, the jaw **6240** can be moved between its open position and its closed position by an actuator **6235**. In at least one such embodiment, the jaw **6240** can comprise a distal pin **6243** and a proximal pin **6244** extending therefrom, wherein the distal pin **6243** can slide vertically, or at least substantially vertically, within a distal slot **6233** defined in the cartridge channel **6230**, and wherein the proximal pin **6244** can slide vertically, or at least substantially vertically, within a proximal slot **6234** which is also defined in the staple cartridge channel **6230**. In use, the actuator **6235** can be retracted proximally in order to drive the pins **6243** and **6244** into the upper ends of their respective slots **6233** and **6234** as illustrated in FIG. **191**. In at least one such embodiment, the actuator **6235** can comprise a distal drive slot **6236** and a proximal drive slot **6237**, wherein the sidewalls of the drive slots **6236** and **6237** can be configured to contact the distal pin **6243** and the proximal pin **6244**, respectively, and drive the pins **6243** and **6244** upwardly as the actuator **6235** is moved proximally. More particularly, as the actuator **6235** is moved proximally, the distal pin **6243** can slide up an inclined first portion **6236***a* of the distal drive slot **6236** into an intermediate, or second, portion **6236***b* and, similarly, the proximal pin **6244** can slide up an inclined first portion **6237***a* of the distal drive slot **6237** into an intermediate, or second, portion **6237***b*. As the pins **6243** and **6244** are both moved upwardly, the jaw **6240** can be rotated downwardly toward the tissue T into a closed position.

Further to the above, referring now to FIG. **192**, the actuator **6235** can be pulled further proximally in order to push the second jaw **6240** downwardly toward the first jaw **6230**, compress the cartridge body **6210**, and engage the retention matrix **6250** and the plurality of protective caps **6270** with the staple legs of the staples **6220**. In at least one such embodiment, the additional proximal movement of the actuator **6235** can cause the sidewalls of the drive slots **6236** and **6237** to contact the pins **6243** and **6244**, respectively, and drive the pins **6243** and **6244** downwardly toward the bottom ends of the slots **6233** and **6234**, respectively. In such circumstances, the actuator **6235** can be pulled proximally such that, one, the distal pin **6243** exits the second portion **6236***b* of the drive slot **6236** and enters into an inclined third portion **6236***c* and, similarly, the proximal pin **6244** exits the second portion **6237***b* of the drive slot **6237** and enters into an inclined third portion **6237***c*. As the pins **6243** and **6244** are both moved downwardly, the second jaw **6240** can move downwardly toward the first jaw **6230** into a fired position. In at least one such embodiment, the second jaw **6240** can be moved downwardly such that the retention matrix **6250** remains parallel, or at least substantially parallel, to the top surface of the cartridge body **6210** and/or parallel, or at least substantially parallel, to the alignment matrix **6260**. In any event, once the retention matrix **6250** and the protective caps **6270** have been engaged with the staple legs **6221** of the staples **6220**, as illustrated in FIG. **194**, the second jaw **6240** can be returned to an open, or an at least substantially open, position. In at least one such embodiment, the actuator **6235** can be pushed distally in order to drive the pins **6243** and **6244** to the top ends of the slots **6233** and **6234**, respectively, and then driven downwardly toward the bottom ends of the slots **6233** and **6234** once the pins have passed through the intermediate portions **6236***b* and **6237***b* of the respective drive slots **6236** and **6237**. Once the second jaw **6240** has been opened, the first jaw **6230** can be detached from the implanted staple cartridge **6200** and the first and second jaws **6230**, **6240** can be removed away from the implanted fastener assembly, as illustrated in FIG. **193**.

Referring to FIG. **192** once again, the reader will note that the pins **6243** and **6244** are not illustrated as being seated in the very bottoms of their respective slots **6233** and **6234** eventhough the retention matrix **6250** and the caps **6270**

have been engaged with the staple legs **6221**. Such circumstances can arise when thick tissue T is positioned between the retention matrix **6250** and the cartridge body **6210**. In circumstances where thinner tissue T is positioned between the retention matrix **6250** and the cartridge body **6210**, referring now to FIG. **195**, the pins **6243** and **6244** can be drive further downwardly into their respective slots **6233** and **6234** as illustrated in FIG. **197**. In general, in at least one such embodiment, the actuator **6235** can be pulled proximally in order to drive the pins **6243** and **6244** upwardly and downwardly through the progressions described above and illustrated in FIGS. **195-197** and, owing to the thinner tissue T, the retention matrix **6250** and the protective caps **6270** can be driven further onto the staple legs **6221** of the staples **6220**, as illustrated in FIGS. **198** and **199**. In various embodiments, as a result of the adjustability afforded by the retention matrix **6250**, the same, or at least substantially the same, compressive pressure can be obtained in the fastened tissue regardless of whether the tissue captured within the end effector is thick or thin. In certain embodiments, the adjustability afforded by the retention matrix **6250** can allow a surgeon can select whether to apply a larger compressive pressure or a smaller compressive pressure to the tissue by selecting the depth to which the retention matrix **6250** is seated. In at least one such embodiment, the range in which the retention matrix **6250** can be seated onto the staple legs **6221** can be determined by the lengths, or ranges, of the slots **6233** and **6234**, for example.

In various embodiments, as described above, the protective caps **6270** can be comprised of a soft or flexible material, for example, which can be configured to grip the ends of the staple legs **6221**. In certain embodiments, the protective caps **6270** can be comprised of a bioabsorbable plastic, polyglycolic acid (PGA) which is marketed under the trade name Vicryl, polylactic acid (PLA or PLLA), polydioxanone (PDS), polyhydroxyalkanoate (PHA), poliglecaprone 25 (PGCL) which is marketed under the trade name Monocryl, polycaprolactone (PCL), and/or a composite of PGA, PLA, PDS, PHA, PGCL and/or PCL, for example, and/or a biocompatible metal, such as titanium and/or stainless steel, for example. As illustrated in FIG. **189**, in at least one embodiment, each cap **6270** can be unconnected to the other caps **6270**. In certain other embodiments, one or more caps **6270** can be mounted to the retention matrix **6250**. In at least one such embodiment, the caps **6270** can be connected to the retention matrix **6250** by at least one adhesive, for example, wherein the apertures **6271** in the caps **6270** can be aligned, or at least substantially aligned, with the retention apertures **6252** in the retention matrix **6270**. In various embodiments, referring now to FIG. **200**, a protective cap, such as a cap **6370**, for example, can define an inner cavity, or dome, **6374** which can be configured to receive a tip of a staple leg **6221**, for example, therein. In at least one such embodiment, the cap **6370** can comprise a bottom **6372** and an aperture **6371** extending through the bottom **6372**. In various embodiments, the aperture **6371** can be defined by one or more deflectable members **6373** which can be configured to deflect when the staple leg **6221** is inserted therethrough. In certain embodiments, two or more caps **6370**, for example, can be connected together to form an array of caps **6370**. In at least one such embodiment, referring now to FIG. **201**, a plurality of caps **6370** can be connected together by a sheet of material **6375**. In certain embodiments, the sheet **6375** can be sufficiently rigid in order to maintain a desired arrangement and/or alignment of the caps **6370**. In at least one embodiment, the caps **6370** can be comprised of a biocompatible metal, such as titanium and/or stainless steel, for example, and the sheet **6375** can be comprised of a bioabsorbable plastic, polyglycolic acid (PGA) which is marketed under the trade name Vicryl, polylactic acid (PLA or PLLA), polydioxanone (PDS), polyhydroxyalkanoate (PHA), poliglecaprone 25 (PGCL) which is marketed under the trade name Monocryl, polycaprolactone (PCL), and/or a composite of PGA, PLA, PDS, PHA, PGCL and/or PCL, for example. In various embodiments, a sheet **6375** can be comprised of a bioabsorbable material including an antimicrobial agent, such as colloidal silver and/or triclosan, for example, stored and/or dispersed therein which can be released as the sheet **6375** is bioabsorbed, for example.

In various embodiments, further to the above, the sheet **6375** can be injection molded around the caps **6370** utilizing an injection molding process, for example, such that the caps **6370** are embedded in the sheet **6375**. In certain other embodiments, the sheet **6375** can be molded utilizing an injection molding process, for example, wherein apertures **6376** can be formed in the sheet **6375** during the injection molding process and/or after the injection molding process utilizing a stamping process, for example. In either event, the caps **6370** can be inserted into and secured in the apertures **6376** utilizing a press-fit and/or snap-fit interconnection and/or at least one adhesive. In certain embodiments, each cap **6370** can comprise an annular groove surrounding, or at least partially surrounding, the perimeter of the cap **6370** which can be configured to receive the perimeter of an aperture **6376** therein. In certain embodiments, the sheet **6375** can be comprised of a flexible and/or pliable material which can permit relative movement between the caps **6370**. In at least one such embodiment, the flexible sheet **6375** can be comprised of a rubber, plastic, and/or silicone material, for example, and the caps **6370** can be comprised of a rigid material, such as metal, for example. In at least one such embodiment, similar to the above, the flexible material can be molded around the caps **6370**. In certain embodiments, the caps **6370** can be pressed into a pre-molded sheet **6375**, for example. In various embodiments, the durometer of the flexible material can be selected to provide a desired stiffness of the sheet **6375**. In certain embodiments, the sheet **6375** can be configured such that it comprises a flexible band. In any event, the sheet **6375** can facilitate the assembly of the caps **6370** into an end effector as a plurality of the caps **6370** can be positioned and/or aligned simultaneously within the end effector. Furthermore, the sheet **6375** connecting the caps **6370**, once implanted, can strengthen or bolster the tissue along the staple line, for example. In addition to or in lieu of a sheet connecting the caps **6370**, the caps **6370** can be connected together by a plurality of links. In at least one such embodiment, such links can be flexible and can permit relative movement between the caps **6370**.

In various embodiments, referring now to FIGS. **204** and **205**, a protective cap, such as cap **6470**, for example, can comprise a forming surface which can be configured to deform a tip of a staple leg. In at least one such embodiment, the cap **6470** can comprise a base **6472** which can include an aperture **6471** extending therethrough. In various embodiments, the aperture **6471** can be configured to closely receive a staple leg, such as a staple leg **6221**, for example, therein. In at least one embodiment, the aperture **6471** can be defined by a diameter or perimeter which can be equal to or larger than the diameter or perimeter of the staple leg **6221**. In various embodiments, the cap **6470** can further comprise a cavity, or dome, **6474** which can be configured to receive the tip of the staple leg **6221** as it is inserted into the cap

6470. Referring primarily to FIG. 205, the cap 6470 can further comprise an anvil, or forming surface, 6473 which can be configured to deflect and deform the staple leg 6221. In various circumstances, the forming surface 6473 can be curved and/or concave, for example, and can be configured to curl the staple leg 6221 as it is inserted into the cap 6470. In certain embodiments, the staple leg 6221 can be sufficiently deformed such that it cannot be withdrawn through the aperture 6471 and, as a result, the cap 6470 can become locked to the staple leg 6221. In at least one such embodiment, the base 6472 of the cap 6470 can define a lip extending around the aperture 6471 which can prevent the deformed staple leg 6221 from being removed from the cavity 6474. In various circumstances, as a result of the above, one or more caps 6470 can prevent, or inhibit, a retention matrix, such as retention matrix 6250, for example, from backing up or being disengaged from the staples 6220. In various embodiments, although not illustrated, the cap 6470 can be symmetrically, or at least substantially symmetrically, formed, and the aperture 6471 can be located along a central axis 6479 extending through the cap 6470. In various alternative embodiments, referring again to FIG. 204, the aperture 6471 can be offset with respect to the central axis 6479. In at least one such embodiment, the offset aperture 6471 can allow the staple leg 6221 to contact a side of the forming surface 6473 and curl over to the other side of the forming surface 6473 instead of contacting the center of the forming surface 6473, as may occur in embodiments comprising a centered aperture 6471 mentioned above.

In various embodiments, as discussed above, a retention matrix, such as retention matrix 6250, for example, can be comprised of a sheet of material and a plurality of retention apertures 6252 extending therethrough. In at least some embodiments, the sheet of material comprising the retention matrix 6250 can be rigid or substantially inflexible. In certain other embodiments, a retention matrix can be comprised of an array of retention matrix elements and a plurality of flexible connectors, or links, connecting the retention matrix elements. In various embodiments, referring now to FIG. 206, a retention matrix, or a portion of retention matrix, 6550 can comprise a plurality of element bodies 6505 which can be connected together by one or more connecting links 6507. In at least one embodiment, each element body 6505 can comprise a plurality of deformable members 6553 which define a retention aperture 6552 therein. In certain embodiments, the element bodies 6505 and the connecting links 6507 of a retention matrix 6550 can be integrally formed and can comprise a unitary piece of material. In various embodiments, the retention matrix 6550 can be stamped or cast, for example, from a metal material, such as titanium and/or stainless steel, for example. In at least one embodiment, the retention matrix 6550 can be comprised of plastic, such as polyetheretherketone (PEEK), polypropylene which is marketed under the trade name Prolene, polyester, polyethylene terephthalate which is marketed under the trade names Ethibond and Mersilene, polyvinylidene fluoride, polyvinylidene fluoride-co-hexafluoropropylene, poly hexafluoropropylene-VDF which is marketed under the trade name Pronova, and/or long-chain aliphatic polymers Nylon 6 and Nylon 6,6 which are marketed under the trade names Ethilon & Nurolon, for example, and can be formed by an injection molding process, for example. In certain embodiments, the element bodies 6505 may not be integrally formed with the connecting links 6507. In various embodiments, a plurality of singular element bodies 6505 can be produced which are subsequently connected together and embedded in a retention matrix. In at least one such embodiment, the element bodies 6505 can be stamped from a metal material, such as titanium and/or stainless steel, for example, and placed in a plastic injection mold wherein a plastic material can be injected into the mold to form, one, a rim 6506 of material surrounding, or at least partially surrounding, the element bodies 6505 and, two, connecting links 6507 extending from the rims 6506. In certain other embodiments, one or more connector lattices can be formed comprising apertures defined within a plurality of rims 6506 wherein each such aperture can be configured to receive an element body 6505 therein. In at least one embodiment, each element body 6505 can comprise a circular, or at least substantially circular, outer perimeter and, similarly, each rim 6506 can define a circular, or at least substantially circular, aperture therein, wherein the diameter of the aperture can be equal to or smaller than the diameter of the element body 6505. In at least one such embodiment, the element bodies 6505 can be press-fit or embedded into the apertures in the rims 6505. In certain embodiments, the element bodies 6505 can be secured in the apertures utilizing at least one adhesive.

In various embodiments, further to the above, a retention matrix can comprise a plurality of element bodies 6505 and a plurality of connecting links 6507 which can connect the element bodies 6505 in any suitable array, such as those illustrated in FIGS. 207-210, for example. Regardless of the pattern of the array, in various embodiments, the connecting links 6507 can be configured to allow the element bodies 6505 and the retention apertures 6552 to move relative to one another. In at least one such embodiment, the lattice of element bodies 6505 and connecting links 6507 comprising the retention matrix 6550, once engaged with tissue, can be configured to stretch, twist, contract, and/or otherwise flex in order to permit at least some movement within the tissue yet, at the same time, resist larger movements thereof. In various embodiments, each connecting link 6507 can comprise a flexible member configured to stretch, twist, and/or contract in order to permit the retention matrix 6550 to flex intermediate the matrix retention elements 6505, for example. Referring again to FIG. 206, each link 6507 extending from a rim 6506 can be defined by a width which is narrower than the width of the element body 6505 and/or the rim 6506. In certain embodiments, referring to FIGS. 207-210, one or more links 6507 can comprise straight portions which extend along a line between adjacent element bodies 6506, for example. In at least one such embodiment, each link 6507 can comprise a first end attached to a first rim 6506 and a second end attached to a second rim 6506. In certain embodiments, referring once again to FIG. 206, two or more links 6507 can be connected to one another. In at least one such embodiment, two or more links 6507 can be connected at an intermediate hinge 6509, for example. In various embodiments, the hinge 6509 can comprise a reduction in cross-sectional thickness in one or more directions as compared to the cross-sectional thickness of the links 6507 which can permit the connected links 6507 to move relative to each other, for example. In certain embodiments, the retention matrix 6550 can further comprise hinges 6508 which can connect the links 6507 to the rims 6506 and permit relative movement between the links 6507 and the rims 6506. Similar to hinges 6509, hinges 6508 can comprise a reduction in cross-sectional thickness in one or more directions as compared to the cross-sectional thickness of the links 6507, for example.

In various embodiments, further to the above, the connected links 6507 can extend in different directions. In at least one such embodiment, a first link 6507 can extend in

a first direction and a second link **6507** can extend in a second direction, wherein the first direction can be different than the second direction. In certain embodiments, the first link **6507** can extend along a first line and the second link **6507** can extend along a second line, wherein the first line and the second line can intersect each other at an angle, such as approximately 30 degrees, approximately 45 degrees, approximately 60 degrees, and/or approximately 90 degrees, for example. In various embodiments, the hinges **6508** and/or hinges **6509** can comprise living hinges which can permit the links **6507** to move relative to each other a number of times without breaking. In certain embodiments, the hinges **6508** and/or hinges **6509** can comprise frangible, or easily-breakable, portions which can break when flexed too far and/or flexed too many times. In at least one such embodiment, such frangible portions can permit one or more portions of the retention matrix **6550** to break away from another portion of the retention matrix **6550**. In various embodiments, the hinges **6508** and/or hinges **6509**, for example, can comprise sections of the retention matrix **6550** which are easier to incise than the other portions of the retention matrix **6550**. More particularly, an implanted retention matrix, and the tissue fastened by the implanted retention matrix, may oftentimes by incised by a cutting member for various reasons and, in order to facilitate such cross-cutting, the hinges **6508** and/or hinges **6509** can provide avenues, or thin sections, through which a cutting member can more easily pass through the retention matrix **6550**, for example. In various embodiments, further to the above, the connecting links **6507** can comprise one or more coined features or material upsets, for example, defined therein which can facilitate the bending, breakage, and/or incision of the connecting links **6507**.

In various embodiments, a retention matrix can comprise a plurality of retention matrix elements, such as matrix element bodies **6505**, for example, which can be embedded in a flexible sheet, or band, of material. In at least one embodiment, a flexible sheet of material can be formed from a bioabsorbable, elastomeric material, such as silicone, for example, wherein the flexible sheet can be produced with a plurality of apertures defined therein. In at least one such embodiment, a solid flexible sheet can be molded and a plurality of apertures can be punched out of the flexible sheet. In various alternative embodiments, the flexible sheet can be molded and the apertures defined therein can be formed during the molding process. In either event, the retention matrix elements **6505**, for example, can be inserted into and retained within the flexible sheet. In certain other embodiments, similar to the above, the flexible sheet can be formed around the matrix elements **6505**. In at least one embodiment, the flexible sheet can be comprised of a woven mesh, for example, and/or any other suitable material. Such a woven mesh, further to the above, may be easy to cross-cut.

In various embodiments, referring now to FIGS. **211** and **212**, a fastener system comprising a retention matrix, such as retention matrix **6250**, for example, can further comprise a cover, such as cover **6670**, for example, which can cover the tips of the staple legs **6221** when they extend above the top surface **6257** of the retention matrix **6250**. In various embodiments, the cover **6670** can be attached to the retention matrix **6250**. In certain embodiments, the cover **6670** and/or the retention matrix **6250** can comprise retention features which can be configured to retain the cover **6670** to the retention matrix **6250**. In at least one embodiment, at least one adhesive can be utilized to adhere the cover **6670** to the retention matrix **6250**. In at least one embodiment, the cover **6670** can be comprised of a single layer, although the cover **6670** is illustrated as comprising two layers as described in greater detail further below. In various embodiments, referring primarily to FIG. **212**, the tips of the staple legs **6221** can extend through a bottom surface **6673** of the cover **6670**; however, the cover **6670** can comprise a sufficient thickness such that the staple tips do not extend through the top surface **6675** of the cover **6670**. In at least one such embodiment, as a result, the tips of the staple legs **6221** may not protrude from the cover **6670**. In various embodiments, the cover **6670** can comprise a plurality of layers. In at least one such embodiment, the cover **6670** can comprise a first layer **6671** and a second layer **6672**. In at least one embodiment, the first layer **6671** and the second layer **6672** can be attached to one another wherein, in at least one embodiment, the second layer **6672** can comprise a bottom surface **6676** which is adhered to the first layer **6671**. In various embodiments, the first layer **6671** and the second layer **6672** can comprise different thicknesses while, in certain embodiments, they can comprise the same thickness. In at least one embodiment, the first layer **6671** and the second layer **6672** can comprise substantially the same width and/or length. In alternative embodiments, the layers **6671** and **6672** can comprise different widths and/or lengths.

In various embodiments, further to the above, the first layer **6671** can be comprised of a compressible foam, mesh material, and/or hydrogel, for example, which can be incised by the staple legs **6211**. In at least one embodiment, the second layer **6672** can be comprise of a tougher material, or skin, such as PGA and/or PDS, for example, and/or any suitable buttress material. In at least one such embodiment, the staple legs **6221** can be configured to penetrate the first layer **6671**; however, in various embodiments, the staple legs **6221** may be unable to penetrate the second layer **6672**. In certain embodiments, the second layer **6672** can be comprised of a material having a sufficient resiliency and/or toughness which can permit the second layer **6672** to be contacted and displaced by the staple leg **6221** but not be incised, or only marginally incised, by the staple tip of the staple leg **6221**. Although not illustrated, a cover can comprise more than two layers wherein one or more of such layers may be penetration-resistant. In use, in at least one such embodiment, the retention matrix **6250** can be positioned against the tissue to be fastened and pushed downwardly such that the staple legs **6221** of the staples **6220** are pushed through the tissue T and the retention apertures **6252** in the retention matrix **6250** and enter into the first layer **6271** of the cover **6270**. In various embodiments, the tips of the staple legs **6221** may not enter, or at least substantially enter, into the second layer **6272** of the cover **6270**. After the retention matrix **6250** has been suitably positioned, the jaw **6240** can be opened and the cover **6670** and the retention matrix **6250** can detach from the jaw **6240** as illustrated in FIG. **211**. As illustrated in FIG. **211**, a jaw **6640** can be configured to hold more than one retention matrix **6250** and cover **6670**. In at least one such embodiment, the jaw **6640** can comprise two channels **6679** which each can be configured to receive a cover **6670** therein and a retention matrix **6250** positioned thereover such that the tissue-contacting surface **6251** of each retention matrix **6250** depends downwardly from the bottom of the jaw **6240**. In at least one such embodiment, a retention matrix **6250** and a cover **6270** can be housed in the jaw **6640** on each side of a knife slot **6678**. In use, both retention matrices **6250** and covers **6670** can be deployed simultaneously and/or to the same depth with respect to opposing staple cartridges, such as cartridges **6200**, for example, positioned thereacross. Thereafter, in

various embodiments, the fastened tissue can be incised along a cutting line by a cutting member that traverses the knife slot **6678** wherein the jaw **6640** can then be re-opened. In certain embodiments, the covers **6670** may not be attached to the retention matrix **6250**. In at least one such embodiment, the covers **6670** can be positioned in the channels **6679** and can be retained in the channels **6679** by the retention matrices **6250** which can be secured to the jaw **6640**. In various embodiments, the each retention matrix **6250** can be wider and/or longer than their respective covers **6670** such that the retention matrices **6250** can retain the entirety of their covers **6670** in position. In certain embodiments, each retention matrix **6250** can comprise the same width and/or length as their respective cover **6670**, for example.

In various embodiments, as described above, a fastener system can comprise a layer of material which can be attached to a retention matrix, such as retention matrix **6250**, for example. In at least one embodiment, referring now to FIG. **215**, a layer of material **6870** can be attached to the bottom surface **6251** of the retention matrix **6250**. In certain embodiments, the layer **6870** and/or the retention matrix **6250** can comprise retention features which can be configured to retain the layer **6870** to the retention matrix **6250**. In at least one embodiment, at least one adhesive can be utilized to adhere the layer **6870** to the retention matrix **6250**. In any event, the layer **6870** can comprise a bottom, or tissue-contacting, surface **6873** which can be configured to contact the tissue T when the retention matrix **6250** is moved downwardly toward the staples **6220** to engage the retention apertures **6252** with the staple legs **6221**. In at least one such embodiment, the layer **6870** can be comprised of a compressible material, such as a bioabsorbable foam, for example, which can be compressed between the bottom surface **6251** of the retention matrix **6250** and the tissue T. In various embodiments, the layer **6870** can further comprise at least one medicament stored and/or absorbed therein which can be expressed from the layer **6870** as the layer **6870** is compressed. In at least one embodiment, the medicament can comprise at least one tissue sealant, hemostatic agent, and/or anti-microbial material, such as ionized silver and/or triclosan, for example. In various embodiments, the compression of the layer **6870** can squeeze the medicament from the layer **6870** such that the entirety of, or at least a significant portion of, the surface of the tissue T is covered with the medicament. Furthermore, as the layer **6870** is compressed and the staple legs **6221** penetrate the tissue T and the layer **6870**, the medicament can flow down the staple legs **6221** and treat the tissue that has just been incised by the staple legs **6221**, for example. In various embodiments, the body of the retention matrix **6250** can comprise a first layer which is comprised of a biocompatible material, such as titanium and/or stainless steel, for example, and the bottom layer **6870** can comprise a second layer comprised of a bioabsorbable material, such as oxidized regenerated cellulose (ORC), biologically active agents like fibrin and/or thrombin (either in their liquid state or freeze dried), glycerin, absorbable porcine gelatin in either flue or foam configurations, and/or anti-microbials, such as ionized silver and/or triclosan, for example. Additional bioabsorbable materials can comprise Surgicel Nu-Knit, Surgicel Fibrillar, collagen/ORC which is a hybrid with a built in collagen matrix and is marketed under the trade name Promogran, polyglycolic acid (PGA) which is marketed under the trade name Vicryl, polylactic acid (PLA or PLLA), polydioxanone (PDS), polyhydroxyalkanoate (PHA), poliglecaprone 25 (PGCL) which is marketed under the trade name Monocryl, polycaprolactone (PCL), and/or a composite of PGA, PLA, PDS, PHA, PGCL and/or PCL, for example. Although only one layer **6870** is illustrated in FIG. **215**, any suitable number of layers could be used. In at least one embodiment, a first layer comprising a first medicament could be attached to the retention matrix **6250** and a second layer comprising a second, or different, medicament could be attached to the first layer. In at least one such embodiment, a plurality of layers could be used wherein each layer can comprise a different medicament and/or a different combination of medicaments contained therein.

In various embodiments, referring now to FIG. **213**, a fastener system can comprise a layer of material **6770** attached to the bottom surface **6251** of the retention matrix **6250**. In certain embodiments, the layer **6770** and/or the retention matrix **6250** can comprise retention features which can be configured to retain the layer **6770** to the retention matrix **6250**. In at least one embodiment, at least one adhesive can be utilized to adhere the layer **6770** to the retention matrix **6250**. In any event, the layer **6770** can comprise a bottom, or tissue-contacting, surface **6773** which can be configured to contact the tissue T when the retention matrix **6250** is moved downwardly toward the staples **6220** to engage the retention apertures **6252** with the staple legs **6221**. In at least one such embodiment, the layer **6770** can be comprised of a compressible material, such as a bioabsorbable foam, for example, which can be compressed between the surface **6251** of the retention matrix **6250** and the tissue T. In various embodiments, the layer **6770** can further comprise one or more encapsulations, or cells, **6774** which can be configured to store at least one medicament therein. In certain embodiments, referring to FIG. **214**, the encapsulations **6774** can be aligned, or at least substantially aligned, with the retention apertures **6252** such that, when the staple legs **6221** are pushed through the tissue T and the layer **6770**, the staple legs **6221** can puncture and/or otherwise rupture the encapsulations **6774**. After the encapsulations **6774** have been ruptured, the at least one medicament M stored in the encapsulations **6774** can flow out onto the tissue T. In at least one such embodiment, the medicament M can comprise a fluid which can flow or wick down the staple legs **6221** and treat the tissue T that was just incised by the staple legs. As a result of the above, the medicament stored within the encapsulations **6774** can provide a localized treatment to the tissue. In certain embodiments, the encapsulations **6774** in the sheet **6770** can comprise different medicaments stored therein. For example, a first group of encapsulations **6774** can comprise a first medicament, or a first combination of medicaments, stored therein and a second group of encapsulations can comprise a different medicament, or a different combination of medicaments, stored therein. In various embodiments, the layer **6770** can be comprised of a flexible silicone sheet and the encapsulations **6774** can represent voids in the silicone sheet. In at least one such embodiment, the silicone sheet can comprise two layers that can be attached to one another wherein the encapsulations **6774** can be defined between the two layers. In various embodiments, the layer **6770** can comprise one or more thin sections or weakened portions, such as partial perforations, for example, which can facilitate the incision of the layer **6770** and the rupture of the encapsulations **6774** by the legs **6221**. In certain embodiments, at least a portion of the encapsulations **6774** can be positioned within domes **6777**, wherein the domes **6777** can extend upwardly from the sheet **6770**. In at least one such embodiment, the domes **6777** and/or at least a portion of the encapsulations **6774** can be positioned within the pockets **6201** formed within the

retention matrix **6250**. In certain embodiments, the encapsulations **6774** may comprise discrete cells which are unconnected to each other. In certain other embodiments, one or more of the encapsulations **6774** can be in fluid communication with each other via one or more passageways, conduits, and/or channels, for example, extending through the layer **6770**. The disclosure of U.S. Pat. No. 7,780,685, entitled ADHESIVE AND MECHANICAL FASTENER, which issued on Aug. 24, 2010, is hereby incorporated by reference in its entirety.

In various embodiments, further to the above, a staple cartridge comprising a cartridge body, staples, and/or an alignment matrix therein can be loaded into a first jaw of an end effector and, similarly, a retention matrix and/or one or more covers can be loaded into a second jaw of the end effector. In certain embodiments, referring now to FIG. **216**, an instrument, such as cartridge loader **6990**, for example, can be used to insert two or more fastener cartridges into an end effector at the same. In at least one embodiment, the cartridge loader **6990** can comprise a handle **6991** and a cartridge carrier **6992**, wherein the cartridge carrier **6992** can comprise a first retention portion configured to retain the cartridge body **6210** of the staple cartridge **6200** thereto and, in addition, a second retention portion configured to retain a cartridge body **6980** which supports, one, a plurality of protective caps **6270** therein and, two, a retention matrix **6250** along the bottom surface thereof, for example. In various embodiments, the first and second retention portions can each comprise one or more retention members configured to releasably engage the cartridge bodies **6210** and **6980**. In use, referring now to FIGS. **217** and **218**, an end effector can comprise a first, or bottom, jaw **6230** and a second, or top, jaw **6940**, wherein the staple cartridge **6200** can be loaded into the first jaw **6230** and the cartridge body **6980** can be loaded into the second jaw **6940**. In various circumstances, the top jaw **6940** can be rotated from an open position (FIG. **217**) to a closed position (FIG. **218**) by an actuator **6235**, wherein the operation of the actuator **6235** is described above and is not repeated herein for the sake of brevity. Once the top jaw **6940** is in its closed position, referring now to FIG. **218**, the distal end **6993** of the cartridge carrier **6992** can be inserted into the end effector such that the staple cartridge **6200** is slid through the distal end **6938** of the first jaw **6930** and into a first attachment portion, or channel, **6939** in the first jaw **6230**. Similarly, the distal end **6993** of the cartridge carrier **6992** can be inserted into the end effector such that the cartridge body **6980** is slid through the distal end **6948** of the second jaw **6940** and into a second attachment portion, or channel, **6949** in the second jaw **6940**. A surgeon, or other clinician, holding the handle **6991** of the cartridge loader **6990** can push the staple cartridge **6200** and the cartridge body **6980** through the channels **6939** and **6949**, respectively, until the staple cartridge **6200** and the cartridge body **6980** are fully seated therein.

As the staple cartridge **6200** and the cartridge body **6980** are being seated, the staple cartridge **6200** and the cartridge body **6980** can each engage one or more retention portions in their respective jaws **6230** and **6940**, as described in greater detail further below. In any event, once the staple cartridge **6200** and the cartridge body **6980** have been seated, referring now to FIG. **219**, the cartridge loader **6990** can be detached from the staple cartridge **6200** and the cartridge body **6980** and removed from the end effector. In at least one such embodiment, the retention force holding the staple cartridge **6200** in the first jaw **6230** can be greater than the retention force holding the staple cartridge **6200** to the cartridge carrier **6992** such that, as the cartridge carrier **6992** is pulled distally out of the end effector, the staple cartridge **6200** can remain behind in the first jaw **6230**. Similarly, the retention force holding the cartridge body **6980** in the second jaw **6940** can be greater than the retention force holding the cartridge body **6940** to the cartridge carrier **6992** such that, as the cartridge carrier **6992** is pulled distally out of the end effector, the cartridge body **6940** can remain behind in the second jaw **6940**. Once the cartridge loader **6990** has been removed from the end effector, the loaded first jaw **6230** and the loaded second jaw **6940** can be positioned relative to the tissue T that is to be stapled. Referring now to FIG. **220**, the second jaw **6940** can be moved from an open position (FIG. **219**) to a fired position (FIG. **220**) in order to engage the retention matrix **6250** and the plurality of protective caps **6270** carried by the cartridge body **6980** with the staples **6220** positioned within the staple cartridge **6200**.

Referring now to FIGS. **221** and **222**, the second jaw **6940** can be re-opened and the plurality of protective caps **6270** and the retention matrix **6250** can detach from the cartridge body **6980** such that the caps **6270** and the retention matrix **6250** can remain engaged with the tissue T and the staple cartridge **6200**. In at least one embodiment, the cartridge body **6980** can comprise a plurality of pockets in which the plurality of caps **6270** can be removably positioned and one or more retention slots configured to removably retain the retention matrix **6250** thereto. In various embodiments, the retention members of the second jaw **6940** engaged with the cartridge body **6980** can retain the cartridge body **6980** in the second jaw **6940** after the second jaw **6940** has been opened. In certain embodiments, the cartridge body **6980** can be configured to tear as the second jaw **6940** is opened such that a portion of the cartridge body **6980** is implanted with the caps **6270** and the retention matrix **6250** and a portion of the cartridge body **6980** remains in the second jaw **6940**. Similarly, referring again to FIGS. **221** and **222**, the retention members of the first jaw **6230** engaged with the cartridge body **6210** can retain the cartridge body **6210** in the first jaw **6230** after the second jaw **6940** has been opened. In certain embodiments, the cartridge body **6210** can be configured to tear as the first jaw **6230** is pulled away from the implanted cartridge **6200** such that a portion of the cartridge body **6210** is implanted with the staples **6220** and alignment matrix **6260** and a portion of the cartridge body **6210** remains in the first jaw **6230**. In various embodiments, referring now to FIGS. **223-225**, a staple cartridge, such as staple cartridge **6900**, for example, can comprise one or more longitudinal retention slots **6913** extending along the length of the cartridge body **6910** which, when the staple cartridge **6900** is inserted into a jaw **6930**, for example, can be configured to receive one or more longitudinal retention rails **6916** extending from the jaw **6930** therein. In use, in at least one embodiment, an end of the retention slots **6913** can be aligned with the distal ends of the retention rails **6916** before the staple cartridge **6900** is slid through the distal end **6938** of the retention channel **6939**, for example.

In various embodiments, referring again to FIG. **225**, the jaw **6940** can comprise two retention channels **6949**, wherein each retention channel **6949** can be configured to receive a cartridge body **6980** comprising a plurality of caps **6270** and a retention matrix **6250** therein. In certain embodiments, each cartridge body **6980** can comprise one or more longitudinal retention shoulders **6917** which can be configured to be slid along one or more longitudinal retention rails **6918** of the second jaw **6940** as the cartridge bodies **6980** are inserted into their respective retention channels **6949** in jaw

6940. In various embodiments, the retention rails **6918** and the retention shoulders **6917** can co-operate to retain the cartridge body **6980** in the second jaw **6940** as the cartridge bodies **6980** are detached from the caps **6270** and the retention matrix **6250** stored therein. In various embodiments, referring now to FIG. **224**, the second jaw **6940** can further comprise one or more distal bumps, or retention members, **6915** extending therefrom which can be configured to removably lock the cartridge bodies **6980** in their respective retention channels. In at least one such embodiment, the second jaw **6940** can comprise a distal bump **6915** configured and positioned relative to each retention channel **6949** such that each cartridge body **6980** can flex around the bumps **6915** as the cartridge bodies **6980** are being inserted into the channels **6949** wherein, just as the cartridge bodies **6915** are being fully seated in the channels **6949**, the distal ends of the cartridge bodies **6980** can clear and snap over the bumps **6915**. In order to remove the cartridge bodies **6980** after they have been expended, as described above, the cartridge bodies **6980** can be pulled back over the bumps **6915** and removed from the retention channels **6949**. Similar to the above, the first jaw **6930** can comprise one or more distal retention bumps **6914** extending therefrom which can be configured to be received in one or more retention grooves, or slots, **6912** (FIG. **223**) in the cartridge body **6910** when the staple cartridge **6900** has been fully seated.

In various embodiments, further to the above, a first fastener cartridge comprising a plurality of first fasteners positioned therein can be positioned in a first jaw of a surgical fastening device and a second fastener cartridge comprising a plurality of second fasteners positioned therein can be positioned in a second jaw of the surgical fastening device. In use, the first jaw and/or the second jaw can be moved toward the other in order to engage the first fasteners with the second fasteners and secure tissue therebetween. In certain embodiments, the first fastener cartridge and the second fastener cartridge can be engaged with each other as the first fasteners are engaged with the second fasteners. In at least one embodiment, the body of the first fastener cartridge can be comprised of a first compressible material and the body of the second fastener cartridge can be comprised of a second compressible material, wherein the first body and/or the second body can be compressed against the tissue being fastened. After the tissue has been fastened, the first jaw can be moved away from the implanted first fastener cartridge and the second jaw can be moved away from the implanted second fastener cartridge. Thereafter, the first jaw can be reloaded with another first fastener cartridge, or the like, and the second jaw can be reloaded with another second fastener cartridge, or the like, and the surgical fastening instrument can be reused. While staples can be used in some embodiments, other embodiments are envisioned comprising other types of fasteners, such as two-part fasteners which are locked together when they are engaged with one another, for example. In at least one such embodiment, the first fastener cartridge can comprise a first storage portion for storing the first fastener portions and the second fastener cartridge can comprise a second storage portion for storing the second fastener portions. In various embodiments, the fastening systems described herein can utilize fasteners comprising any suitable type of material and/or form. In certain embodiments, the fasteners can comprise penetrating members. Such penetrating members could be comprised of a polymer, a composite, and/or a multi-layered substrate, for example. An example of a multi-layered substrate could be a wire or a sheet substrate with an elastomeric or polymeric coating. It could be a thin sheet formed such that penetrating members are oriented perpendicular, or at least substantially perpendicular, to the connecting member. The penetrating members could comprise a rectangular profile, semi-circular profile, and/or any beam profile. In various embodiments, the fasteners described herein can be manufactured utilizing any suitable process, such as a wire extruding process, for example. Another possibility is the use of microfabrication to create hollow penetrating members. These penetrating members could be fabricated from a process which is different than a wire extruded process and could use a combination of materials.

As described above, the tips of staple legs protruding through a retention matrix can be covered by one or more caps and/or covers. In certain embodiments, the tips of the staple legs can be deformed after they have been inserted through the retention matrix. In at least one embodiment, a jaw holding the retention matrix can further comprise anvil pockets positioned above and/or aligned with the retention apertures which can be configured to deform the staple legs as they protrude above the retention matrix. In various embodiments, the staple legs of each staple can be curled inwardly toward each other and/or toward the center of the staple, for example. In certain other embodiments, one or more of the staple legs of a staple can be curled outwardly away from the other staple legs and/or away from the center of the staple. In various embodiments, regardless of the direction in which the staple legs are curled, the tips of the staple legs can contact the body of the retention matrix and may not re-enter the tissue that has been fastened by the staples. In at least one embodiment, the deformation of the staple legs after they have passed through the retention matrix can lock the retention matrix in position.

In various embodiments, referring now to FIGS. **226** and **227**, a surgical stapling instrument, such as surgical stapler **7000**, for example, can comprise a first jaw **7030** and a second jaw **7040**, wherein the second jaw **7040** can be moved toward and away from the first jaw **7030** by the movement of actuator **6235**. The operation of actuator **6235** is described above and is not repeated herein for the sake of brevity. In various embodiments, the first jaw **7030** can comprise a distal end **7031** and a proximal end **7032**, wherein the first jaw **7030** can define a channel extending between the distal end **7031** and the proximal end **7032** which is configured to receive a staple cartridge. For the purposes of illustration, the cartridge body of such a staple cartridge is not depicted in FIG. **226**, although such a staple cartridge can comprise a cartridge body, staples **6220** positioned within the cartridge body, and staple drivers **7012** positioned underneath the staples **6220**. In certain embodiments, although not illustrated in FIG. **226** for the sake of clarity, the second jaw **7040** can be configured to hold a retention matrix, such as retention matrix **6250**, for example, over the staples **6220** and/or move the retention matrix into engagement with the legs of the staples **6220** as described above. In at least one embodiment, the surgical stapler **7000** can further comprise a sled **7010** positioned in the first jaw **7030** which can be slid from the distal end **7031** of the first jaw **7030** toward the proximal end **7032**, for example, and lift the staple drivers **7012**, and the staple **6220** supported thereon, toward the retention matrix and the second jaw **7040**. In various other embodiments, the sled **7010** can be moved from the proximal end **7032** toward the distal end **7031** in order to deploy the staples **6020**, for example. In at least one embodiment, the sled **7010** can comprise one or more inclined ramps, or cams, **7011** which can be configured to slide underneath the staple drivers **7012** and lift the staple drivers **7012** upwardly. In various embodiments, the surgical

stapler **7000** can further comprise a pull, or push, rod operably coupled to the sled **7010** which can be moved proximally and/or distally by an actuator located on a handle and/or shaft of the surgical stapler **7000**, for example.

In various embodiments, referring again to FIG. **226**, the second jaw **7040** of the surgical stapler **7000** can comprise a frame **7041**, a distal end **7048**, and a proximal end **7049** positioned opposite the distal end **7048**. In certain embodiments, the second jaw **7040** can further comprise a guide system comprising one or more guide rails, such as guide rails **7045** and **7046**, for example, extending along the longitudinal axis of the frame **7041** which, as described in greater detail further below, can be configured to guide one or more anvils, or cams, which can engage and deform the staple legs of the staples **6220** after the staple legs **6221** of the staples **6220** have passed through the retention matrix. In at least one such embodiment, the guide rails **7045** and **7046** can comprise a guide wire or cable which extends along a top portion or surface of the frame **7041**, around a distal post **7047**, and back along the top portion or surface of the frame **7041**, for example. In various embodiments, as mentioned above and referring primarily now to FIGS. **228** and **230**, the second jaw **7040** can further comprise one or more anvils, or cams, such as first anvil **7050** and second anvil **7060**, for example, which can be moved longitudinally along the second jaw **7040** in order to deform the legs of the staples **6220** after they have passed through the retention matrix. In at least one embodiment, the surgical stapler **7000** can further comprise a first anvil driver, or actuator, **7051** connected to and/or operably coupled to the first anvil **7050** which can be configured to pull the first anvil **7050** proximally and/or push the first anvil **7050** distally. Similarly, in at least one embodiment, the surgical stapler **7000** can further comprise a second anvil driver, or actuator, connected to and/or operably coupled to the second anvil **7060** which can be configured to push the second anvil **7060** distally and/or pull the second anvil **7060** proximally. In various embodiments, the first anvil **7050** can comprise guide slots **7052** and the second anvil **7060** can comprise guide slots **7062** which can each be configured to slidably receive guide rail **7045** or guide rail **7046** therein. In at least one such embodiment, the guide rails **7045** and **7046** can be closely received within the guide slots **7052** and **7062** such that relative lateral, or side-to-side, movement therebetween can be prevented, or at least limited.

In certain embodiments, further to the above, the first anvil **7050** can be pulled proximally and the second anvil **7060** can be pulled distally. In at least one embodiment, referring to FIG. **226**, the guide rails **7045** and **7046** and the distal post **7047** can comprise a pulley system configured to pull the second anvil **7060** distally and/or pull the second anvil **7060** proximally. In at least one such embodiment, the guide rail **7045** and the guide rail **7046** can comprise a continuous wire or cable extending around the distal post **7047**, wherein a portion of the continuous wire can be pulled in order to cycle the wire around the distal post **7047**. In various embodiments, the guide rail **7046**, for example, can be mounted to the second anvil **7060** such that, when the continuous cable is cycled in a first direction, the second anvil **7060** can be pulled distally toward the distal end **7048** of the jaw **7040** and, when the continuous cable is cycled in a second, or opposite, direction, the second anvil **7060** can be pulled proximally toward the proximal end **7049**. In at least one embodiment, referring now to FIG. **228**, the guide rail **7046** can be secured within a guide slot **7062** such that a pulling force can be transmitted therebetween. In at least one such embodiment, the guide rail **7045** can be configured to slide within the other guide slot **7062**. In various embodiments, the first anvil **7050** may operate independently of the second anvil **7060** and the pulley system and the guide slots **7052** defined in the first anvil **7050** may be configured to slidably receive the guide rails **7045** and **7046** such that relative movement is permitted therebetween. In various embodiments, the continuous cable comprising guide rails **7045** and **7046** can be sufficiently flexible in order to accommodate the opening and closing of the top jaw **7040**. The continuous cable can also be sufficiently flexible in order to accommodate the vertical movement of the second anvil **7060** toward and away from the bottom jaw **7030**, which is described in greater detail further below.

In various embodiments, referring again to FIGS. **228** and **230**, the first anvil **7050** can comprise cam followers **7055** extending therefrom which can be configured to ride in one or more cam slots, or guide slots, such as cam slot **7070** (FIG. **231**), for example, defined in the frame **7041** of the second jaw **7040**. More particularly, in at least one embodiment, the frame **7041** can comprise a first cam slot **7070** extending longitudinally along a first side of the frame **7041** and a second cam **7070** extending longitudinally along a second, or opposite, side of the frame **7041**, wherein the cam followers **7055** extending from a first side of the first anvil **7050** can ride in the first cam slot **7070** and the cam followers **7055** extending from a second side of the first anvil **7050** can ride in the second cam slot **7070**. In at least one such embodiment, the contours of each cam slot **7070** can be identical, or at least substantially identical, and can be aligned, or at least substantially aligned, with one another. Similarly, in various embodiments, the second anvil **7060** can comprise cam followers **7065** extending therefrom which can be configured to ride in the cam slots **7070** (FIG. **231**) defined in the frame **7041** of the second jaw **7040**. More particularly, in at least one embodiment, the cam followers **7065** extending from a first side of the second anvil **7060** can ride in the first cam slot **7070** and the cam followers **7065** extending from a second side of the second anvil **7060** can ride in the second cam slot **7070**. In use, the cam followers **7055** of the first anvil **7050** and the cam followers **7065** of the second anvil **7060** can slide within the cam slots **7070** such that first anvil **7050** and the second anvil **7060** follow the contours of the cam slots **7070** as the first anvil **7050** and the second anvil **7060** are pulled proximally and/or pushed distally. In various embodiments, each cam slot **7070** can comprise a plurality of dwell, or upper, portions **7071** and a plurality of driver, or lower, portions **7072** which can be configured to move the anvils **7050** and **7060** vertically, i.e., toward and away from the bottom jaw **7030**, at the same time that the anvils **7050** and **7060** are being moved longitudinally, i.e., between the distal end **7048** and the proximal end **7049** of the frame **7041**, as described in greater detail further below.

When the surgical stapler **7000** is in an unfired condition, referring to FIG. **231**, the first anvil **7050** can be positioned at the distal end **7048** of the frame **7041** and the second anvil **7060** can be positioned at the proximal end **7049** of the frame **7041**; furthermore, referring now to FIG. **232**, the staples **6220** positioned in the first jaw **7030** may not yet be inserted into the tissue T and/or the retention matrix positioned thereabove when the surgical stapler **7000** is in an unfired condition. In use, referring now to FIG. **233**, the staples **6220** can be driven upwardly within the staple cavities **7033** of a staple cartridge by the staple drivers **7012** and, in addition, the first anvil **7050** can be moved proximally from the distal end **7048** of the frame **7041** toward the distal end **7049** in order to engage the staple legs **6221** of the

staples **6220**. In at least one embodiment, the staples **6220** can be driven upwardly before the first anvil **7050** is engaged with the staple legs **6221** thereof. In various embodiments, all of the staples **6220** may be deployed upwardly by the sled **7010** before the first anvil **7050** is advanced into contact with the staple legs **6221** or, alternatively, the sled **7010** may be moved proximally at the same time that the first anvil **7050** is moved proximally, although the sled **7010** may sufficiently lead the first anvil **7050** in order to deploy the staples **6220** ahead of the first anvil **7050**. In various embodiments, as illustrated in FIG. **233**, the cam slots **7070** can be configured and arranged such that the forming surfaces, such as forming, or camming, surfaces **7053** and **7054**, for example, of the first cam **7050** can contact at least some of the staple legs **6221** when the first cam **7050** is passing through a dwell, or upper, position. In various circumstances, the cam followers **7055** of the first anvil **7050** can each be positioned in a dwell portion **7071** of the cam slots **7070** such that the forming surfaces **7053** and **7054** are in a raised position and such that the staple legs **6221** are only partially deformed when the anvil **7050** passes thereby in the dwell position. As the first cam **7050** is moved further along the cam slots **7070**, as illustrated in FIG. **234**, the cam followers **7055** of the first anvil **7050** can be driven into driven, or lower, portions **7072** of the cam slots **7070** such that the forming surfaces **7053** and **7054** are moved vertically downwardly toward the staple legs **6021** in order to drive the staple legs **6021** into their finally formed configurations. Thereafter, as the first anvil **7050** is progressed further along the cam slots **7070**, the first anvil **7050** can be driven vertically upwardly into another set of dwell portions **7071** of the cam slots **7070**. As illustrated in FIGS. **233** and **234**, the reader will note that the first anvil **7050** may only engage some of the staple legs and not others. In at least one such embodiment, the first anvil **7050** can be configured to only deform a group of staple legs comprising the distal staple legs **6221** of the staples **6220**, for example. In at least one such embodiment, the first anvil **7050** can be configured to deform the distal staple legs **6221** toward the center of the staples **6220**. In various embodiments, each proximal staple leg **6221** can be contacted twice by the first anvil **7050**, i.e., by a first forming surface **7053** and by a second forming surface **7054** aligned with the first forming surface **7053**. In at least one such embodiment, the first forming surfaces **7053** can deform the distal staple legs **6221** into a partially-deformed configuration when the first anvil **7050** is in a dwell, or upper, position and the second forming surfaces **7054** can deform the distal staple legs **6221** into a fully-formed configuration when the first anvil **7050** is moved into a driven, or lower, position. In various embodiments, referring now to FIGS. **228** and **229**, the first anvil **7050** can comprise a plurality of first forming surfaces **7053** and a plurality of second forming surfaces **7054** in order to deform the distal staple legs **6221** of staples **6220** when the staple legs **6221** are arranged in more than one row or line. In various embodiments, as described in greater detail further below, the proximal staple legs **6221** of the staples **6020** can be deformed by the second anvil **7060**, for example.

In various embodiments, further to the above, the first anvil **7050** can be moved from the distal end **7048** of the frame **7041** to the proximal end **7049** in order to deform all of the distal staple legs **6221** of the staples **6220**. As the reader will note, the first anvil **7050** can be moved up and down relative to the undeformed proximal staple legs **6221** and, in order to accommodate such relative movement, in various embodiments, the first anvil **7050** can comprise one or more clearance slots **7057** (FIG. **230**) which can be configured to receive the unbent proximal staple legs **6221** as the first anvil **7050** bends the distal staple legs **6221**. Similarly, referring again to FIG. **228**, the second anvil **7060** can comprise a clearance slot **7067** which can be configured to accommodate the vertical movement of the first cam actuator **7051** which moves up and down as the first anvil **7050** is moved between its dwell and driven positions as described above. After all of the distal staple legs **6221** have been bent, in at least one embodiment, the second anvil **7060** can be moved from the proximal end **7049** of the frame **7041** to the distal end **7048** by the anvil actuator **7061**. Similar to the above, referring now to FIG. **235**, the cam followers **7065** of the second anvil **7060** can slide within the cam slots **7070** such that the second anvil **7060** is moved between dwell, or upper, positions and driven, or lower, positions in order to deform the proximal staple legs **6221** inwardly toward the centers of the staples **6220**, for example. Similar to the above, the second anvil **7060** can comprise a plurality of first forming, or camming, surfaces **7063** and a plurality of second forming, or camming, surfaces **7064** which can each be configured to at least partially deform and/or completely deform one or more of the proximal staple legs **6021**. Referring again to FIG. **229**, the second anvil **7060** can comprise a plurality of first forming surface **7063** and a plurality of second forming surfaces **7064** which can be configured to deform the proximal staple legs **6221** of staples **6220** arranged in a plurality of rows, or lines, for example. As also illustrated in FIG. **229**, the first forming surfaces **7063** and the second forming surfaces **7064** of the second anvil **7060** may not be aligned with the first forming surfaces **7053** and the second forming surfaces **7054** of the first anvil **7050** wherein, as a result, the proximal legs **6221** of the staples **6220** may be positioned in different rows, or lines, than the distal legs **6221** of the staples **6220**. As the reader will also note, the second anvil **7060** can push the first anvil **7050** as the second anvil **7060** is moved distally. In at least one such embodiment, the second anvil **7060** can push the first anvil **7050** back into the distal end **7048** of the frame **7041** such that the first anvil **7050** can be returned to its initial, or unfired, position. After all of the proximal staple legs **6221** of the staples **6220** have been deformed, the second anvil **7060** can be retracted proximally and returned to its initial, or unfired, position. In this way, the surgical stapler **7000** can be reset such that a new staple cartridge can be positioned in the first jaw **7030** and a new retention matrix can be positioned in the second jaw **7040** in order to use the surgical stapler **7000** once again.

In various embodiments, as described above, a surgical stapler can comprise two or more anvils which can travel longitudinally in order to engage the legs of a plurality of staples in a transverse direction. In certain embodiments, a surgical stapler can comprise an anvil which is moved proximally, for example, in order to deform a first group of staple legs and distally, for example, in order to deform a second group of staple legs. In at least one such embodiment, such an anvil can comprise forming surfaces facing proximally and forming surfaces facing distally, for example.

In various embodiments, referring now to FIG. **236**, an anvil, such as anvil **7140**, for example, can comprise a bottom, or tissue-contacting, surface **7141** and a plurality of forming pockets **7142** defined therein. In at least one embodiment, the anvil **7140** can comprise more than one plate, such as pocket plates **7143**, for example, which can be welded into a frame **7144**. In at least one such embodiment, each pocket plate **7143** can be positioned in a plate channel **7145** in the frame **7144** and welded to the frame **7144**

through a weld slot **7146** extending through the frame **7144** in order to form a longitudinal weld **7147**. In various circumstances, the longitudinal weld **7147** can comprise a continuous weld extending along the entire length of the weld slot **7146** or a series of spaced-apart spot welds extending along the length thereof, for example. In various embodiments, each pocket plate **7143** can comprise two or more plate portions that have been welded together. In at least one such embodiment, each pocket plate **7143** can comprise a first plate portion **7143***a* and a second plate portion **7143***b* which can be welded together along a seam **7148**. In various embodiments, the first plate portion **7143***a* and the second plate portion **7143***b* of each plate **7143** can be welded together before the plates **7143** are welded into the plate channels **7145** in the frame **7144**. In at least one such embodiment, the first plate portion **7143***a* and the second plate portion **7143***b* can comprise co-operating profiles, such as the toothed profiles illustrated in FIG. **236**, for example, which can be fitted together to form a tight seam **7148**. In at least one embodiment, each plate **7143** can comprise a height of approximately 0.02", for example, which can be taller than the depth of the plate channels **7145** such that the tissue-contacting surfaces **7141** thereof extend from the frame **7044** of the anvil **7040**. In certain embodiments, referring now to FIG. **237**, the plates **7143** can be connected together by at least one weld **7149** at the distal ends of the plates **7143**, for example.

As illustrated in FIGS. **236** and **237**, each pocket plate **7143** can comprise a plurality of forming pockets **7142** defined therein. In various embodiments, the forming pockets **7142** can be formed in the plates **7143** by any suitable manufacturing process, such as a grinding process and/or electrode-burning process, for example. In at least one such embodiment, referring now to FIGS. **238** and **239**, each forming pocket **7142** can be manufactured by first forming a deep well **7150**, then forming an arcuate or curved surface **7151** surrounding the deep well **7150**, and then forming a staple leg guide groove **7152** in the curved surface **7151**, for example. In various other embodiments, these steps can be performed in any suitable order. In various embodiments, referring now to FIG. **240**, the staple forming pockets **7142** can be formed such that the inner edges **7153** of the forming pockets are separated by a consistent, or at least substantially consistent, gap **7154**. In at least one such embodiment, the gap **7154** can be approximately 0.008", for example. Furthermore, in at least one such embodiment, the forming pockets **7142** can be positioned along two or more rows, or lines, the centerlines of which can be separated by a consistent, or at least substantially consistent, spacing **7155**. In at least one such embodiment, the spacing **7155** between the centerlines can be approximately 0.035", for example. In various embodiments, referring again to FIG. **240**, each forming pocket **7142** can taper between a narrow width **7156** and a wide width **7157**. In at least one such embodiment, the narrow width **7156** can be approximately 0.045" and the wide width **7157** can be approximately 0.075", for example. In various embodiments, the plates **7143** can be comprised of the same material as the frame **7144**. In at least one such embodiment, the plates **7143** and the frame **7144** can both be comprised of stainless steel, such as a 300 series or a 400 series stainless steel, for example, and/or titanium, for example. In various other embodiments, the plates **7143** and the frame **7144** can be comprised of different materials. In at least one such embodiment, the plates **7143** can be comprised of a ceramic material, for example, and the frame **7144** can be comprised of a stainless steel and/or titanium, for example. In various circumstances, depending on the materials used, at least one brazing process could be used to secure the plates **7143** in the frame **7144** in addition to or in lieu of the welding processes described above, for example.

In various embodiments, referring now to FIGS. **241-243**, an anvil **7240** can comprise a frame **7244** and a plurality of pocket plates **7243** which can be inserted into the frame **7244**. Similar to the above, each pocket plate **7243** can comprise a plurality of forming pockets **7242** defined therein. In at least one embodiment, the anvil frame **7244** can comprise retention slots **7246** defined therein which can each be configured to receive a retention rail **7247** extending from a pocket plate **7243**. In order to assemble the pocket plates **7243** to the anvil frame **7244**, the side walls **7245** of the anvil frame **7244** can be flexed or splayed outwardly, as illustrated in FIG. **242**, in order to widen the retention slots **7246** such that each retention slot **7246** can receive a retention rail **7247** of a pocket plate **7243** therein. Once the retention rails **7247** have been positioned in the retention slots **7246**, the side walls **7245** can be released, as illustrated in FIG. **243**, thereby allowing the frame **7244** to resiliently contract and/or return to its unflexed state. In such circumstances, the retention slots **7246** can contract and thereby capture the retention rails **7247** therein. In certain embodiments, the retention rails **7247** and/or the retention slots **7246** can comprise one or more co-operating tapered surfaces which, after the flexed retention slots **7246** have been released, can form a taper-lock engagement which can retain the retention rails **7247** in the retention slots **7246**. Similar to the above, the pocket plates **7243** can be comprised of the same material as or a different material than the frame **7244**. In at least one such embodiment, the plates **7243** can be comprised of a ceramic material, for example, and the frame **7244** can be comprised of a stainless steel and/or titanium, for example. In various circumstances, depending on the materials used, at least one brazing process and/or at least one welding process, for example, could be used to secure the plates **7243** in the frame **7244**.

In various embodiments, referring to FIGS. **259-262**, a staple cartridge, such as staple cartridge **21000**, for example, can comprise a cartridge body **21010** including a plurality of staple cavities **21011**, a plurality of staples **21030** removably positioned within the staple cavities **21011**, and a plurality of staple drivers **21090** which can be configured to eject the staples **21030** from the staple cavities **21011**. The staple cartridge **21000** can further include a pan, or retainer, **21070** which can be attached to the cartridge body **21010** to hold the staple drivers **21090** in position. In various embodiments, the retainer **21070** can include one or more lock arms **21071** which can be configured to engage the cartridge body **21010** and/or one or more lock windows **21072** configured to receive one or more protrusions, or bumps, **21018** extending from the cartridge body **21010**. In various embodiments, the retainer **21070** and/or the cartridge body **21010** can include one or more features configured to secure the staple cartridge **21000** within a cartridge channel **21040** of a surgical stapler. In use, a sled **21080** can be configured to traverse a longitudinal cavity defined within the cartridge body **21010** in order to lift the staple drivers **21090** and the staples **21030** upwardly toward an anvil, such as anvil **21060**, for example, positioned opposite the staple cartridge **21000**. In various embodiments, the surgical stapler can further comprise a shaft **21050** including a firing member **21052** which can be advanced longitudinally to engage the sled **21080** and advance the sled **21080** distally. In at least one such embodiment, the shaft **21050** can include an outer housing **21051**, an articulation joint **21057**, and/or one or more articulation control arms **21059** which can be config-

ured to articulate the end effector of the surgical instrument. Various systems for advancing the outer housing **21051** to close the anvil **20060** and various systems for operating the articulation control arms **21059** are described in a contemporaneously-filed, co-pending U.S. patent application Ser. No. 13/241,629, entitled SURGICAL INSTRUMENT WITH SELECTIVELY ARTICULATABLE END EFFECTOR, now U.S. Patent Application Publication No. 2012/0074200, the entire disclosure of which is incorporated by reference herein.

In various embodiments, referring primarily to FIG. **259**, the cartridge body **21010** can be curved. In at least one embodiment, the cartridge body **21010** can be curved with respect to a longitudinal axis, such as longitudinal axis **21019**, for example. In at least one such embodiment, the cartridge body **21010** can include a linear proximal portion which can define the longitudinal axis **21019** and an intermediate portion and a distal portion which can curve laterally with respect to the axis **21019**, for example. In some embodiments, the proximal portion of the cartridge body **21010** can curve laterally with respect to the longitudinal axis **21019**. Referring to FIGS. **259** and **260**, the cartridge body **21010** can include a longitudinal slot **21015** defined therein which can be configured to permit a cutting member **21053** of the firing member **21052** to pass therethrough. In at least one embodiment, the longitudinal slot **21015** can define a curved axis and/or centerline of the cartridge body **21010**. As illustrated in FIG. **259**, the retainer **21070** attached to the cartridge body **21010** can also include a curved longitudinal slot **21075** which can parallel, or at least substantially parallel, the longitudinal slot **21015** defined in the cartridge body **21010**. Similarly, the cartridge channel **21040** can include a curved longitudinal slot **21045** which can parallel, or at least substantially parallel, the longitudinal slot **21015** defined in the cartridge body **21010**. In various embodiments, referring to FIGS. **259** and **260**, the firing member **21052** can be configured to flex or bend as it traverses the slots **21015**, **21045**, and **21075** when the firing member **21052** is advanced distally through the staple cartridge **21000**. In at least one embodiment, the firing member **21052** can include apertures **21054** defined therein which can be configured to permit the firing member **21052** to bend as it passes through the curved cartridge body **21010**. In various embodiments, at least a portion of the firing member **21052** can be fabricated such that it is pre-curved, i.e., curved before it is inserted into the cartridge body **21010**. In at least one such embodiment, the distal knife portion **21053** of the firing member **21052** can be manufactured such that it is defined by a radius of curvature which is equal to, or at least substantially equal to, the radius of curvature which defines the longitudinal slots **21015**, **20145**, and **21075**.

In various embodiments, the proximal portion, the intermediate portion, and/or the distal portion of the cartridge body **21010** can curve in the same direction or in different directions. In some embodiments, the proximal portion, the intermediate portion, and/or the distal portion of the cartridge body **21010** can be defined along the same radius of curvature or different radiuses or curvature. In various embodiments, referring primarily to FIG. **259**, the staple cavities **21011** can be arranged in several curved rows. In at least one embodiment, the cartridge body **21010** can include a first row of staple cavities **21011** arranged along a first radius of curvature **21011***a*, a second row of staple cavities **21011** arranged along a second radius of curvature **21011***b*, a third row of staple cavities **21011** arranged along a third radius of curvature **21011***c*, and/or a fourth row of staple cavities **21011** arranged along a fourth radius of curvature **21011***d*, for example. In various other embodiments, additional rows of staple cavities are contemplated. Each staple cavity **21011** within the first row of staple cavities **21011** can comprise, or can be defined by, a longitudinal axis which extends between a proximal end and a distal end thereof wherein, as a result of the curved arrangement of the staple cavities **21011** within the first row, the longitudinal axes of the staple cavities **21011** within the first row may not be collinear and may extend at transverse angles with respect to each other. Longitudinal axes **21019***a* for some of the staple cavities **21011** are illustrated in FIG. **260**. Similarly, each staple cavity **21011** within the second row of staple cavities **21011** can comprise, or can be defined by, a longitudinal axis which extends between a proximal end and a distal end thereof wherein, as a result of the curved arrangement of the staple cavities **21011** within the second row, the longitudinal axes of the staple cavities **21011** within the second row may not be collinear and may extend at transverse angles with respect to each other. Also, each staple cavity **21011** within the third row of staple cavities **21011** can comprise, or can be defined by, a longitudinal axis which extends between a proximal end and a distal end thereof wherein, as a result of the curved arrangement of the staple cavities **21011** within the third row, the longitudinal axes of the staple cavities **21011** within the third row may not be collinear and may extend at transverse angles with respect to each other. Furthermore, each staple cavity **21011** within the fourth row of staple cavities **21011** can comprise, or can be defined by, a longitudinal axis which extends between a proximal end and a distal end thereof wherein, as a result of the curved arrangement of the staple cavities **21011** within the fourth row, the longitudinal axes of the staple cavities **21011** within the fourth row may not be collinear and may extend at transverse angles with respect to each other.

Further to the above, the first radius of curvature **21011***a* which defines the first row of staples **21011** can be larger than the second radius of curvature **21011***b* which defines the second row of staples **21011**. In various embodiments, the second radius of curvature **21011***b* which defines the second row of staples **21011** can be larger than the radius of curvature which defines the curved longitudinal slot **21015**. In at least one such embodiment, the radius of curvature which defines the curved longitudinal slot **21015** can be larger than the radius of curvature **21011***c* which defines the third row of staples **21011**. Similarly, the radius of curvature **21011***c* which defines the third row of staples **21011** can be larger than the fourth radius of curvature **21011***d* which defines the fourth row of staples **21011**. In various embodiments, referring again to FIG. **259**, the staple cartridge **21000** can further include a tissue thickness compensator **21020** which can be positioned above the top deck surface **21012** of the cartridge body **21010**. Similar to the above, the tissue thickness compensator **21020** can be retained to the cartridge body **21010** in any suitable manner and, in at least one embodiment, the tissue thickness compensator **21020** can be engaged with the legs of the staples **21030** extending upwardly from the top deck surface **21012**. Also similar to the above, the tissue thickness compensator **21020** can be captured within the staples **21030** when the staples **21030** are fired, i.e., pushed against the anvil **21060** by the sled **21080**, and can provide various benefits such as applying a compressive force to the stapled tissue and compensating for changes in tissue thickness along the length of the staples rows, among other benefits. In such embodiments, the tissue thickness compensator **21020** can comprise a portion of the staple cartridge **20000** which is implanted. In at least one

such embodiment, the tissue thickness compensator **21020** of the staple cartridge **20000** can hold the tips of the staples **21030** in position when the staples **21030** are in an unfired state.

In various embodiments, the cartridge body **21010** can comprise an inner curved portion **21013** which can be defined by a radius of curvature which, in at least one embodiment, is less than the radius of curvature **21011***d* which defines the fourth row of staple cavities **21011**. In at least one such embodiment, the tissue thickness compensator **21020** can comprise a side which parallels, substantially parallels, matches, and/or matches the curvature of the inner curved portion **21013**. When the tissue thickness compensator **21020** is positioned above and/or against the top deck surface **21012** of the cartridge body **21010**, the inner curved portion of the tissue thickness compensator **21020** can be aligned, or at least substantially aligned, with the inner curved portion **21013** of the cartridge body **21010**. Similarly, the cartridge body **21010** can comprise an outer curved portion **21014** which can be defined by a radius of curvature which, in at least one embodiment, is greater than the radius of curvature **21011***a* which defines the first row of staple cavities **21011**. In at least one such embodiment, the tissue thickness compensator **21020** can comprise a side which parallels, substantially parallels, matches, and/or matches the curvature of the outer curved portion **21014**. When the tissue thickness compensator **21020** is positioned above and/or against the top deck surface **21012** of the cartridge body **21010**, the outer curved portion of the tissue thickness compensator **21020** can be aligned, or at least substantially aligned, with the outer curved portion **21014** of the cartridge body **21010**.

As discussed above, the staple cavities **21011** can be arranged along curved rows in the cartridge body **21010**. In various embodiments, the staple drivers **21090** can each be configured to be movably positioned within the staple cavities **21011** such that ramps **21081** defined on the sled **21080** can slide underneath the staple drivers **21090** and lift the staple drivers **21090**, and the staples **21030** supported thereon, from an unfired position to a fired position. In some embodiments, the staple drivers **21090** can each be configured to support one staple **21030** thereon. In at least one such embodiment, the staple drivers **21090** can be loaded into the staple cavities **21011** and can be oriented at different angles with respect to each other. In certain other embodiments, the staple drivers **21090** can each be configured to support more than one staple **21030** thereon. In at least one such embodiment, the staple drivers **21090** can be curved to match the radius of curvature, or radiuses of curvature, which define the staple rows in which the staples **20030** supported thereon are positioned. In various embodiments, the ramps **21081** of the sled **21080** may be linear while, in some embodiments, the ramps **21081** may be curved. In at least one such embodiment, the ramps **21081** can be curved such that they parallel, substantially parallel, match, and/or substantially match one or more radiuses of curvature which define the staple rows. In various embodiments, the lateral portions of the sled **21080** can be curved such that they are parallel to, substantially parallel to, match, and/or substantially match curved sidewalls defined within the cartridge body **21010**. In at least one such embodiment, further to the above, the sled **21080** can traverse a longitudinal cavity defined within the cartridge body **21010** as the sled **21080** is advanced from the proximal end of the staple cartridge **21000** to the distal end of the staple cartridge **21000** wherein the inner and outer sidewalls of this longitudinal cavity can be curved to match the curvature of the cartridge body **21010**. In such embodiments, the lateral sides of the sled **21080** can be curved to parallel, substantially parallel, match, and/or substantially match the curvature of these sidewalls. In any event, the curved sled **21080**, ramps **21081**, and/or staple drivers **21090** can be curved to facilitate the ejection of the staples **21030** from the staple cavities **21011** and reduce the possibility of binding and/or jamming within the staple cartridge **21000** and/or the surgical stapling instrument.

In various embodiments, referring now to FIG. **244**, a surgical stapling instrument can comprise a shaft **20050** and an end effector including a support jaw **20040** and a movable anvil jaw **20060**. The surgical stapling instrument can further comprise a firing system configured to advance and/or retract a firing member **20052** relative to the end effector. Exemplary firing systems are disclosed above and, in addition, other exemplary firing systems are disclosed in contemporaneously-filed, commonly-owned U.S. patent application Ser. No. 13/241,637, entitled SURGICAL INSTRUMENT WITH TRIGGER ASSEMBLY FOR GENERATING MULTIPLE ACTUATION MOTIONS, now U.S. Pat. No. 8,789,741, the entire disclosure of which is incorporated by reference herein. As illustrated in FIGS. **244** and **245**, the support jaw **20040** can be configured to receive and support a staple cartridge, such as staple cartridge **20000**, for example, which can include a cartridge deck **20010**, a plurality of staples **20030** removable retained within the deck **20010**, and a tissue thickness compensator **20020**. As described in greater detail further below, the firing member **20052** can be advanced distally toward the distal ends of jaws **20040** and **20060** in order to, one, move the anvil jaw **20060** into a closed position to compress tissue against the tissue thickness compensator **20020**, two, deform the staples **20030**, and/or, three, incise the tissue.

In various embodiments, referring again to FIGS. **244** and **245**, the anvil **20060** can comprise a proximal end **20065**, a distal end **20066**, and a longitudinal slot **20064** extending therebetween. Similarly, the support jaw **20040** can further comprise a longitudinal slot **20045** extending therethrough. As described in greater detail below, the slots **20064** and **20045** can be configured to receive at least a portion of the firing member **20052** therein as the firing member **20052** is advanced distally and/or retracted proximally. In at least one such embodiment, the slots can comprise closed distal ends, such as distal end **20068**, for example, which can limit the travel of the firing member **20052**. In various embodiments, referring again to FIG. **244**, the shaft **20050** can comprise an articulation joint **20057** which can permit the end effector of the surgical instrument, including jaws **20040** and **20060**, to articulate relative to a portion of the shaft **20050**. Similar to the above, the shaft **20050** can comprise an outer housing **20051** and control arms **20059** slidably housed therein wherein each control arm **20059** can include an attachment member **20058** engaged with the support jaw **20040** of the end effector, for example, and can be configured to push and/or pull the end effector to rotate it in certain directions. Referring primarily to FIG. **246**, the cartridge deck **20010**, in various embodiments, can be comprised of any suitable material, such as those materials described throughout this application, for example, and can have any suitable geometry. In the illustrated embodiment, the cartridge deck **20010** comprises a substantially rectangular body having longitudinal channels **20016** extending therethrough.

As outlined above, the staple cartridge **20000** can include a deck **20010** and a plurality of staples **20030** at least partially contained within the deck **20010**. Referring primarily to FIGS. **245** and **246**, the deck **20010** can include a plurality of apertures or through holes **20013** which can each

be configured to receive at least a portion of a staple **20030** therein. In at least one embodiment, each staple **20030** can comprise a base **20031** and two legs **20032** extending from the base **20031** in a substantially U-shaped or V-shaped configuration, for example. In various embodiments, each deck aperture **20013** can comprise guide slots or grooves **20015** at the proximal and distal ends thereof which can be configured to slidably receive the legs **20032** of a staple **20030** therein. As illustrated in FIG. **246**, the deck **20010** can further include a top surface **20012** and a plurality of projections, or guides, **20014** extending upwardly from the top surface **20012**. In at least one embodiment, the guides **20014** can extend around or surround the proximal and/or distal ends of each aperture **20013**. In various embodiments, the guide slots **20015** can extend upwardly through the guides **20014**. In certain embodiments, each guide slot **20015** can be defined along an axis which is vertical. In at least one such embodiment, each guide slot **20015** can be defined along an axis which is perpendicular to a plane defined by the top surface **20012** of the deck **20010**. In certain other embodiments, the guide slots **20015** can be defined along axes which are not vertical. In at least one such embodiment, each guide slot **20015** can be defined along an axis which is transverse or skew to a plane defined by the top surface **20012** of the deck **20010**. In either event, the legs **20032** of the staples **20030** can be resiliently biased into the guide slots **20015**. In such embodiments, the distance between the legs **20032** in their unflexed condition can be wider than the distance between the guide slots **20015** such that the legs **20032** are resiliently flexed inwardly when the staples **20030** are positioned in the apertures **20013**. In at least one such embodiment, a tip distance can be defined between the tips of the staple legs **20032** which is wider than the width of the apertures **20013** and/or wider than the width between the guide slots **20015**. In order to assemble such a staple cartridge, in various embodiments, the legs **20032** can be biased inwardly when the staples **20030** are positioned within the apertures **20013** and, as a result of friction forces created between the staple legs **20032** and the cartridge deck **20010**, the staples **20030** can be held in position.

In various embodiments, further to the above, the guide slots **20015** can be configured to prevent, or at least limit, relative movement between the staples **20030** and the cartridge deck **20010**. In at least one embodiment, the sidewalls of the guide slots can be configured such that the legs **20032** of the staples **20030** are closely received therebetween and, as a result, lateral movement between the staple legs **20032** and the cartridge deck **20010** can be prevented, or at least limited. Similarly, further to the above, relative longitudinal movement between the staple legs **20032** and the cartridge deck **20010** can be prevented, or at least limited, as the legs **20032** can be resiliently biased against proximal and distal end walls of the guide slots **20015**. In various embodiments, as a result, relative movement between the staples **20030** and the cartridge deck **20010** can be limited to movement along a deployment axis toward the anvil positioned opposite the staple cartridge **20000**.

Referring again to FIG. **246**, the staples **20030** can be assembled into the apertures **20013** of the deck **20010** such that the staples **20030** are removably retained in an unfired position relative to the deck **20010**. When the staple cartridge **20000** is installed, inserted, and/or assembled into the support jaw **20040**, referring to FIG. **244**, the bases **20031** of the staples **20030** can be aligned with stationary staple drivers **20043** extending upwardly from a bottom surface **20042** of the support jaw **20040**, as illustrated in FIGS. **245** and **251**, for example. In various embodiments, the stationary staple drivers **20043** may be immovable relative to the support jaw **20040** and can be fixed in position. In certain embodiments, the stationary staple drivers **20043** can be integrally formed with the support jaw **20040** and, in at least one embodiment, the support jaw **20040** and the stationary staple drivers **20043** can be machined from a unitary piece of material, such as stainless steel or titanium, for example. In certain embodiments, the stationary drivers **20043** can be affixed or joined to the support jaw **20040** in any suitable manner, such as by welding and/or an adhesive, for example. In any event, the bases **20031** can be positioned over the top surfaces of the stationary drivers **20043** such that the stationary drivers **20043** can support the staples **20030** as the staples **20030** are being deformed, as described in greater detail further below. In various embodiments, referring primarily to FIG. **245**, each stationary driver **20043** can include a support groove or slot **20044** defined therein which can be configured to at least partially receive a base **20031** of a staple **20030** therein. In at least one embodiment, the depth of the support grooves **20044** can be greater than the diameter of the staple bases **20031** positioned therein. In at least one such embodiment, the base **20031** can be completely positioned within the support groove **20044**. In certain other embodiments, the depth of the support grooves **20044** can be less than the diameter of the staple bases **20031** positioned therein. In at least one such embodiment, the top of each staple base **20031** can extend above the top surface of its corresponding stationary driver **20043**. In any event, each support groove **20044** can comprise a contour configured to match, or at least substantially match, the contour of the staple base **20031** positioned therein. In at least one such embodiment, the support grooves **20044** can be at least partially defined by a radius of curvature which equals, or at least substantially equals, the radius of curvature which defines the bottom of the staple bases **20031**. In certain other embodiments, the support grooves **20044** can be at least partially defined by a radius of curvature which is greater than the radius of curvature that defines the bottom of the staple bases **20031**, for example. While the staples **20030** may be formed from wire having a round, or at least substantially round, outer circumference, in various embodiments, other circumferences, such as square, oval, and/or rectangular circumferences, for example, are envisioned. In such embodiments, the support grooves defined in the stationary drivers **20043** can comprise square, oval, and/or rectangular profiles, respectively, configured to receive the bases of the staples.

In various embodiments, further to the above, the stationary drivers **20043** and the support grooves **20044** defined therein can be arranged such that they are parallel to a longitudinal slot **20018** extending through the cartridge deck **20010**. In such embodiments, the staples **20030** can be arranged in linear, or at least substantially linear, rows, or rows in which the staples **20030** are arranged in an end-to-end manner. In various other embodiments, the stationary drivers **20043** and/or the support grooves **20044** can be arranged along axes which extend transversely to the longitudinal slot **20018**. In such embodiments, the staples **20030** can be arranged in rows which are not in an end-to-end arrangement.

As illustrated in FIG. **251**, which illustrates the staple cartridge **20000** in an unfired condition, the bases **20031** of the staples **20030** can be supported by the bottom surfaces of the support grooves **20044** defined within the stationary drivers **20043**. In such circumstances, the weight of the staple cartridge **20000** can be supported by the stationary drivers **20043**. As also illustrated in FIG. **251**, the stationary

drivers **20043** can extend upwardly into the apertures **20013** of the deck **20010** when the staple cartridge **20000** is in an unfired condition. In this unfired condition, the deck **20010** is positioned above a well, cavity, or depression **20046** which is defined between the stationary staple drivers **20043**. In various embodiments, a lateral gap can exist between the sidewalls of the apertures **20013** and the outer perimeter of the stationary drivers **20043**. In such embodiments, a certain amount of relative lateral movement between the deck **20010** and the stationary drivers **20043** is afforded by these lateral gaps. In certain other embodiments, the sidewalls of the apertures **20013** can be in contact with the perimeter of the stationary drivers **20043**. In such embodiments, an interference fit can be present between the stationary drivers **20043** and the sidewalls of the apertures **20013**. In various embodiments, as described in greater detail below, the deck **20010** can slide relative to the stationary drivers **20043** as the staple cartridge **20000** is being fired. In the embodiments where there is an interference fit between the drivers **20043** and the sidewalls of the apertures **20013**, the deck **20010** can slide down the stationary drivers **20043** against friction forces acting between the deck **20010** and the stationary drivers **20043**. In certain embodiments, the stationary drivers **20043** can comprise an untapered profile such that each stationary driver **20043** has a constant, or at least substantially constant, outer profile, or circumference, along the height thereof. In at least one such embodiment, the friction forces present between the deck **20010** and the stationary drivers **20043** can be constant, or at least substantially constant, as the deck **20010** is moved downwardly. In certain other embodiments, the stationary drivers can comprise a tapered profile such that each stationary driver **20043** has an outer profile, or circumference, which changes along the height thereof. In at least one such embodiment, the bases of the stationary drivers **20043**, or the portions of the stationary drivers **20043** closest to the bottom surface **20042** of the support jaw **20040**, can be wider than the tops of the stationary drivers **20043**. In such embodiments, the friction forces present between the deck **20010** and the stationary drivers **20043** can increase as the deck **20010** is pushed downwardly toward the bottom surface **20042**. In any event, an interference fit between the deck **20010** and the stationary drivers **20043**, and/or any other portion of support jaw **20040**, can hold or retain the staple cartridge **20000** in position until it is fired, as described in greater detail further below.

Referring again to FIG. **246**, the legs **20032** of the staples **20030** can extend above the deck surface **20012** and/or the staple guides **20014** when the staple cartridge **20000** is in an unfired configuration. Referring to FIG. **251**, the staple cartridge **20000** can further comprise a tissue thickness compensator **20020** which can be positioned adjacent to and/or against the top deck surface **20012** of the deck **20010**. In various embodiments, the legs **20032** of the staples **20030** can extend upwardly into the tissue thickness compensator **20020**. In at least one such embodiment, the tissue thickness compensator **20020** can be assembled to the staple cartridge **20000** by positioning the bottom surface **20022** of the tissue thickness compensator **20020** over the top deck surface **20012** of the deck **20010** and then inserting the staples **20030** through the openings **20013** from the bottom side **20017** of the deck **20010**. In at least one such embodiment, an adhesive can be utilized to hold the tissue thickness compensator **20020** to the cartridge deck **20010**. In certain other embodiments, the staples **20030** can be inserted into the openings **20013** and then the tissue thickness compensator **20020** can be pressed downwardly onto the staples **20030**. In either event, the tips of the staple legs **20032** can be configured to penetrate the tissue thickness compensator **20020** and, in at least one embodiment, the staple legs **20032** can each comprise a sharp, beveled tip, for example, which can pierce the tissue thickness compensator **20020**. The reader will note that, when comparing FIGS. **246** and **251**, the staple cartridge **20000** is illustrated with a tissue thickness compensator **20020** in FIG. **251** and without a tissue thickness compensator **20020** in FIG. **246**. While the removal of the tissue thickness compensator **20020** in FIG. **246** has been done for the purposes of illustrating various aspects of the staple cartridge **20000**, various embodiments are envisioned in which a staple cartridge could be utilized without a tissue thickness compensator. In at least one such embodiment, the tips of the staple legs **20032** may not extend above the staple guides **20014** of the deck **20010**.

In various embodiments, referring to FIG. **246**, the support jaw **20040** can include a distal end **20048** which can be configured to provide a guide for positioning the staple cartridge **20000** within the support jaw **20040**. In at least one embodiment, the distal end of the cartridge deck **20010** can be aligned with the distal end **20048** and, in such a position, the bases **20031** of the staples **20030** can be aligned with the support grooves **20044**. In certain embodiments, the distal end **20048** can limit the distal movement of the staple cartridge **20000**. In any event, once the staple cartridge **20000** has been inserted into the support jaw **20040**, referring now to FIG. **247**, tissue, such as vessel V, for example, can be positioned intermediate the anvil jaw **20060** and the staple cartridge **20000**. As illustrated in FIGS. **247** and **248**, the anvil jaw **20060** is movable between an open position (FIG. **247**) and a partially-closed position (FIG. **248**) wherein, as described in greater detail further below, the surgical stapling instrument can include a firing member **20052** which can be advanced distally to engage the anvil jaw **20060** and rotate the anvil jaw **20060** toward the staple cartridge **20000** and the support jaw **20040**. In at least one such embodiment, the firing member **20052** can comprise a top cam driver **20054** and a bottom cam driver **20055** which can be configured to engage the anvil jaw **20060** and the support jaw **20040**, respectively. More particularly, the firing member **20052** can be advanced from an unfired position (FIG. **247**) in which the cam drivers **20054** and **20055** are not engaged with the jaws **20040** and **20060** to a partially-advanced position (FIG. **248**) in which the top cam driver **20054** is in contact with a cam surface **20062** on the anvil jaw **20060** and the bottom cam driver **20055** is in contact with a cam surface **20039** on the support jaw **20040**. As the firing member **20052** is progressed distally, the anvil jaw **20060** can be moved toward the support jaw **20040** thereby bringing a tissue-contacting surface **20061** into contact with the vessel V, and/or any other suitable tissue positioned between the jaws **20040** and **20060**. In at least one such embodiment, the top cam driver **20054** can slide relative to the cam surface **20062** and cam the anvil jaw **20060** toward the staple cartridge **20000** until the top cam driver **20054** reaches the top, or outer, surface **20038** of the anvil jaw **20060**. Similarly, the bottom cam driver **20055** can slide relative to the cam surface **20039** until the bottom cam driver **20055** reaches the bottom, or outside, surface **20037** of the support jaw **20040**. In certain embodiments, the bottom cam driver **20055** can reach the bottom surface **20037** of the support jaw **20040** before the top cam driver **20054** reaches the top surface **20038** of the anvil jaw **20060**. In certain embodiments, the bottom cam driver **20055** can reach the bottom surface **20037** of the support jaw **20040** after the top cam driver **20054** reaches the top surface **20038** of the anvil

jaw **20060**. In certain other embodiments, the bottom cam driver **20055** can reach the bottom surface **20037** at the same time that the top cam driver **20054** reaches the top surface **20038**. In any event, once the cam drivers **20054** and **20055** have reached their respective surfaces **20038** and **20037**, the anvil jaw **20060** can be in a fully closed position.

In various embodiments, further to the above, a surgeon can utilize the surgical stapling instrument to grasp, manipulate, and/or otherwise evaluate the tissue positioned between the jaws **20040** and **20060**. In at least one such embodiment, the surgeon may only partially advance the firing member **20052** such that the anvil **20060** is only moved to a partially-closed position, as illustrated in FIG. **248**. In the event that the surgeon wishes to re-evaluate the positioning of the end effector, the surgeon may retract the firing member **20052** thereby allowing the anvil **20060** to return to an open position. In various embodiments, the surgical instrument can further include a spring configured to bias the anvil **20060** into an open position such that the anvil jaw **20060** can return to an open position after the firing member **20052** has been retracted. In such embodiments, the surgeon can partially close and re-open the anvil **20060** as many times as appropriate in order to properly position the tissue between the anvil jaw **20060** and the staple cartridge **20000**. FIGS. **253** and **254** depict an end view of the anvil jaw **20060** being moved between an open position and an at least partially-closed position. When the anvil jaw **20060** is in the partially-closed position illustrated in FIG. **248**, the reader will note that the vessel V has distorted from the compression force applied thereto; however, the reader will also note that the tissue thickness compensator **20020** has not distorted, or at least substantially distorted, from the same compression force. The reader will also note that the tissue T in FIG. **253** can be distorted when it is compressed by an at least partially closed anvil jaw **20060**, as illustrated in FIG. **254**, although the tissue thickness compensator **20020** may remain undistorted. In some such embodiments, the tissue thickness compensator **20020** can comprise a modulus of elasticity that is greater than the modulus of elasticity of the tissue T and/or the vessel V positioned between the tissue thickness compensator **20020** and the tissue contacting surface **20061** of the anvil jaw **20060**. Such embodiments can allow the tissue and/or vessel to be compressed and/or manipulated without pushing the tissue or vessel against the tips of the staples **20030** embedded within the tissue thickness compensator **20020**. As the anvil **20060** is pushed closer toward the support jaw **20040**, as illustrated in FIG. **249**, the tissue thickness compensator **20020** can compress downwardly toward the deck **20010**. In such circumstances, depending on the height of the staple legs **20032**, the tips of the staple legs **20032** may or may not at least partially pierce the tissue or vessel. In either event, referring now to FIG. **250**, the firing member **20052** can be further advanced toward the distal end of the end effector to fire the staple cartridge **20000**, as described in greater detail below.

As discussed above, the cartridge deck **20010** can be slid downwardly toward the bottom surface **20042** of the support jaw **20040** as the staple cartridge **20000** is being fired. Referring to FIGS. **248** and **249**, the reader will note that the cartridge deck **20010** is moved from an unfired position (FIG. **248**) to a fired position (FIG. **249**) as the firing member **20052** is advanced distally. The movement of the cartridge deck **20010** between an unfired position and a fired position is also illustrated in FIGS. **251** and **252** and, in addition, in FIGS. **254** and **255**. Upon comparing FIGS. **251** and **252**, the cartridge deck **20010** can be pushed downwardly into the well **20046** as the staples **20030** are being deformed. More specifically, as the anvil jaw **20060** is pushed downwardly toward the support jaw **20040**, the tissue contacting surface **20061** can contact tissue positioned intermediate the tissue contacting surface **20061** and the top surface **20021** of the tissue thickness compensator **20020** and push the tissue downwardly toward the support jaw **20040**. This compressive force can also push the top surface **20021** of the tissue thickness compensator **20020** downwardly toward the support jaw **20040** thereby compressing the tissue thickness compensator **20020**. As the tissue thickness compensator **20020** is compressed, the top surface **20021** can be pushed below the tips of the staple legs **2002** such that the staple legs **20032** emerge from the tissue thickness compensator **20032** and pierce the tissue. Further downward movement of the anvil **20060** can position one or more forming surfaces on the anvil jaw **20060** against the staple legs **20032**. In various embodiments, the anvil jaw **20060** can comprise a plurality of forming pockets **20063** which can be configured to receive the staple legs **20032** of the staples **20030** and bend or curl the staple legs **20032** downwardly, for example. Ultimately, the anvil jaw **20060** can be pushed downwardly until the staples **20030** have been sufficiently deformed, or fired.

In various embodiments, further to the above, the anvil jaw **20060** can be moved toward the support jaw **20040** until the staples **20030** have been deformed, or fired, to a desired height. In various embodiments, the firing member **20052** can be advanced distally to push the anvil **20060** downwardly until the desired deformed height of the staples **20030** has been reached. In at least one circumstance, the firing member **20052** can push the anvil jaw **20060** to its final height when the upper cam driver **20054** has reached the top surface **20038** of the anvil jaw **20060** and the bottom cam driver **20055** has reached the bottom surface **20039** of the support jaw **20040**. In such circumstances, the movement of the anvil jaw **20060** to its fully-closed position is sufficient to fully form the staples **20030** to their desired deformed height. In at least one such circumstance, all of the staples **20030** can be deformed to their desired height simultaneously. In various circumstances, the anvil **20060** can be rotated between its open position and its closed position wherein the rotation of the anvil jaw **20060** can be centered about an axis defined by closure pins **20069** extending from the anvil jaw **20060**. Referring primarily to FIG. **245**, the closure pins **20069** can extend from the lateral sides of the anvil jaw **20060** and can be positioned along an axis of rotation. In various embodiments, the support jaw **20040** can include pin slots **20049** defined in opposite sides thereof which are each configured to receive a pin **20069** therein. As described in greater detail below, the pins **20069** can rotate and/or translate within the pin slots **20049**. When the anvil jaw **20060** is moved from an open position to a partially-closed position as illustrated in FIGS. **247** and **248**, in at least one embodiment, the anvil jaw **20060** can be rotated about the pins **20069** after being contacted by the advancing firing member **20052**. Along these lines, the reader will note that the closure pins **20069** have remained in the top portions of the pin slots **20049** which indicates that, in the current circumstances, the anvil jaw **20060** has not yet been translated downwardly. Various other circumstances are envisioned in which the anvil jaw **20060** is translated in addition to or in lieu of being rotated as it is moved from its open position to a partially-closed position. Upon comparing FIGS. **248** and **249**, the reader will note that the firing member **20052** has been advanced distally and that the anvil jaw **20060** has been moved further toward the support jaw **20040**. While the anvil jaw **20060** has been rotated between

its position in FIG. **248** and its position in FIG. **249**, the anvil **20060** has also translated toward the support jaw **20040**, as evidenced by the downward movement of the pins **20069** in the pin slots **20049**.

As outlined above, the pins **20069** of the anvil jaw **20060** may slide downwardly within the pin slots **20049** of the support jaw **20040** when the anvil jaw **20060** is moved between its position in FIG. **248** and its position in FIG. **249**. In various embodiments, each pin slot **20049** can be defined along a longitudinal axis **20068** and can be configured to limit the movement of the pins **20069** along a straight line, or an at least substantially straight line. In at least one embodiment, the longitudinal axes **20068** can be perpendicular, or at least substantially perpendicular, to the bottom surface **20042** of the support jaw **20040**. In such embodiments, the anvil jaw **20060** can move in a parallel, or an at least substantial parallel, path toward the bottom surface **20042** of the support jaw **20040**. More particularly, in at least one embodiment, the tissue-contacting surface **20061** can comprise a flat, or planar, surface which can be moved downwardly toward the support jaw **20040** such that the tissue-contacting surface **20061** remains parallel, or at least substantially parallel, to a planar surface defining the bottom surface **20042**. In various embodiments, the tissue-contacting surface **20061** can be moved downwardly toward the top surface **20021** of the tissue thickness compensator **20020** such that the tissue-contacting surface **20061** remains parallel, or at least substantially parallel, to the top surface **20021**. In certain embodiments, the tissue-contacting surface **20061** can be moved downwardly toward the deck surface **20012** of the cartridge deck **20010** such that the tissue-contacting surface **20061** remains parallel, or at least substantially parallel, to the deck surface **20012**. In at least one embodiment, the deck **20010** can be pushed downwardly such that the bottom surface **20017** of the deck **20010** remains parallel, or at least substantially parallel, to the bottom surface **20042** of the support jaw **20040**. In various embodiments, further to the above, the longitudinal axes **20068** can extend transversely with respect to the bottom surface **20042** of the support jaw **20040**, the deck surface **20012** of the cartridge deck **20010**, and/or the top surface **20021** of the tissue thickness compensator **20020**, for example. In certain embodiments, the top surface **20038** of the anvil jaw **20060** can be parallel to the tissue contacting surface **20061** of the anvil jaw **20060** and, similarly, the outer surface **20038** of the support jaw **20040** can be parallel to the bottom surface **20042** of the support jaw **20040**.

In various embodiments, further to the above, the anvil jaw **20060** can float downwardly as it is closed. The anvil jaw **20060** can translate and/or rotate downwardly such that the tissue-contacting surface **20061** of the anvil jaw **20060** moves downwardly in a level, or at least substantially level, manner. When the anvil jaw **20060** is level as it is closed, in certain embodiments, the forming pockets **20063** of the anvil jaw **20060** can deform all, or at least nearly all, of the staples **20030** at the same time. Furthermore, in at least some embodiments, the forming pockets **20063** can deform all, or at least nearly all, of the staples **20030** to the same, or at least substantially the same, height, as the anvil is floated downwardly. The anvil **20060** can also float as the firing member **20052** is advanced distally and/or retracted proximally. In various embodiments, the anvil **20060** can tilt proximally and/or distally and/or otherwise adjust as the staple cartridge **20000**, for example, is being fired.

In various embodiments, further to the above, the longitudinal axes **20068** can be perpendicular, or at least substantially perpendicular, to a plane defined by the top surfaces of the stationary staple drivers **20043**. In such embodiments, the anvil jaw **20060** can move in a parallel, or an at least substantial parallel, path toward this plane. More particularly, in at least one embodiment, the tissue-contacting surface **20061** can comprise or define a flat, or planar, surface which can be moved downwardly toward the support jaw **20040** such that the tissue-contacting surface **20061** remains parallel, or at least substantially parallel, to the top surfaces of the stationary staple drivers **20043**. In certain embodiments, however, not all of the top surfaces of the stationary staple drivers **20043** may lie in the same plane. In some embodiments, the stationary staple drivers **20043** may have different heights and, thus, the top surfaces of the staple drivers **20043** may lie within different planes. In at least one embodiment, the stationary staple drivers **20043** within a first row may have a first height and the stationary staple drivers **20043** within a second row may have a second height. In at least one such embodiment, the tips of the staples **20030** supported by such stationary staple drivers **20043** can be supported at different heights with respect to the bottom surface **20042** of the support jaw **20040** in their unfired position. In such circumstances, especially in embodiments in which all of the staples **20030** have the same or at least substantially the same unfired height, the staples **20030** supported by taller stationary staple drivers **20043** can be deformed a greater amount than the staples **20030** supported by the shorter stationary staple drivers **20043**. In certain embodiments, the staples **20030** can have different unfired heights. In at least one such embodiment, staples **20030** having a shorter unfired height can be positioned on the taller stationary staple drivers **20043** while the staples **20030** having a taller unfired height can be positioned on the shorter stationary staple drivers **20043**, for example. In certain other embodiments, staples **20030** having a shorter unfired height can be positioned on the shorter stationary staple drivers **20043** while the staples **20030** having a taller unfired height can be positioned on the taller stationary staple drivers **20043**. In various embodiments, the support jaw **20040** can include several rows of stationary staple drivers **20043** having a first height and several rows of stationary staple drivers **20043** having a second height. In certain embodiments, the support jaw **20040** can include a first row of stationary staple drivers **20043** having a first height, a second row of stationary staple drivers **20043** having a second height, and one or more additional rows of stationary staple drivers **20043** having a height which is different than the first height and the second height. In various embodiments, as described above, the height of a stationary staple driver **20043** can be measured between the bottom surface **20042** and the top surface of the stationary staple driver **20043**; alternatively, the height of a stationary staple driver **20043** can be measured from the bottom surface **20042** to the bottom of the staple support groove **20044** defined therein. U.S. patent application Ser. No. 11/711,979, filed Feb. 28, 2007, entitled SURGICAL STAPLING DEVICES THAT PRODUCE FORMED STAPLES HAVING DIFFERENT LENGTHS, now U.S. Pat. No. 8,317,070, is hereby incorporated by reference in its entirety.

As discussed above, the firing member **20052** can be advanced distally in order to position the anvil **20060** in a fully closed position. In some circumstances, as also discussed above, the firing member **20052** can fully close the anvil **20060** when the top camming member **20054** of the firing member **20052** first engages the top surface **20038** of the anvil jaw **20060** and the bottom camming member **20055** first engages the bottom surface **20039** of the support jaw **20040**. In various circumstances, however, the initial distal

movement of the firing member **20052** may not be sufficient to move the anvil **20060** to its fully closed position and fully form the staples **20030**. In such circumstances, the firing member **20052** may progressively move the anvil **20060** into its fully fired position as the firing member **20052** is moved distally. In various embodiments, the firing member **20052** can first form the proximal-most staples **20030** to their fully-fired position and then progressively form each staple **20030** to its fully deformed height as the firing member **20052** passes the staples **20030**. In such embodiments, a fixed distance, or height, can be defined between the top camming member **20054** and the bottom camming member **20055** such that anvil jaw **20060** and the support jaw **20040** are closer together than the fixed height defined between the camming members **20054** and **20055**. Thus, the height of the anvil jaw **20060** can be controlled, or at least controlled in the region of the end effector proximate the camming members **20054** and **20055**. As the firing member **20052** is advanced distally, the staples **20030** of the staple cartridge **20000** can be formed to their final deformed heights until the firing member **20052** reaches the distal end of the end effector. At such point, the firing member **20052** can be retracted to its proximal, unfired position and the anvil jaw **20060** can be reopened. In some circumstances, the firing member **20052** can be retracted prior to being advanced to the distal end of the end effector.

As the cartridge deck **20010** is moved downwardly into the well **20046** from its unfired position to its fired position, referring now to FIGS. **254** and **255**, the cartridge deck **20010** can become lodged within the well **20046**. More particularly, as outlined above, the cartridge deck **20010** can engage the support jaw **20040** in an interference-fit or press-fit manner as the cartridge deck **20010** is pushed downwardly such that the cartridge deck **20010** can be held in its fired position. In certain circumstances, the staples **20030** may not be engaged with the deck **20010** when the deck **20010** is in its fired position and, thus, when the anvil jaw **20060** is reopened after the staple cartridge **20000** has been fired, the staples **20030**, the tissue T captured within the staples **20030**, and/or the tissue thickness compensator **20020** can be lifted away from the support jaw **20040** and the cartridge deck **20010**. In at least some such embodiments, the cartridge deck **20010** can remain affixed to the support jaw **20040** until the cartridge deck **20010** is removed from the support jaw **20040**. In various embodiments, as discussed above, the sidewalls of the apertures **20013** defined within the deck **20010** can be configured to engage the stationary staple drivers **20043** as the cartridge deck **20010** descends into the well **20046**. In certain embodiments, the support jaw **20040** and the cartridge deck **20010** can include other co-operating features which can create an interference fit therebetween. Such co-operating features could include apertures defined in the support jaw **20040** and downwardly-depending cones extending from the cartridge deck **20010**, for example, which cold be configured to enter into the apertures defined in the support jaw **20040** and engage the sidewalls thereof. In various embodiments, the cartridge deck **20010** can comprise a unitary piece of material which moves downwardly as the staple cartridge **20000** is being fired. In certain other embodiments, the cartridge deck **20010** can comprise several portions which can move relative to one another. In at least one such embodiment, the portions of the cartridge deck **20010** can be held together by one or more frangible connectors which can be configured to break as the staple cartridge **20000** is being compressed by the anvil jaw **20060**. In at least one embodiment, the connectors can be configured to hold the portions of the cartridge deck **20010** together when the anvil jaw **20060** is closed but break as the firing member **20052** passes thereby. In such embodiments, the connected portions of the cartridge deck **20010** can be progressively released from the cartridge deck **20010** as the firing member **20052** is moved distally. Thus, the proximal-most portions of the cartridge deck **20010** can be pushed downwardly to their fully-fired positions before the middle portions and the distal portions of cartridge deck **20010** are pushed downwardly to their fully-fired positions. As the firing member **20052** is advanced, the middle portions of the cartridge deck **20010** can be pushed downwardly to their fully-fired positions followed by the distal-most portions of the cartridge deck **20010**, for example.

In various embodiments, further to the above, the firing member **20052** can further comprise a cutting portion **20053**, such as a knife edge, for example, which can be configured to incise the tissue as the firing member is progressed from its unfired position to a fired position. The cutting portion **20053** can be positioned and arranged such that it lags the cam drivers **20054** and **20055** and passes through the longitudinal slot **20018**. In such embodiments, the cam drivers **20054** and **20055** can progressively deform the staples **20030** to the desired height, or at least assure that staples **20030** have been deformed to the desired height, as the cutting portion **20053** follows behind the drivers **20054** and **20055** and progressively cuts the tissue. In certain embodiments, referring again to FIG. **246**, the cartridge deck **20010** can comprise a plurality of portions, such as first and second sides, for example, which can be held together by one or more cuttable ties holding the plurality of portions together. In at least one such embodiment, the cartridge deck **20010** can comprise ties **20019** positioned within the slot **20018** which can be severed and/or broken by the cutting portion **20053** as the cutting portion **20053** is moved from its unfired position to its fired position. Thus, in various embodiments, the first and second portions of the cartridge deck **20010** can be progressively released from one another as the firing member **20052** is advanced. In certain embodiments, the ties **20019** may be sufficiently frangible such that they can break as the cartridge deck **20010** is pushed downwardly by the anvil jaw **20060** to deform the staples **20030**, for example. In at least one such embodiment, one or more of the ties **20019** may already be broken prior to the advancement of the firing member **20052**.

As described above, the staple cartridge **20000** can be supported on the support jaw **20040** in any suitable manner. In various embodiments, referring now to FIG. **245**, the support jaw **20040** can further comprise supports **20047** which can be configured to support the cartridge deck **20010**. In at least one such embodiment, the supports **20047** can extend vertically along the sides of the stationary staple drivers **20043** and can each comprise a top surface against which the cartridge deck **20010** can be positioned. Referring now to FIG. **246**, the cartridge deck **20010** can include ledges **20006** which can abut the supports **20047**. In at least one such embodiment, each ledge **20006** can at least partially define the end of a channel **20007** extending through the body **20011** of the cartridge deck **20010**. Referring now to FIG. **256**, each ledge **20006** can be defined by a certain thickness extending between a bottom surface **20017** of the ledge **20006** to a top surface wherein the bottom surface **20017** can contact a top portion of a support **20047**. In certain embodiments, the bottom surfaces **20017** of the ledges **20006** may not contact the supports **20047** in the unfired condition of the staple cartridge **20000**; however, in such embodiments, the bottom surfaces **20017** can come

into contact with the supports **20047** as the staple cartridge **20000** is fired and the cartridge deck **20010** is moved downwardly. When the ledges **20006** of the cartridge deck **20010** are in contact with the supports **20047**, the downward movement of the cartridge deck **20010** can be prevented, or at least inhibited, until the ledges **20006** deform and/or break thereby allowing the cartridge deck **20010** to move downwardly into its fired position. Referring to FIG. **257**, the ledges **20006** can be configured to break, fold, and/or otherwise deflect inwardly into the channels **20007**. When the ledges **20006** have been folded into the channels **20007**, sufficient clearance can exist between the cartridge deck **20010** and the stationary staple drivers **20043** to permit the cartridge deck **20010** to move relative thereto. In various embodiments, further to the above, the ledges **20006** can break, snap, and/or otherwise plastically deform, in order to permit relative movement between the cartridge deck **20010** and the support jaw **20040**. In certain embodiments, the ledges **20006** may not need to break in order to permit such relative movement. In at least one such embodiment, the ledges **20006** can be configured to flex, bend, and/or otherwise elastically deform, into the channels **20007**, for example, to permit relative movement between the cartridge deck **20010** and the support jaw **20040**.

Further to the above, regardless of whether the ledges **20060**, and/or any other suitable support members, of the cartridge deck **20010** plastically deform and/or elastically deform, the co-operation of the ledges **20006** and the supports **20047** can prevent, or at least inhibit, the downward movement of the cartridge deck **20010** until a certain force or pressure has been applied to the staple cartridge **20000** by the anvil jaw **20060** and/or the firing member **20052**. In various embodiments, the ledges **20006** can be configured to break-away, i.e., suddenly permit relative movement between the cartridge deck **20010** and the support jaw **20040**, when a predetermined force transmitted through the ledges **20006** has been reached or exceeded. In at least one embodiment, each ledge **20006** of a cartridge deck **20010** can be configured to break-away at the same predetermined force. Other embodiments are envisioned in which the ledges **20006** of a cartridge deck **20010** can be configured to break-away at different predetermined forces. In either event, such break-away features can delineate when the staple cartridge **20000** has transitioned between an unfired configuration and an at least partially-fired configuration. Referring to FIGS. **256** and **257** once again, the cartridge deck **20010** has moved toward, or broken-away toward, the bases **20032** of the staples **20030** and the bottom surface **20042** of the support jaw **20040**. In certain embodiments, the cartridge deck **20010** can break-away at the same time that the anvil jaw **20060** starts to deform the staples **20030**. In certain other embodiments, the cartridge deck **20010** can break-away at the same time that the staples **20030** are being deformed to their final deformed configurations. In various embodiments, the cartridge deck **20010** can be configured to collapse when a sufficient compressive force, or pressure, is applied thereto. In at least one embodiment, the cartridge deck **20010** can comprise a plurality of downwardly-depending supports which can be configured to abut the bottom surface **20042** of the support jaw **20040** wherein such supports can be configured to collapse when a sufficient compressive force, or pressure, is applied to, or transmitted through, the cartridge deck **20010**.

Referring to FIGS. **256** and **257** once again, the cartridge deck **20010** can collapse toward the bases **20032** of the staples **20030** and the bottom surface **20042** of the support jaw **20040**. In at least one such embodiment, the top surface **20042** of the cartridge deck **20010** can move closer to the bases **20031** of the staples **20030** as the cartridge deck **20010** is moved between an unfired position (FIG. **256**) and a fired position (FIG. **257**). In various embodiments, the top surface **20012** of the cartridge deck **20010** can be positioned above the top surfaces of the stationary staple drivers **20043** when the cartridge deck **20010** is in an unfired configuration, as illustrated in FIG. **256**, and positioned below the top surfaces of the stationary staple drivers **20043** when the cartridge deck **20010** is in a fired configuration, as illustrated in FIG. **257**. In the fired configuration of the cartridge deck **20010**, as a result, the stationary staple drivers **20043** can protrude upwardly from the cartridge deck **20010**. In at least one such embodiment, the top surface **20012** of the cartridge deck **20010** can be positioned above the bases **20031** of the staples **20030** when the cartridge deck **20010** is in its unfired configuration and, in certain embodiments, the top surface **20012** can be aligned, or at least substantially aligned, with the bases **20031** of the staples **20030** when the cartridge deck **20010** is in its fired configuration. In various embodiments, the bottom surface **20017** of the cartridge deck **20010** can be aligned, or at least substantially aligned, with the bases **20031** of the staples **20030** when the cartridge deck **20010** is in its unfired configuration and, in certain embodiments, the bottom surface **20017** can be positioned below the bases **20031** when the cartridge deck **20010** is in its fired configuration. In the unfired configuration of the cartridge deck **20010**, referring again to FIG. **257**, the bottom surface **20017** can be positioned above the bottom surface **20042** of the support jaw **20040**, as illustrated in FIG. **256**, and can contact the bottom surface **20042** when the cartridge deck **20010** is moved into its fired configuration, as illustrated in FIG. **257**. In any event, when the cartridge deck **20010** is moved downwardly toward the bottom surface **20042** of the support jaw **20040**, the cartridge deck **20010** can be moved in the direction of the bases **20031** of the staples **20030**, for example.

As discussed above, the stationary staple drivers **20043** can be configured to support the staples **20030** along straight, or at least substantially straight, rows, or lines. In such embodiments, the stationary staple drivers **20043** can also be positioned along straight, or at least substantially straight, rows. In at least one such embodiment, the support grooves **20044** defined in the stationary staple drivers **20043** can each be defined along a longitudinal axis which is collinear, or at least substantially collinear, with the longitudinal axes defined by at least some of the other support grooves **20044**. In certain embodiments, the stationary staple drivers **20043** can be configured to support the staples **20030** along at least partially curved rows. In such embodiments, the stationary staple drivers **20043** can also be positioned along curved rows. In at least one such embodiment, the support grooves **20044** defined in the stationary staple drivers **20043** can each be defined along a longitudinal axis which is not collinear with the other longitudinal axes defined by the support grooves **20044** along the curved portion of the staple row.

In various embodiments, as outlined above, the staple cartridge **20000** can be positioned on a first side of the targeted tissue and the anvil jaw **20060** can be positioned on a second, or opposite, side of the tissue. In certain circumstances, the distal ends of the support jaw **20040** and the anvil jaw **20060** can be aligned with the targeted tissue and then pushed distally such that the tissue is located between the proximal and distal ends of the staple cartridge **20000**. As also outlined above, the tissue thickness compensator **20020** of the staple cartridge **20000** can comprise various

tissue-contacting surfaces, such as surface **20021**, for example. In certain embodiments, the tissue thickness compensator **20020** may include any suitable number of bevels, radiused edges, and/or other suitable surfaces, such as lead-in surface **20028**, for example, which can facilitate the insertion of the tissue proximal to the tissue thickness compensator **20020** without dislodging the tissue thickness compensator **20020** from the staple cartridge **20000**.

The devices disclosed herein can be designed to be disposed of after a single use, or they can be designed to be used multiple times. In either case, however, the device can be reconditioned for reuse after at least one use. Reconditioning can include any combination of the steps of disassembly of the device, followed by cleaning or replacement of particular pieces, and subsequent reassembly. In particular, the device can be disassembled, and any number of the particular pieces or parts of the device can be selectively replaced or removed in any combination. Upon cleaning and/or replacement of particular parts, the device can be reassembled for subsequent use either at a reconditioning facility, or by a surgical team immediately prior to a surgical procedure. Those skilled in the art will appreciate that reconditioning of a device can utilize a variety of techniques for disassembly, cleaning/replacement, and reassembly. Use of such techniques, and the resulting reconditioned device, are all within the scope of the present application.

Preferably, the invention described herein will be processed before surgery. First, a new or used instrument is obtained and if necessary cleaned. The instrument can then be sterilized. In one sterilization technique, the instrument is placed in a closed and sealed container, such as a plastic or TYVEK bag. The container and instrument are then placed in a field of radiation that can penetrate the container, such as gamma radiation, x-rays, or high-energy electrons. The radiation kills bacteria on the instrument and in the container. The sterilized instrument can then be stored in the sterile container. The sealed container keeps the instrument sterile until it is opened in the medical facility.

Any patent, publication, or other disclosure material, in whole or in part, that is said to be incorporated by reference herein is incorporated herein only to the extent that the incorporated materials does not conflict with existing definitions, statements, or other disclosure material set forth in this disclosure. As such, and to the extent necessary, the disclosure as explicitly set forth herein supersedes any conflicting material incorporated herein by reference. Any material, or portion thereof, that is said to be incorporated by reference herein, but which conflicts with existing definitions, statements, or other disclosure material set forth herein will only be incorporated to the extent that no conflict arises between that incorporated material and the existing disclosure material.

While this invention has been described as having exemplary designs, the present invention may be further modified within the spirit and scope of the disclosure. This application is therefore intended to cover any variations, uses, or adaptations of the invention using its general principles. Further, this application is intended to cover such departures from the present disclosure as come within known or customary practice in the art to which this invention pertains.

What is claimed is:

1. A surgical stapler, comprising:

a handle, comprising:

a trigger; and

a firing assembly, wherein said trigger is configured to actuate said firing assembly;

an articulation joint;

a shaft extending from said handle, wherein said shaft comprises a knife bar operably coupled with said firing assembly, wherein said knife bar comprises:

a cam; and

a cutting edge; and

an end effector coupled to said shaft by said articulation joint, said end effector comprising:

a proximal end;

a distal end;

a support jaw, comprising:

a staple cartridge comprising staple cavities and staples stored within said staple cavities;

a support surface configured to support the staple cartridge, wherein said support surface defines a support plane; and

a displacement guide defined along an axis transverse to said support plane, wherein said displacement guide comprises a vertical slot; and

an anvil jaw, comprising:

a follower slidably received within said displacement guide, wherein said follower comprises a peg configured to be received within said vertical slot; and

an anvil surface configured to deform the staples, wherein said cam of said knife bar is configured to contact said anvil jaw and drive said anvil surface toward said support surface when said knife bar is moved from said proximal end toward said distal end of said end effector.

2. The surgical stapler of claim **1**, wherein said shaft defines a longitudinal axis, and wherein said articulation joint permits said end effector to be articulated in directions relative to said longitudinal axis.

3. A surgical stapling system, comprising:

a handle;

a shaft extending distally from said handle;

an articulation joint;

a firing system; and

an end effector connected to said shaft by said articulation joint, wherein the end effector comprises:

a first jaw;

a staple cartridge removably positioned in said first jaw, said staple cartridge comprising:

a cartridge deck;

staple cavities defined in said cartridge deck; and

staples removably stored in said staple cavities;

a firing member operably coupled to said firing system, wherein said firing member comprises at least one camming member and a knife edge; and

a second jaw movable relative to said first jaw between an open position and a closed position, wherein said second jaw comprises:

staple-forming pockets; and

at least one slot element configured to receive said at least one camming member, wherein said second jaw moves from said open position to said closed position during a progressive and longitudinal staple firing motion.

4. The surgical stapling system of claim **3**, wherein said shaft defines a longitudinal axis, and wherein said articulation joint permits said end effector to be articulated in directions relative to said longitudinal axis.

* * * * *